Window and Door Technology

Roto AL Designo

Concealed hardware
for aesthetic aluminium windows and balcony doors

Installation, maintenance and operation instructions
for aluminium profiles

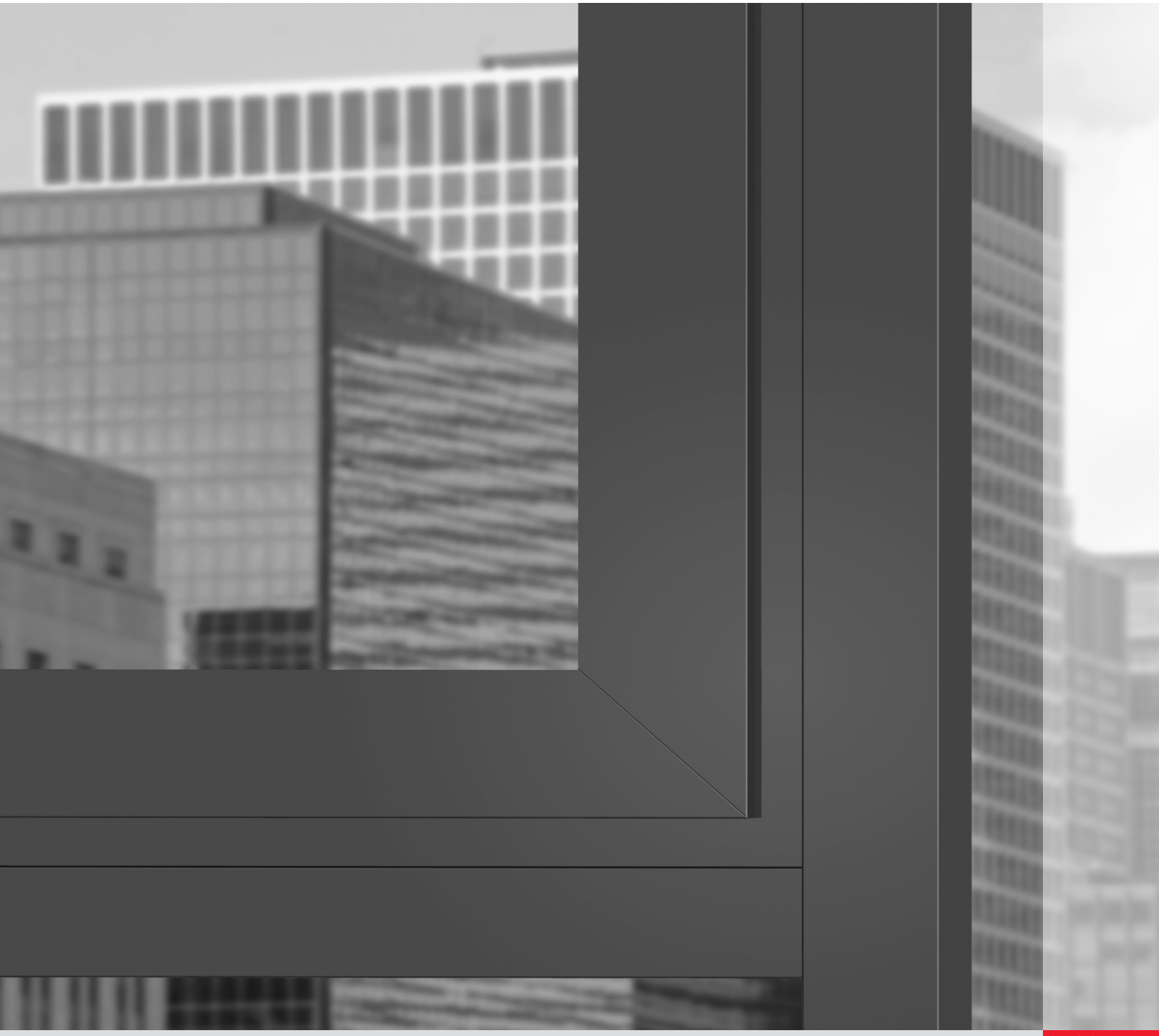

Contact

Roto Frank
Fenster- und Türtechnologie GmbH
Wilhelm-Frank-Platz 1
70771 Leinfelden-Echterdingen
Germany
Phone +49 711 7598 0
Fax +49 711 7598 253
info@roto-frank.com
www.roto-frank.com

1 General information ... 14

1.1 Version history ... 14

1.2 Instructions ... 14

1.3 Symbols ... 16

1.4 Pictographs ... 16

1.5 Product features ... 16

1.6 Abbreviations ... 17

1.7 Target groups ... 18

1.8 Target groups' obligation to give instructions ... 19

1.9 Copyright protection ... 19

1.10 Limitation of liability ... 20

1.11 Preserving the surface finish ... 20

2 Security ... 22

2.1 Presentation and structure of warning instructions ... 22

2.2 Security levels of warning instructions ... 22

2.3 Stipulated use ... 22

2.3.1 Misuse ... 23

2.3.2 Usage restriction ... 23

2.4 Stipulated use for end users ... 23

2.4.1 Misuse ... 24

2.5 Basic safety information ... 24

2.5.1 Installation ... 24

2.5.2 Use ... 25

2.5.3 Ambient conditions ... 26

2.6 Operation ... 26

3 Information on the product ... 28

3.1 General hardware characteristics ... 28

3.2 Application ranges ... 28

3.3 Application diagrams ... 28

3.3.1 Tilt&Turn hardware ... 29

3.3.1.1 100 kg ... 29

3.3.1.2 150 kg ... 30

3.3.1.3 180 kg ... 31
3.3.2 TiltFirst hardware / Tilt-Only hardware, handle at the side ... 32
3.3.2.1 100 kg ... 32
3.3.2.2 150 kg ... 33
3.3.3 Turn-Only hardware ... 34
3.3.3.1 80 kg ... 34
3.3.3.2 150 kg ... 35
3.3.3.3 180 kg ... 36
3.3.4 Tilt-Only hardware, handle at the top ... 37
3.3.4.1 100 kg ... 37
3.4 Minimum sash widths and heights ... 37
3.5 Profile cross sections ... 39
3.6 Space requirement for hardware ... 42

4 Hardware overviews ... 46
4.1 Tilt&Turn hardware ... 48
4.1.1 T&T | 80 kg ... 48
4.1.2 T&T | 150 kg ... 52
4.1.3 T&T | RC 2 | 150 kg ... 56
4.1.4 T&T | RC 3 | 150 kg ... 60
4.1.5 T&T | TiltSafe | RC 2 | 150 kg ... 64
4.1.6 T&T | 180 kg ... 68
4.1.7 T&T | RC 2 | 180 kg ... 72
4.1.8 T&T | RC 3 | 180 kg ... 76
4.2 TiltFirst hardware / Tilt-Only hardware, handle at the side ... 80
4.2.1 TF / TiSs | 150 kg ... 80
4.2.2 TF / TiSs | RC 2 | 150 kg ... 84
4.2.3 TF / TiSs | RC 3 | 150 kg ... 88
4.3 Turn-Only hardware ... 92
4.3.1 T-O rebate sash stay, couplable | 80 kg ... 92
4.3.2 T-O rebate sash stay, couplable | RC 2 | 80 kg ... 96
4.3.3 T-O rebate sash stay, couplable | RC 3 | 80 kg ... 100
4.3.4 T-O | 150 kg ... 104

4.3.5 T-O | RC 2 | 150 kg ... 108
4.3.6 T-O | RC 3 | 150 kg ... 112
4.3.7 T-O | 180 kg ... 116
4.3.8 T-O | RC 2 | 180 kg ... 120
4.3.9 T-O | RC 3 | 180 kg ... 124
4.4 Tilt-Only hardware, handle at the top ... 128
4.4.1 TiSt | 100 kg ... 128
4.4.2 TiSt | RC 2 | 100 kg ... 132
4.4.3 TiSt | RC 3 | 100 kg ... 136
4.5 Floating-mullion hardware ... 140
4.5.1 FM ... 140
4.5.2 FM-Su ... 142
4.5.3 FM-SuN ... 144
4.5.4 FM-Sh ... 146
4.5.5 FM-R ... 148
4.5.6 FM, couplable (second opening sash) | 150 kg ... 150
4.5.7 FM, couplable (second opening sash) | RC 2 | 150 kg ... 154
4.5.8 FM, couplable (second opening sash) | RC 3 | 150 kg ... 158

5 Jigs / tools ... 161
5.1 Drilling jigs ... 161
5.2 Positioning jigs ... 163
5.3 Tools ... 164
5.3.1 Hexalobular socket screwdriver ... 164
5.3.2 Extractor handle ... 165
5.3.3 Punches ... 165
5.3.3.1 Pneumatic punch ... 165

6 Large packaging for individual components ... 166
6.1 Locking components ... 166
6.1.1 Corner drives and forks ... 166
6.1.2 Deadbolt ... 168
6.1.2.1 Tilt lock bolt ... 168
6.1.2.2 Shootbolt rod ... 168

6.1.2.3 Shootbolt ... 169
6.1.3 Run-up blocks ... 169
6.1.4 Tilt striker ... 170
6.1.5 Locking components ... 171
6.2 Espagnolette and connector ... 172
6.2.1 Geared-handle ... 172
6.2.2 Flush-encased gearbox ... 173
6.2.3 Floating-mullion espagnolette ... 174
6.3 Accessories ... 175
6.3.1 Connecting rods ... 175
6.3.2 SEC connector ... 176
6.3.3 SEC rebate-clearance reduction CD ... 176
6.3.4 SEC coupler component ... 177
6.3.5 Reducing sleeve ... 177
6.3.6 Screws ... 177
6.3.6.1 Countersunk screws ... 177
6.3.6.2 Cylinder screws ... 178
6.3.7 Roto NX / NT grease ... 178

7 Large packaging for sets ... 179
7.1 Locking components ... 179
7.1.1 Tilt-Only hardware ... 179
7.1.2 Floating-mullion hardware ... 179
7.2 Hinge side ... 180
7.2.1 Corner hinge set ... 180
7.3 Espagnolette and connector ... 180
7.3.1 Flush-encased gearbox ... 180
7.3.2 Floating-mullion espagnolette ... 181
7.4 Accessories ... 182
7.4.1 Turn restrictor ... 182
7.4.2 Turn locks ... 183
7.4.3 Bullet catch ... 184
7.4.4 Night vent ... 185

7.4.5 Screws ... 186

7.4.5.1 Rivet nut set ... 186

8 Installation ... 187

8.1 Processing instructions ... 187

8.2 Screw connections ... 187

8.2.1 Screw fixing specifications for aluminium profiles ... 188

8.3 Preparing for installation ... 189

8.3.1 Preparing the connecting rods ... 189

8.3.2 Opening the sash corners ... 190

8.3.3 CL corner drive – ECC-groove ... 191

8.3.4 Connecting the coupling points ... 192

8.4 General installation ... 193

8.4.1 Drilling and routing dimensions ... 193

8.4.1.1 Sash stay 390 ... 193

8.4.1.2 Pivot rest / stay bearing ... 193

8.4.2 Sash ... 194

8.4.2.1 Installation sequence ... 194

8.4.2.2 T connector ... 195

8.4.2.3 Connector bolt, insertable ... 196

8.4.2.4 SEC espagnolette protection ... 197

8.4.2.5 Flush-encased gearbox ... 198

8.4.2.6 Cam, insertable ... 199

8.4.2.7 Cam, insertable – ECC-groove ... 200

8.4.2.8 Corner drives ... 201

8.4.3 Frame ... 202

8.4.3.1 Strikers ... 202

8.5 Tilt&Turn / TiltFirst / Tilt-Only hardware, handle at the side ... 205

8.5.1 Sash ... 205

8.5.1.1 Sash stay 390 | SH ≤ 800 mm ... 205

8.5.1.2 Tilt distance restrictor ... 207

8.5.1.3 Scissor stay guide 500, 735 ... 208

8.5.1.4 Additional stay arm | 150 kg ... 210

8.5.1.5 Additional stay arm | 180 kg ... 211
8.5.1.6 Corner hinge ... 212
8.5.1.7 Locking sleeve ... 214
8.5.2 Frame ... 215
8.5.2.1 Pivot rest ... 215
8.5.2.2 Sash stay 500, 735 ... 217
8.5.2.3 Clamp strip on sash stay 390 ... 218
8.5.2.4 Additional stay arm frame components ... 218
8.5.2.5 TiltSafe components ... 220
8.5.3 Joining the sash and frame ... 222
8.5.3.1 Connecting the pivot rest to the corner hinge ... 222
8.5.3.2 Mounting sash stay 390 ... 223
8.5.3.3 Mounting sash stay 500 ... 224
8.5.3.4 Mounting sash stay 735 ... 225
8.6 Turn-Only hardware ... 226
8.6.1 Sash ... 226
8.6.1.1 Rebate stay hinge, couplable ... 226
8.6.1.2 Rebate stay hinge ... 227
8.6.1.3 Scissor stay guide 500, 735 ... 228
8.6.1.4 Corner hinge ... 230
8.6.1.5 CL sash component ... 231
8.6.1.6 Locking sleeve ... 232
8.6.2 Frame ... 233
8.6.2.1 Pivot rest ... 233
8.6.2.2 Rebate sash stay / rebate sash stay, couplable / sash stay 735 ... 235
8.6.2.3 CL frame component ... 236
8.6.3 Joining the sash and frame ... 237
8.6.3.1 Connecting the pivot rest to the corner hinge ... 237
8.6.3.2 Mounting the rebate sash stay, couplable ... 238
8.6.3.3 Mounting the rebate sash stay ... 240
8.6.3.4 Mounting sash stay 735 ... 241
8.7 Tilt-Only hardware, handle at the top ... 242
8.7.1 Sash ... 242

8.7.1.1 CL sash component ... 242
8.7.1.2 Tilt-Only stay arm slide bar ... 243
8.7.1.3 Rebate stay hinge ... 243
8.7.1.4 Locking sleeve ... 244
8.7.2 Frame ... 245
8.7.2.1 CL frame component ... 245
8.7.2.2 Tilt-Only stay arm ... 245
8.7.2.3 Rebate sash stay ... 246
8.7.3 Joining the sash and frame ... 248
8.7.3.1 Mounting the rebate sash stay ... 248
8.7.3.2 Tilt-Only stay arm (TiSt) ... 250
8.8 Floating-mullion hardware ... 251
8.8.1 Drilling and routing dimensions ... 251
8.8.1.1 FM espagnolette, internal ... 251
8.8.1.2 Shootbolt ... 252
8.8.2 Sash ... 253
8.8.2.1 FM espagnolette ... 253
8.8.2.2 FM-Su espagnolette ... 254
8.8.2.3 FM-SuN espagnolette ... 255
8.8.2.4 FM-Sh espagnolette ... 256
8.8.2.5 FM-R espagnolette ... 257
8.8.2.6 Anti-lifting device in the floating-mullion window ... 258
8.9 Accessories ... 259
8.9.1 Drilling and routing dimensions ... 259
8.9.1.1 Roto Line AL geared-handle ... 259
8.9.1.2 Flush-encased gearbox with / without mishandling device ... 259
8.9.1.3 Window handle – standard ... 260
8.9.1.4 Flush-encased gearbox with handle without escutcheon ... 260
8.9.1.5 Turn lock ... 261
8.9.1.6 Locking plate set ... 261
8.9.2 Roto handles ... 262
8.9.2.1 Handle without escutcheon ... 262
8.9.2.2 Roto Line | window handle, standard ... 263

8.9.2.3 Roto Line | window handle for geared-handle 263
8.9.3 Turn lock and locking plate set 264
8.9.4 Bullet catch 265
8.9.5 Turn restrictor 267
8.9.5.1 Turn restrictor with stop 267
8.9.5.2 Turn restrictor, braked, damped 268
8.9.6 Night vent 269
8.9.7 Load transfer 270

9 Installation drawings 273
9.1 Striker positions 273
9.1.1 Explanation 273
9.1.2 Standard 274
9.2 Tilt&Turn hardware 276
9.2.1 Explanation 276
9.2.2 T&T | 80 kg 277
9.2.3 T&T | 150 kg 278
9.2.4 T&T | 150 kg | RC 2 279
9.2.5 T&T | 150 kg | RC 3 280
9.2.6 T&T additional stay arms | 150 kg 281
9.2.7 T&T | 150 kg | TiltSafe | RC 2 282
9.2.8 T&T | 180 kg 283
9.2.9 T&T | 180 kg | RC 2 284
9.2.10 T&T | 180 kg | RC 3 285
9.2.11 T&T additional stay arms | 180 kg 286
9.3 TiltFirst hardware 287
9.3.1 Explanation 287
9.3.2 TF / TiSs | 150 kg 288
9.3.3 TF / TiSs | 150 kg | RC 2 289
9.3.4 TF / TiSs | 150 kg | RC 3 290
9.3.5 TF additional stay arms | 150 kg 291
9.4 Turn-Only hardware 292
9.4.1 Explanation 292

9.4.2 T-O rebate sash stay, couplable | 80 kg ... 293
9.4.3 T-O rebate sash stay, couplable | RC 2 | 80 kg ... 294
9.4.4 T-O rebate sash stay, couplable | RC 3 | 80 kg ... 295
9.4.5 T-O | 150 kg ... 296
9.4.6 T-O | 150 kg | RC 2 ... 297
9.4.7 T-O | 150 kg | RC 3 ... 298
9.4.8 T-O | 180 kg ... 299
9.4.9 T-O | 180 kg | RC 2 ... 300
9.4.10 T-O | 180 kg | RC 3 ... 301
9.5 Tilt-Only hardware ... 302
9.5.1 Explanation ... 302
9.5.2 TiSt | 100 kg ... 303
9.5.3 TiSt | 100 kg | RC 2 ... 304
9.5.4 TiSt | 100 kg | RC 3 ... 305
9.5.5 TiSt night vent ... 306
9.6 Floating-mullion hardware ... 307
9.6.1 Explanation ... 307
9.6.2 FM ... 309
9.6.3 FM-Su and FM-R ... 310
9.6.4 FM-SuN and FM-Sh ... 311
9.6.5 FM, couplable | SEC locking | RC 2 / RC 3 ... 312
9.6.6 FM, couplable | 150 kg ... 313
9.6.7 FM, couplable | 150 kg | RC 2 ... 314
9.6.8 FM, couplable | 150 kg | RC 3 ... 315

10 Adjustment ... 316
10.1 Gasket compression adjustment ... 316
10.1.1 Cam, insertable ... 316
10.2 Tilt&Turn hardware ... 317
10.2.1 Lateral adjustment ... 317
10.2.1.1 Sash stay 390 ... 317
10.2.1.2 Sash stay 500, 735 ... 318
10.2.1.3 Corner hinge ... 318

10.2.2 Height adjustment ... 319
10.2.2.1 Corner hinge ... 319
10.3 TiltFirst hardware ... 320
10.3.1 Lateral adjustment ... 320
10.3.1.1 Sash stay 500, 735 ... 320
10.3.1.2 Corner hinge ... 321
10.3.2 Height adjustment ... 321
10.3.2.1 Corner hinge ... 321
10.4 Turn-Only hardware ... 322
10.4.1 Lateral adjustment ... 322
10.4.1.1 Corner hinge ... 322
10.4.1.2 Rebate stay hinge, couplable, and rebate stay hinge ... 323
10.4.1.3 Sash stay 735 ... 324
10.4.2 Height adjustment ... 325
10.4.2.1 Corner hinge ... 325
10.4.3 Gasket compression adjustment ... 325
10.4.3.1 Rebate stay hinge | 150 kg ... 325

11 Operation ... 326
11.1 Operating information ... 326
11.1.1 Handle position with Tilt&Turn hardware ... 326
11.1.2 Handle position with TiltFirst hardware ... 326
11.1.3 Handle position with Turn-Only hardware ... 327
11.1.4 Handle position with Tilt-Only hardware ... 327
11.1.5 Incorrect position ... 327
11.2 Fault assistance ... 328

12 Maintenance ... 329
12.1 Maintenance intervals ... 329
12.2 Cleaning ... 330
12.3 Care ... 330
12.3.1 Roto AL Designo ... 331
12.4 Performance test ... 332
12.5 Repair ... 332

12.6 Preventative measures....332

13 Dismantling....334

13.1 Handle....334

13.2 Flush-encased gearbox....335

13.3 Load transfer....335

13.4 Sash stay 500....335

13.5 Sash stay 735....336

13.6 FM – second opening sash....337

14 Transport....340

14.1 Transporting elements and hardware....340

14.2 Storing the hardware....341

14.3 Transport safety device....341

15 Disposal....342

15.1 Disposing of packaging....342

15.2 Disposing of hardware....342

1 General information

1.1 Version history

Version	Date	Changes
v0	31.03.2015	Summary of all folded installation plans
v1	26.08.2015	
v2	02.11.2017	
v3	27.03.2018	
v4	31.01.2021	**IMO restructured:** ■ Division according to opening types removed and moved to the "Hardware overviews", "Installation", "Installation drawings" and "Adjustment" chapters. ■ "Large packaging for individual components" and "Large packaging for sets" chapters added. ■ Torques standardised. **New content:** ■ SH application ranges up to 3000 mm (where possible) ■ T&T hardware overview | TiltSafe | RC 2 | 150 kg **Hardware overviews amended:** ■ Standardised classification according to basic set, espagnolette and connector, height-dependent components, width-dependent components, weight-dependent components, optional ■ Required order quantity (🛒) **Installation changed:** Application diagrams and installation drawings added and changed. Table of minimum sash widths and heights changed. Space requirement for hardware changed. Contents of T connector set changed (espagnolette support must be ordered separately). Packaging units changed. Connecting rod fixed dimensions changed. Installation added and changed.

1.2 Instructions

This manual contains important information, instructions, application diagrams (max. sash sizes and weights) and assembly instructions for the installation, maintenance and operation of hardware.

The information and instructions contained in this document refer to products belonging to the Roto hardware system named on the front page.

All steps must be completed in sequence.

The following document applies in addition to these instructions:

- Handles catalogue: CTL_1
- ift guideline "Erstellung von Anwendungsdiagrammen für Dreh- und Drehkipp-Beschläge" (Creating application diagrams for Turn-Only and Tilt&Turn hardware components)

The following guidelines also apply:

Gütegemeinschaft Schlösser und Beschläge e.V.

- Directive TBDK: Attachment of supporting fitting components for turn-only and tilt&turn fittings
- Directive VHBE: Hardware for windows and balcony doors – Guidelines/ advice for end-users
- Directive VHBH: Hardware for windows and balcony doors – Guidelines/ advice on the product and on liability

VFF (German Window and Facade Association)

- TLE.01: Correct handling of ready-to-install windows and external doors during transport, storage and installation
- WP.01: Maintenance of windows, facades and external doors – Maintenance, care and inspection – Information for sales
- WP.02: Maintenance of windows, facades and external doors – Maintenance, care and inspection – Measures and documents
- WP.03: Maintenance of windows, facades and external doors – Maintenance, care and inspection – Maintenance agreement

Additional guidelines

- Instructions and information issued by profile manufacturers, e.g. manufacturers of windows and balcony doors
- Instructions and information issued by screw manufacturers
- The applicable regulations, directives and national laws

Storing the instructions

These instructions are an important part of the product. The instructions must be stored so that they are always to hand.

Explanation of the markings

The manual uses the following markings for emphasis (e.g. in figures or instructions):

Marking	Meaning
	Sash
	Frame
	Drill holes, routing or screw positions
	Unaffected components Indirectly affected components
	Components that have just been described Arrows or movements
1	Item number
[1]	Legend
[A]	Steps

INFO
Any dimensions without a unit in the instructions are given in millimetres (mm). Other units of measurement are clearly indicated by the presence of the differing unit.

INFO
Figures are provided in the right-hand version (DIN 107).

1.3 Symbols

Symbol	Meaning
■	First-level list
□	Second-level list
→	(Cross-)reference
▷	Result
▶	Unnumbered step
1.	Numbered step
a.	Numbered second-level step
⇨	Requirement

1.4 Pictographs

Symbol	Meaning
	Turn-Only
	Tilt&Turn
	TiltFirst
	Tilt-Only
	Aluminium

1.5 Product features

Symbol	Meaning
#	Quantity
	Order quantity
	Description
	Width
	Colour
	Colour code, Roto
	Sash width
	Sash weight
	Sash height

Symbol	Meaning
	Size
	Height
	Information
	Tilt distance
	Clamping strip version
	Length
№	Material number
	Installation type
	Position
	Frame groove
[*]	Collective call-out
	Type of screws
	Packaging unit

1.6 Abbreviations

Abbreviation	Meaning
Fig.	Figure
AL	Aluminium
CTL	Catalogue
TR	Turn restrictor
TR size 1	with damped / braked turn restrictor size 1
TR size 2	with damped / braked turn restrictor size 2
T-O	Turn-Only hardware
DIN L / R	DIN left / right
T&T	Tilt&Turn hardware
FG	Flush-encased gearbox
CD	Corner drive
SW	Sash width
S.kg	Sash weight
SH	Sash height
HH	Handle height
ESP	Espagnolette
IMO	Installation instructions
incl.	including
ISR	Hexalobular socket
TiS	Tilt-Only hardware
TiSt	Tilt-Only hardware, handle at the top
TiSs	Tilt-Only hardware, handle at the side
kN	Kilonewtons
kg	Kilograms
compl.	complete
L	Left
M	Metric
m^2	Square metres
Max.	Maximum

Abbreviation	Meaning
Min.	Minimum
mm	Millimetres
CL	Centre lock
Nm	Torque
Not sh.	Not shown
R	Right
FWi	Frame width, internal
RC	Resistance class
FHi	Frame height, internal
SP. COL.	Special colour
SEC	Security
FM	Floating-mullion espagnolette, internal
FM-Su	Floating-mullion espagnolette, surface-mounted
FM-SuN	Floating-mullion espagnolette, surface-mounted, narrow version
FM-Sh	Floating-mullion shootbolt
FM-R	Floating-mullion espagnolette, slider
SW	Key size
CR1	Connecting rod designation, e.g. connecting rod 1
TF	TiltFirst hardware
VB	Multi-ported striker

1.7 Target groups

The information in this document is directed at the following target groups:

Hardware dealers

The “hardware dealers” target group includes all companies and individuals that purchase hardware from hardware manufacturers for resale, without modifying or further processing the hardware.

Window and balcony door manufacturers

The “window and balcony door manufacturers” target group includes all companies and individuals that purchase hardware from hardware manufacturers or hardware dealers and further process the hardware by integrating it in windows and balcony doors.

Building element dealers or installation companies

The “building element dealers or installation companies” target group includes all companies and individuals that purchase windows and balcony doors from window and balcony door manufacturers for resale and for installation in construction projects, without modifying the windows or balcony doors.

Builders

The “builders” target group includes all companies and individuals who place orders for the manufacture of windows and balcony doors for installation in their construction projects.

End users

The “end users” target group includes all individuals who use the installed windows and balcony doors.

1.8 Target groups' obligation to give instructions

INFO

Each target group must fulfil their obligation to give instructions in full.

Unless specified otherwise in the text below, documents and information can be passed on as a printed document, on a data storage device or via the Internet.

Responsibility of hardware dealers

Hardware dealers must pass the following documents on to the window and balcony door manufacturer:

- Catalogue
- Installation, maintenance and operation instructions
- Directive on attachment of supporting fitting components for turn-only and tilt&turn fittings (TBDK)
- Guidelines/advice on the product and on liability (VHBH)
- Guidelines/advice for end-users (VHBE)

Responsibility of the window and balcony door manufacturer

The window and balcony door manufacturer must pass the following documents on to building element dealers or the builder, even if a subcontractor (installation company) is involved:

- Installation, maintenance and operation instructions
- Directive on attachment of supporting fitting components for turn-only and tilt&turn fittings (TBDK)
- Guidelines/advice on the product and on liability (VHBH)
- Guidelines/advice for end-users (VHBE)

They must ensure that the end users are provided with the documents and information intended for them in printed format.

Responsibility of building element dealers and the installation company

Building element dealers must pass the following documents on to the builder, even if a subcontractor (installation company) is involved:

- Installation, maintenance and operation instructions (with a focus on hardware)
- Guidelines/advice on the product and on liability (VHBH)
- Guidelines/advice for end-users (VHBE)

Responsibility of the builder

The builder must pass the following documents on to the end user:

- Installation, maintenance and operation instructions (with a focus on hardware)
- Guidelines/advice for end-users (VHBE)

1.9 Copyright protection

1.10 Limitation of liability

All information and instructions contained in this document have been compiled in consideration of the applicable standards and regulations, the latest developments in technology and many years of knowledge and experience.

The hardware manufacturer assumes no liability for damage caused by:

- Failure to comply with this document and all product-specific documents and other applicable directives (see the chapters entitled “Security” and “Stipulated use”).
- Improper use / misuse (see the chapters entitled “Security” and “Stipulated use”).
- Insufficient invitation to tender, non-compliance with installation specifications and non-compliance with the application diagrams (where available).
- Increased contamination.

Claims made by third parties against the hardware manufacturer on account of damage resulting from misuse or failure to comply with the obligation to give instructions on the part of hardware dealers, window, door and balcony door manufacturers and building element dealers or the builder are passed on accordingly.

The obligations agreed in the delivery contract, the general terms and conditions, the hardware manufacturer’s terms and conditions of delivery and the legal provisions applicable when the contract was concluded shall apply.

The warranty only covers original Roto components.

We reserve the right to make technical changes as part of improvement to performance characteristics and further development.

1.11 Preserving the surface finish

ATTENTION

Surface treatments may cause property damage.

Surface treatments (e.g. painting and varnishing) on elements can damage components or prevent them from working properly.

- For masking, only use adhesive tape that does not damage the paint coats. Consult the manufacturer if in doubt.
- Protect components against direct contact with the surface treatment.
- Protect components against contamination.

ATTENTION

Using incorrect cleaning agents and sealing compounds may cause property damage.

Cleaning agents and sealing compounds may damage the surfaces of components and gaskets.

- Do not use aggressive or flammable liquids, acidic cleaners or abrasive cleaners.
- Only use mild, pH-neutral cleaning agents that have been diluted.
- Apply a thin protective film to the components, for example using a cloth soaked in oil.
- Avoid aggressive vapours (e.g. produced by formic acid, acetic acid, ammonia, amine compounds, ammonia compounds, aldehyde, carbolic acid, chlorine, tannic acid) around the element.
- Do not use any acetic acid-crosslinking or acid-crosslinking sealing compounds or those with the aforementioned constituents as both direct contact with the sealing compound and its fumes can corrode the surface of the components.

ATTENTION

Contamination may cause property damage.

Contamination prevents components working properly.

- Remove deposits and contamination caused by construction materials (e.g. plaster, gypsum).
- Keep components free of deposits and contaminants.

ATTENTION

(Permanently) damp room air may cause property damage.

Damp room air can lead to mould growth and corrosion caused by condensation.

- Provide adequate ventilation for components, particularly during the construction phase.
- Intensively air out the room several times per day by opening all elements for approximately 15 minutes. If intensive airing is not an option, place the elements in the tilt position and provide airtight masking inside the room, e.g. if there is fresh screed that cannot be walked on or must not be exposed to draughts. Discharge any humidity present in the room air to the outside using condensation dryers.
- Establish a ventilation plan for more complex construction projects if necessary.
- Provide adequate ventilation during holiday periods as well.

2 Security

This manual contains instructions relating to safety. The principal safety information in this chapter includes information and instructions relevant to the safe use or maintaining the safe condition of the product. Warning instructions that relate to handling warn of residual risks and are located before steps that are relevant to safety.

- Follow all of the instructions in order to prevent personal injury and property and environmental damage.

2.1 Presentation and structure of warning instructions

The warning instructions relate to individual actions and are structured as follows with a warning symbol:

DANGER

Nature and source of the danger.

Explanation and description of the danger and the implications.

- Measures to take to avert the danger.

2.2 Security levels of warning instructions

The warning instructions that relate to handling are identified differently according to the severity of the associated danger. The signal words and the associated warning symbols used are clarified below.

DANGER

Immediate risk of death or serious injuries.

- Observe these warning instructions to avoid personal injuries.

WARNING

Potential risk of death or serious injuries.

- Observe these warning instructions to avoid personal injuries.

CAUTION

Risk of injuries

- Observe these warning instructions to avoid personal injuries.

ATTENTION

Reference to property or environmental damage.

- Observe these warning instructions to avoid property or environmental damage.

2.3 Stipulated use

Turn-Only and Tilt&Turn hardware components are one-hand operation, Turn-Only and Tilt&Turn hardware components for windows and balcony doors in structural engineering. This hardware is used to move window sashes and balcony door sashes to a turned position by actuating a hand lever or a tilt position which is restricted by the scissor stay version. Turn-Only and Tilt&Turn hardware components may be used on vertically installed windows and balcony doors made of timber, PVC, aluminium or steel, or corresponding combinations of the aforementioned materials. Turn-Only and Tilt&Turn hardware components in the sense of this definition close windows and balcony door sashes or move them into various ventilation positions.

During the closing process, the gasket counter force must generally be overcome.

Stipulated use also includes compliance with all safety information and specifications contained in these instructions, the other applicable documents and the applicable regulations, directives and national laws.

2.3.1 Misuse

Any use and processing of the products that goes beyond or differs from the stipulated use is considered misuse and can lead to hazardous situations.

WARNING

Misuse may pose a risk of death!

Misuse and incorrect installation of hardware can lead to serious injuries.

- Only use hardware combinations that have been approved by the hardware manufacturer.
- Only use original accessories or those that have been approved by the hardware manufacturer.
- Note the product-related documentation → *from page 14*.

2.3.2 Usage restriction

Opened sashes in windows and balcony doors, and windows and balcony door sashes that are unlocked or placed in ventilation positions, only have a shielding effect. They do not meet the following requirements:

- Joint sealing
- Driving rain impermeability
- Sound insulation
- Thermal insulation
- Burglary inhibition

INFO

Windows built with security strikers for tilt ventilation fulfil the burglary inhibition function in tilt mode.

2.4 Stipulated use for end users

For windows or balcony doors with Turn-Only or Tilt&Turn hardware, windows or balcony door sashes can be moved to a turned position by operating a hand lever or to a tilt position restricted by the scissor stay version.

When closing a sash and locking the hardware, the gasket counter force must generally be overcome.

WARNING

Opening and closing sashes in an uncontrolled manner may pose a risk of death!

Opening and closing the sash in an uncontrolled manner may lead to serious injuries.

- Ensure that the sash does not collide with the frame, opening restrictor (buffer) or other sashes when it is moved into the fully open or closed position.
- Ensure that the sash is slowly guided by hand throughout its entire movement range, until it has been brought into a fully closed or opening position.

ATTENTION

Opening and closing sashes in an uncontrolled manner may result in property damage.

Opening and closing the sash in an uncontrolled manner may cause the element to malfunction.

- Ensure that the sash does not collide with the frame, opening restrictor (buffer) or other sashes when it is moved into the fully open or closed position.
- Ensure that the sash is slowly guided by hand throughout its entire movement range, until it has been brought into a fully closed or opening position.

Any use and processing of the products that goes beyond or differs from the stipulated use is considered misuse and can lead to hazardous situations.

No claims of any kind can be made on account of damage resulting from failure to comply with the stipulated use.

2.4.1 Misuse

Any use and processing of the products that goes beyond or differs from the stipulated use is considered misuse and can lead to hazardous situations.

WARNING

Misuse may pose a risk of death!

Misuse and incorrect installation of hardware can lead to serious injuries.

- Only use hardware combinations that have been approved by the hardware manufacturer.
- Only use original accessories or those that have been approved by the hardware manufacturer.
- Note the product-related documentation → *from page 14*.

2.5 Basic safety information

The following hazards may arise when handling the product:

2.5.1 Installation

Incorrect installation poses an immediate risk of death or serious injuries.

Incorrect installation or assembly of hardware can lead to hazardous situations or property damage. Depending on the height of the fall, this can result in serious to life-threatening injuries and glass breakage.

- Only use hardware combinations that have been approved by the hardware manufacturer.
- Only use original accessories or those that have been approved by the hardware manufacturer.
- Always have installation performed by a specialist company.

Heavy loads pose a risk of injury.

Lifting and carrying heavy loads may lead to injuries in the event of a fall or physical overexertion.

- Note the applicable accident prevention regulations.

- Transport heavy loads with two people and use suitable transportation means (such as an industrial truck).

Physical strain may cause damage to health.

Moving heavy loads for extended periods leads to physical injury in the long term.

- When carrying and lifting by hand, comply with a maximum weight of 25 kg for men and 10 kg for women.
- Carry and lift even small loads with an ergonomically correct posture.

2.5.2 Use

Falls from open windows and balcony doors present an immediate risk of death and pose the risk of serious injuries.

Opened sashes of windows and balcony doors create a danger zone. Depending on the height of the fall, this can result in serious to life-threatening injuries and glass breakage.

- Take care when in the vicinity of open windows and balcony doors.
- Keep children and anyone unable to understand the risks away from the hazardous area.

Trapping body parts in the opening between sash and frame may lead to serious injuries.

Gripping between the sash and frame when closing windows and balcony doors poses the risk of crushing injuries.

- When closing windows and balcony doors, never grip between the sash and frame and always exercise caution.
- Keep children and anyone unable to understand the risks away from the hazardous area.

Opening and closing sashes improperly poses the risk of injury and property damage.

Incorrect opening and closing of sashes can result in serious injuries and substantial property damage.

- When moving the sash, ensure that it will not slam against the frame or other sashes once fully opened or closed.
- Ensure that the sash is slowly guided by hand throughout its entire movement range, until it has been brought into a fully closed or opening position.
- When closing a sash and locking the hardware, the gasket counter force must be overcome.

Misuse poses a risk of injury and property damage.

Misuse can lead to hazardous situations and may destroy the hardware, frame materials or other individual components within the windows or balcony doors.

- Do not introduce any obstacles in the opening area between the frame and window or balcony door sashes.
- Do not place additional loads on windows and balcony door sashes.

- Refrain from intentionally or uncontrollably slamming or pushing the window or balcony door sash against the window reveal.

Improper maintenance poses the potential risk of injury and property damage.

Windows and balcony doors, including the hardware, require expert maintenance (care, cleaning, maintenance and inspection) in order to guarantee their proper condition and safe use.

- Keep the hardware free of deposits and contaminants.
- Carry out care and cleaning tasks as specified in these instructions.
- Always have regular maintenance, adjustment and repair work carried out by a specialist company.

2.5.3 Ambient conditions

Physical and chemical influences may result in property damage.

Hardware components can be permanently damaged to the point that they can no longer function in a saline, aggressive or corrosive environment.

- Do not use the hardware components in a saline, aggressive or corrosive environment.
- Carry out care and cleaning tasks as specified in these instructions.
- Corrosion protection must be inspected by an authorised specialist company as part of regular maintenance work.

Moisture may cause property damage.

Depending on the outside temperature, relative humidity of the room air and installation conditions for the windows and balcony doors, a temporary build-up of condensation may occur. This can lead to corrosion on the hardware and mould growth on the frame or wall. Ambient conditions that are too damp, particularly during the construction phase, can lead to timber elements warping.

- Avoid preventing the circulation of air (e.g. due to deep reveals, curtains and unfavourable positioning of heaters or the like).
- Intensively air out the room several times per day.

  Open all windows and balcony doors for approximately 15 minutes so that the air in the room can be completely replaced.
- Provide adequate ventilation during holiday periods as well.
- Create a ventilation plan for construction projects if necessary.

2.6 Operation

The safety symbols and markings and the associated warning instructions explained below apply to the safe operation of windows and balcony doors.

Safety symbols and markings

Symbol	Meaning
	**Falls from open windows and balcony doors present an immediate risk of death and pose the risk of serious injuries.** Take care when in the vicinity of open windows and balcony doors. Keep children and anyone unable to understand the risks away from the hazardous area.

Symbol	Meaning
	**Trapping body parts in the opening between sash and frame may lead to serious injuries.** When closing windows and balcony doors, never grip between the sash and frame and always exercise caution. Keep children and anyone unable to understand the risks away from the hazardous area.
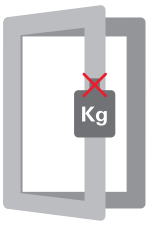	**Placing additional loads on the sash may lead to minor injuries and property damage.** Avoid placing additional loads on the sash.
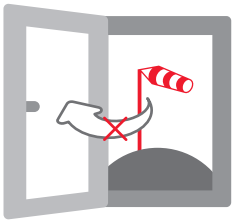	**The impact of wind may lead to minor injuries and property damage.** Avoid exposing the open sash to wind. Close and lock the window and balcony door sash in windy or draughty conditions.
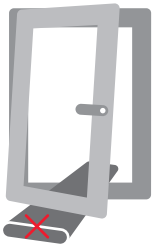	**Introducing obstacles into the opening between sash and frame may result in minor injuries and property damage.** Avoid introducing obstacles into the opening between sash and frame.
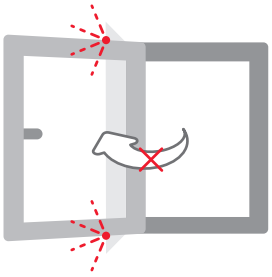	**Pressing the sash against the edge of an opening (reveal) may pose a risk of minor injuries and cause property damage** Refrain from pressing the sash against the edge of an opening (reveal).

3 Information on the product

3.1 General hardware characteristics

- Hinge side / sash stay can be clamped in the frame groove using preassembled clamp strips with clamping blocks.
- Integrated piercing screw to prevent horizontal movement.
- Preassembled sash stay with integrated anti-slam device and lateral adjustment.
- Sash installation in tilted state.
- Load transfer for sash weights > 100 kg (with T-O | 150 kg: > 80 kg).
- Centre locks can be placed at any position thanks to the insertable locking cams.
- Burglary inhibition up to RC 3 is possible (DIN EN 1627-1630).
- Corrosion resistance in accordance with DIN EN 1670: class 5 (480 +1 h).
- Hardware certified in accordance with QM 328.

Components

- Geared-handle (optionally lockable window handles 100 Nm)
- Service handle with separate service handle (handle without escutcheon)
- Flush-encased gearbox with / without mishandling device (window handles optionally lockable 40 / 100 Nm)
- Handle without escutcheon for flush-encased gearbox (optionally lockable)
- Concealed floating-mullion sash hardware in the following variants:
  - Floating-mullion espagnolette, internal (FM)
  - Floating-mullion shootbolt (FM-Sh)
  - Floating-mullion espagnolette, surface-mounted (FM-Su)
  - Floating-mullion espagnolette, surface-mounted, narrow version (FM-SuN)
  - Floating-mullion espagnolette, slider (FM-R)
- Use of turn restrictor with stop SW ≥ 1200 mm
- Use of turn restrictor (damped, braked) SW ≥ 1200 mm
- Turn lock with cylinder lock, lockable
- Night vent
- Bullet catch

Adjustment

- The gasket compression can be adjusted by eccentric cams.
- Sash stay 390: lateral adjustment on the scissor stay rod (-1.5 mm).
- Sash stay 500 / 735: lateral adjustment on the scissor stay guide (±2 mm).
- Lateral adjustment on the corner hinge in the installed state (-1 / +2 mm).
- Turn-Only sash with rebate sash stay and integrated lateral adjustment, passive concealed locks on the hinge side.
- Turn-Only sash with couplable rebate sash stay and integrated lateral adjustment for active locking points (in conjunction with CL corner drive) on the hinge side.
- Height adjustment on the corner hinge in the installed state (-0.5 / +2 mm).

3.2 Application ranges

- Overlap width 21.5 - 22 mm
- Rebate clearance: 11.5 - 12 mm
- Hardware axis: 10 mm
- Frame groove: V.01 and V.02
- Operating range: -20 °C to +50 °C

3.3 Application diagrams

The following application diagrams show the minimum and maximum application ranges. The sash dimensions are dependent on a number of factors. This is why the associated application ranges are found at the start of each hardware overview.

For interpolation (working out missing intermediate values), it is absolutely necessary to observe the specifications from the applicable ift guideline “Erstellung von Anwendungsdiagrammen für Dreh- und Drehkipp-Beschläge” (Creating application diagrams for Turn-Only and Tilt&Turn hardware components).

INFO
The specified filling weight **GG** refers to all filling materials that are suitable for use in the fenestration industry. This includes glazing with any type of structure and infill panels made from different materials and material combinations.

3.3.1 Tilt&Turn hardware

3.3.1.1 100 kg

Without load transfer

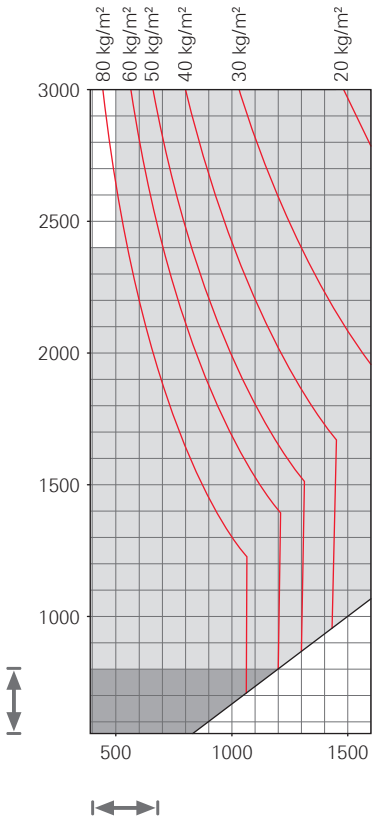

= Impermissible application range

With tilt distance restrictor SH ≤ 800 mm

Calculation basis for application diagram: IFT tool

Deductible dimension of glass = 20 mm

(Sash) profile weight = 2 kg/m

INFO
Lower deductible dimensions of glass or higher profile weights require a separate assessment.

Information on the RC sash widths → *from page 37*

Evidence on the attachment of load-bearing components to the window system by the window manufacturer in accordance with TBDK with the following force:

- on the stay bearing 2710 N
- on the pivot rest 2890 N

The specifications in the application diagram refer to the glass weight in kg/m².

1 mm/m² glass thickness ≙ 2.5 kg

			Application range
	Sash width	Sash stay 390	390 – 500 mm
		Sash stay 500	500 – 735 mm
		Sash stay 735	735 – 1200 mm
		Sash stay 735 + turn restrictor	1200 – 1300 mm
		Sash stay 735 + turn restrictor + additional stay arm	1300 – 1600 mm
	Sash height	Sash stay 390	555 – 2400 mm
		Sash stay 500 / sash stay 735	555 – 3000 mm
	Sash weight	Sash stay 390 (glass weight max. 65 kg/m²)	Max. 80 kg
		Sash stay 500 / sash stay 735	Max. 100 kg

3.3.1.2 150 kg

With load transfer

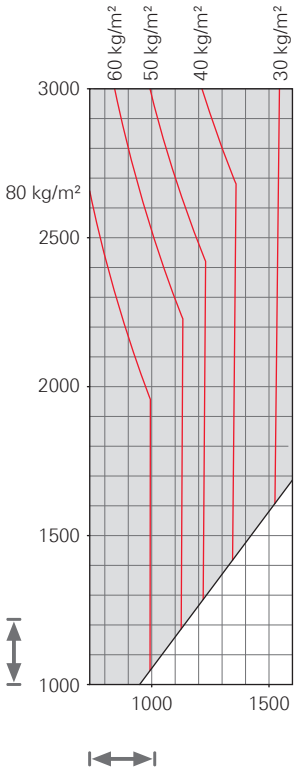

☐ = Impermissible application range

Calculation basis for application diagram: IFT tool

Deductible dimension of glass = 20 mm

(Sash) profile weight = 2 kg/m

INFO

Lower deductible dimensions of glass or higher profile weights require a separate assessment.

Information on the RC sash widths → *from page 37*

Evidence on the attachment of load-bearing components to the window system by the window manufacturer in accordance with TBDK with the following force:

- on the stay bearing 4200 N
- on the pivot rest 4340 N

The specifications in the application diagram refer to the glass weight in kg/m².

1 mm/m² glass thickness ≙ 2.5 kg

			Application range
	Sash width	Sash stay 735	735 – 1200 mm
		Sash stay 735 + turn restrictor	1200 – 1300 mm
		Sash stay 735 + turn restrictor + additional stay arm	1300 – 1600 mm
	Sash height		1000 – 3000 mm
	Sash weight		Max. 150 kg

3.3.1.3 180 kg

With load transfer and turn restrictor

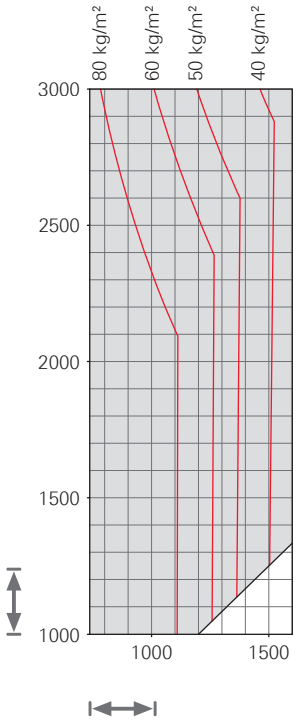

☐ = Impermissible application range

Calculation basis for application diagram: IFT tool

Deductible dimension of glass = 20 mm

(Sash) profile weight = 2 kg/m

INFO

Lower deductible dimensions of glass or higher profile weights require a separate assessment.

Information on the RC sash widths → *from page 37*

Evidence on the attachment of load-bearing components to the window system by the window manufacturer in accordance with TBDK with the following force:

- on the stay bearing 5000 N
- on the pivot rest 5200 N

The specifications in the application diagram refer to the glass weight in kg/m².

1 mm/m² glass thickness ≙ 2.5 kg

			Application range
	Sash width	Sash stay 735 (180 kg) + turn restrictor	735 – 1300 mm
		Sash stay 735 (180 kg) + turn restrictor + additional stay arm	1300 – 1600 mm
	Sash height		1000 – 3000 mm
	Sash weight		Max. 180 kg

3.3.2 TiltFirst hardware / Tilt-Only hardware, handle at the side

3.3.2.1 100 kg

Without load transfer

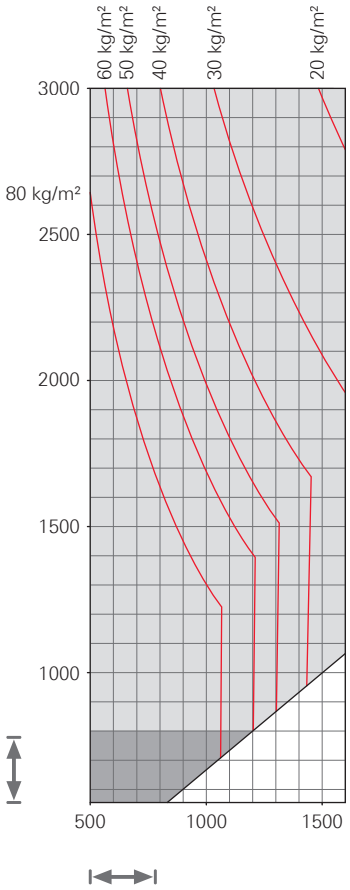

= Impermissible application range

With tilt distance restrictor SH ≤ 800 mm

Calculation basis for application diagram: IFT tool

Deductible dimension of glass = 20 mm

(Sash) profile weight = 2 kg/m

INFO

Lower deductible dimensions of glass or higher profile weights require a separate assessment.

Information on the RC sash widths → *from page 37*

Evidence on the attachment of load-bearing components to the window system by the window manufacturer in accordance with TBDK with the following forces:

- on the stay bearing 2710 N
- on the pivot rest 2890 N

The specifications in the application diagram refer to the glass weight in kg/m².

1 mm/m² glass thickness ≙ 2.5 kg

			Application range
	Sash width	Sash stay 500	500 – 735 mm
		Sash stay 735	735 – 1200 mm
		Sash stay 735 + turn restrictor	1200 – 1300 mm
		Sash stay 735 + turn restrictor + additional stay arm	1300 – 1600 mm
	Sash height		555 – 3000 mm
	Sash weight		Max. 100 kg

3.3.2.2 150 kg

With load transfer

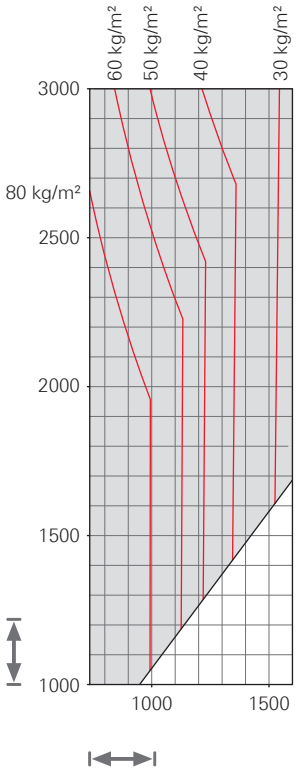

= Impermissible application range

Calculation basis for application diagram: IFT tool

Deductible dimension of glass = 20 mm

(Sash) profile weight = 2 kg/m

INFO

Lower deductible dimensions of glass or higher profile weights require a separate assessment.

Information on the RC sash widths → *from page 37*

Evidence on the attachment of load-bearing components to the window system by the window manufacturer in accordance with TBDK with the following force:

- on the stay bearing 4200 N
- on the pivot rest 4340 N

The specifications in the application diagram refer to the glass weight in kg/m².

1 mm/m² glass thickness ≙ 2.5 kg

			Application range
	Sash width	Sash stay 735	735 – 1200 mm
		Sash stay 735 + turn restrictor	1200 – 1300 mm
		Sash stay 735 + turn restrictor + additional stay arm	1300 – 1600 mm
	Sash height		1000 – 3000 mm
	Sash weight		Max. 150 kg

3.3.3 Turn-Only hardware

3.3.3.1 80 kg

Without load transfer

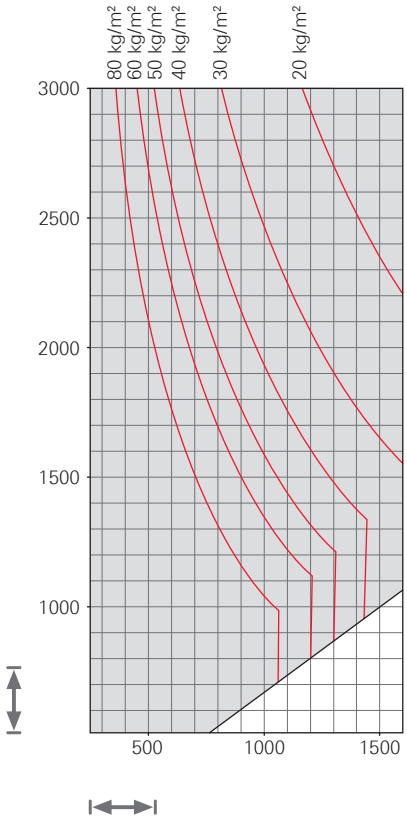

☐ = Impermissible application range

Calculation basis for application diagram: IFT tool

Deductible dimension of glass = 20 mm

(Sash) profile weight = 2 kg/m²

INFO

Lower deductible dimensions of glass or higher profile weights require a separate assessment.

Information on the RC sash widths → *from page 37*

Evidence on the attachment of load-bearing components to the window system by the window manufacturer in accordance with TBDK with the following force:

- on the stay bearing 2200 N
- on the pivot rest 2310 N

The specifications in the application diagram refer to the glass weight in kg/m².

1 mm/m² glass thickness ≙ 2.5 kg

			Application range
	Sash width	**T-O (not couplable)**	
		Rebate sash stay	250 – 1200 mm
		Rebate sash stay + turn restrictor	1200 – 1600 mm
		T-O (couplable)	
		Rebate sash stay, couplable Glass weight max. 70 kg/m²	300 – 900 mm
		Sash stay 500 (tilting disabled)	500 – 1200 mm
		Sash stay 500 (tilting disabled) + turn restrictor	1200 – 1600 mm
	Sash height		520 – 3000 mm
	Sash weight		Max. 80 kg

3.3.3.2 150 kg

With load transfer

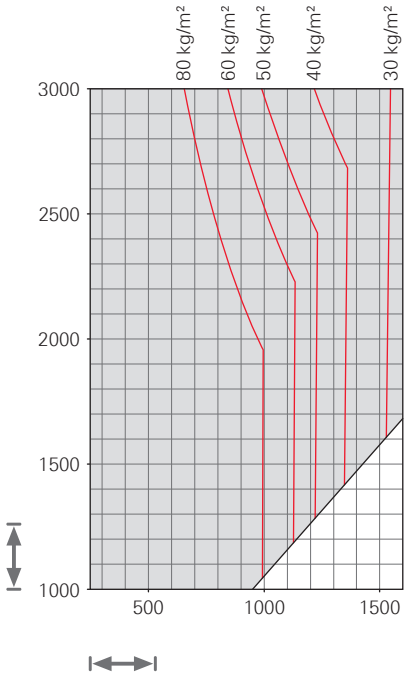

☐ = Impermissible application range

Calculation basis for application diagram: IFT tool

Deductible dimension of glass = 20 mm

(Sash) profile weight = 2 kg/m

INFO

Lower deductible dimensions of glass or higher profile weights require a separate assessment.

Information on the RC sash widths → *from page 37*

Evidence on the attachment of load-bearing components to the window system by the window manufacturer in accordance with TBDK with the following force:

- on the stay bearing 4200 N
- on the pivot rest 4340 N

The specifications in the application diagram refer to the glass weight in kg/m².

1 mm/m² glass thickness ≙ 2.5 kg

			Application range
	Sash width	**T-O (not couplable)**	
		Rebate sash stay	250 – 1200 mm
		Rebate sash stay + turn restrictor	1200 – 1600 mm
		T-O (couplable)	
		Sash stay 500 (tilting disabled)	500 – 1200 mm
		Sash stay 500 (tilting disabled) + turn restrictor	1200 – 1600 mm
	Sash height		1000 – 3000 mm
	Sash weight		Max. 150 kg

3.3.3.3 180 kg

With load transfer and turn restrictor

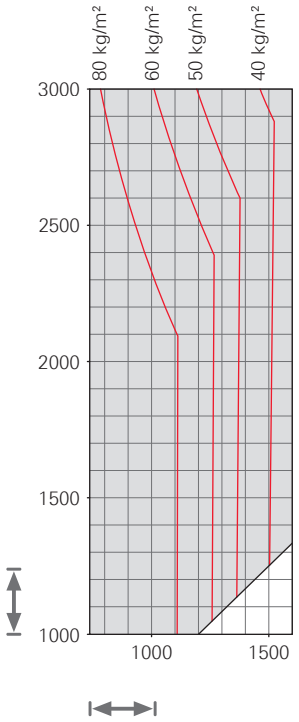

☐ = Impermissible application range

Calculation basis for application diagram: IFT tool

Deductible dimension of glass = 20 mm

(Sash) profile weight = 2 kg/m

INFO

Lower deductible dimensions of glass or higher profile weights require a separate assessment.

Information on the RC sash widths → *from page 37*

Evidence on the attachment of load-bearing components to the window system by the window manufacturer in accordance with TBDK with the following force:

- on the stay bearing 5000 N
- on the pivot rest 5200 N

The specifications in the application diagram refer to the glass weight in kg/m².

1 mm/m² glass thickness ≙ 2.5 kg

			Application range
	Sash width	Sash stay 735 (180 kg) + turn restrictor	735 – 1300 mm
		Sash stay 735 (180 kg) + turn restrictor + additional stay arm	1300 – 1600 mm
	Sash height		1000 – 3000 mm
	Sash weight		Max. 180 kg

3.3.4 Tilt-Only hardware, handle at the top

3.3.4.1 100 kg

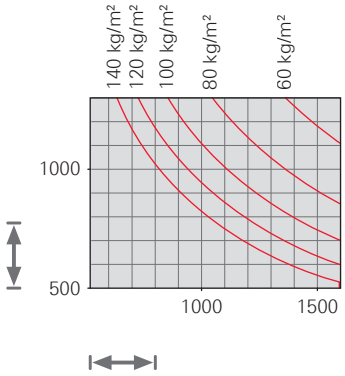

☐ = Impermissible application range

Calculation basis for application diagram: IFT tool

Deductible dimension of glass = 20 mm

(Sash) profile weight = 2 kg/m

INFO

Lower deductible dimensions of glass or higher profile weights require a separate assessment.

Information on the RC sash widths → *from page 37*

The specifications in the application diagram refer to the glass weight in kg/m².

1 mm/m² glass thickness ≙ 2.5 kg

		Application range
	Sash width	520 – 1600 mm
	Sash height	500 – 1300 mm
	Sash weight	Max. 100 kg

3.4 Minimum sash widths and heights

Sash dimensions – standard

	Max. weight	Min. SW				Max. SW	Min. SH	Max. SH	HH
		Without TR	TR with stop	TR size 1	TR size 2				
T&T									
Sash stay 390	80 kg	390	390	–	–	500	555	2400	> 260
Sash stay 500	100 kg	500	500	545	610	735	555	3000	
Sash stay 735	100 kg	735	735	735	735	1600	555	3000	
Sash stay 735	150 kg	735	735	735	735	1600	1000	3000	
Sash stay 735	180 kg	–	735	735	800	1600	1000	3000	
TF									
Sash stay 500	100 kg	500	500	645	715	735	555	3000	> 260
Sash stay 735	100 kg	735	735	735	735	1600	555	3000	
Sash stay 735	150 kg	735	735	735	735	1600	1000	3000	
T-O									
Rebate sash stay	80 kg	250	370	545	610	1600	520	3000	> 260
Rebate sash stay	150 kg	250	370	545	610	1600	1000	3000	
T-O, couplable									
Rebate sash stay, couplable	80 kg	300	370	545	610	900	520	3000	> 260
Sash stay 500 – tilting disabled	80 kg	500	500	545	610	1600	520	3000	
Sash stay 500 – tilting disabled	150 kg	500	500	545	610	1600	1000	3000	
Sash stay 735 – tilting disabled	180 kg	–	735	735	800	1600	1000	3000	
TiSt									
Rebate sash stay	100 kg	520	–	–	–	1600	500	1300	SW / 2

	Max. weight	Min. SW				Max. SW	Min. SH	Max. SH	HH
		Without TR	TR with stop	TR size 1	TR size 2				
TiSs									
Sash stay 500 – turning disabled	100 kg	500	–	–	–	735	555	3000	> 260
Sash stay 735 – turning disabled	100 kg	735	–	–	–	1600	555	3000	
Sash stay 735 – turning disabled	150 kg	735	–	–	–	1600	1000	3000	
Floating-mullion hardware (second opening sash)									
Sash stay 500 – tilting disabled	80 kg	710	710	710	710	1600	675	2700	> 260
Sash stay 500 – tilting disabled	150 kg	710	710	710	710	1600	1000	2700	

Sash dimensions – RC 2

	Max. weight	Min. SW				Max. SW	Min. SH	Max. SH	HH
		Without TR	TR with stop	TR size 1	TR size 2				
T&T									
Sash stay 500	100 kg	625	625	780	850	900	720	3000	SH / 2
Sash stay 735	100 kg	800	800	800	850	1600	720	3000	
Sash stay 735	150 kg	800	800	800	850	1600	1000	3000	
Sash stay 735	180 kg	–	800	945	1015	1600	1000	3000	
T&T | TiltSafe									
Sash stay 500	100 kg	680	–	–	–	900	800	2700	> 390
Sash stay 735	100 kg	800	–	–	–	1300	800	2700	
Sash stay 735	150 kg	800	–	–	–	1300	1000	2700	
TF									
Sash stay 500	100 kg	625	625	795	865	900	720	3000	SH / 2
Sash stay 735	100 kg	800	800	800	865	1600	720	3000	
Sash stay 735	150 kg	800	800	800	865	1600	1000	3000	
T-O									
Rebate sash stay	80 kg	530	620	795	865	1600	720	3000	SH / 2
Rebate sash stay	150 kg	530	620	795	865	1600	1000	3000	
T-O, couplable									
Rebate sash stay, couplable	80 kg	370	600	775	845	900	720	3000	SH / 2
Sash stay 500 – tilting disabled	80 kg	625	625	780	850	1600	720	3000	
Sash stay 500 – tilting disabled	150 kg	625	625	780	850	1600	1000	3000	
Sash stay 735 – tilting disabled	180 kg	–	800	945	1015	1600	1000	3000	
TiSt									
Rebate sash stay	100 kg	520	–	–	–	1600	500	1300	SW / 2
TiSs									
Sash stay 500 – turning disabled	100 kg	625	–	–	–	900	720	3000	SH / 2
Sash stay 735 – turning disabled	100 kg	800	–	–	–	1600	720	3000	
Sash stay 735 – turning disabled	150 kg	800	–	–	–	1600	1000	3000	
Floating-mullion hardware (second opening sash)									
Sash stay 500 – tilting disabled	80 kg	800	800	855	920	1600	720	2700	SH / 2
Sash stay 500 – tilting disabled	150 kg	800	800	855	920	1600	1000	2700	

Sash dimensions – RC 3

	Max. weight	Min. SW				Max. SW	Min. SH	Max. SH	HH
		Without TR	TR with stop	TR size 1	TR size 2				
T&T									
Sash stay 500	100 kg	700	795	–	–	900	870	3000	SH / 2
Sash stay 735	100 kg	875	875	970	1040	1600	870	3000	
Sash stay 735	150 kg	875	875	970	1040	1600	1000	3000	
Sash stay 735	180 kg	–	915	1045	1115	1600	1000	3000	
TF									
Sash stay 500	100 kg	700	810	–	–	900	870	3000	SH / 2
Sash stay 735	100 kg	875	875	985	1055	1600	870	3000	
Sash stay 735	150 kg	875	875	985	1055	1600	1000	3000	
T-O									

	Max. weight	Min. SW				Max. SW	Min. SH	Max. SH	HH
		Without TR	TR with stop	TR size 1	TR size 2				
Rebate sash stay	80 kg	680	810	985	1055	1600	1050	3000	SH / 2
Rebate sash stay	150 kg	680	810	985	1055	1600	1050	3000	
T-O, couplable									
Rebate sash stay, couplable	80 kg	485	800	–	–	900	870	3000	SH / 2
Sash stay 500 – tilting disabled	80 kg	700	795	970	1040	1600	870	3000	
Sash stay 500 – tilting disabled	150 kg	700	795	970	1040	1600	1000	3000	
Sash stay 735 – tilting disabled	180 kg	–	915	1045	1115	1600	1000	3000	
TiSt									
Rebate sash stay	100 kg	670	–	–	–	1600	500	1300	SW / 2
TiSs									
Sash stay 500 – turning disabled	100 kg	700	–	–	–	900	870	3000	SH / 2
Sash stay 735 – turning disabled	100 kg	875	–	–	–	1600	870	3000	
Sash stay 735 – turning disabled	150 kg	875	–	–	–	1600	1000	3000	
Floating-mullion hardware (second opening sash)									
Sash stay 500 – tilting disabled	80 kg	875	875	1045	1110	1600	870	2700	SH / 2
Sash stay 500 – tilting disabled	150 kg	875	875	1045	1110	1600	1000	2700	

– Not permissible / not possible

INFO

Smaller sash widths are possible if the top and bottom security strikers are omitted.

Depending on the profile stability, the test can also be passed with fewer security locking points, and the structure can therefore have a smaller design.

3.5 Profile cross sections

INFO

The following cross sections are neutral, schematic profile cross sections.

The hardware components listed in the table are profile-related and represent a selection from the Roto AL Designo product range for profiles with a 15 / 20 mm sash groove. Further hardware component solutions (e.g. for different groove widths) can be supplied upon request.

Request assistance from Roto with the generally recommended profile assessments from the Roto sales representative in charge of this.

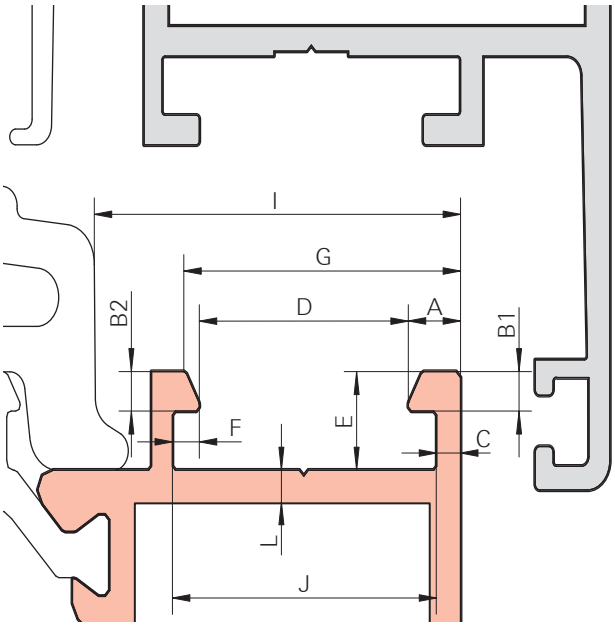

Assignment	Meaning	Min.	Max.
[A]	Flange width, front	3.50	4.30
[B1]	Flange thickness, front	1.50	2.00
[B2]	Flange thickness, rear	1.50	2.00
[C]	Profile leg thickness, front	1.50	2.00
[D]	Groove width	10.00	14.00
[E]	Groove depth	4.50	5.20
[F]	Rear flange overhang	1.70	2.50
[G]	Pivot rest supporting surface	13.20	18.50
[L]	Groove base thickness [1]	1.50	2.00
[I]	Installation space without TiltSafe (frame)	22.00	–
	Installation space with TiltSafe (frame) [2]	26.50	–
[J]	Groove inside width	14.00	18.60

Groove versions

When ordering profile-related frame components, the descriptions V.01 and V.02 imperatively must be noted (see also → *from page 39*).

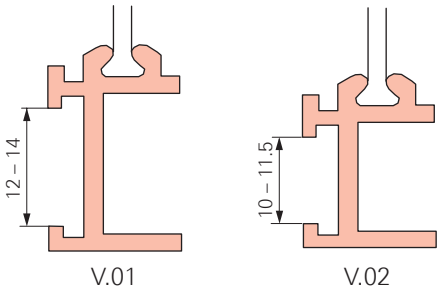

INFO

With groove versions from 11.6 mm to 11.9 mm, a profile assessment must be carried out and the components on the frame side must undergo demo assembly.

[1] Drilling jig for groove base thickness > 2 mm → *from page 161*

[2] With installation space < 26.5 mm, a profile assessment must be carried out.

Clamp strip selection

Clamp strip version no. 1									
	Min.	Max.	DIN	Pivot rest	Sash stay 390	Sash stay 500	Sash stay 735	Rebate sash stay	Rebate sash stay set, couplable
C+J clamp strip dimension	16.00	17.10	L	**624970**	**740851**	**624945**	**624947**	**627256**	**740843**
			R	**624969**	**740852**	**624944**	**624946**	**627255**	**740840**

Clamp strip version no. 3									
	Min.	Max.	DIN	Pivot rest	Sash stay 390	Sash stay 500	Sash stay 735	Rebate sash stay	Rebate sash stay set, couplable
C+J clamp strip dimension	18.20	19.20	L	**624972**	**740853**	**624951**	**624953**	**627258**	**740844**
			R	**624971**	**740854**	**624950**	**624952**	**627257**	**740841**

Clamp strip version no. 4									
	Min.	Max.	DIN	Pivot rest	Sash stay 390	Sash stay 500	Sash stay 735	Rebate sash stay	Rebate sash stay set, couplable
C+J clamp strip dimension	19.30	20.50	L	**624974**	**740855**	**624957**	**624959**	**627260**	**740845**
			R	**624973**	**740856**	**624956**	**624958**	**627259**	**740842**

Descriptions on the sash and frame profile

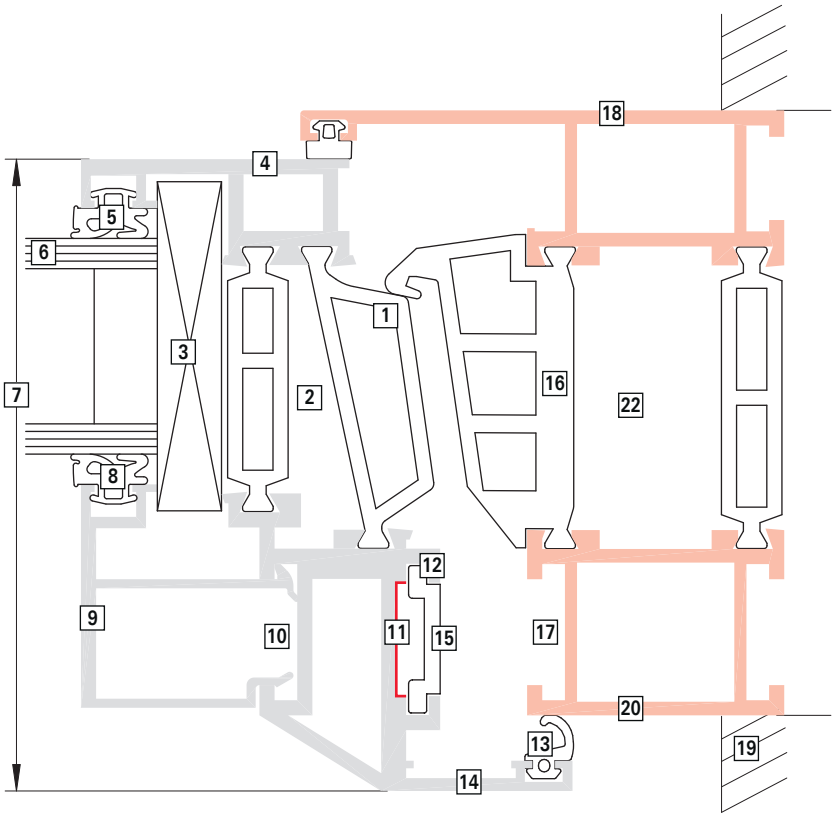

Assignment	Meaning	Assignment	Meaning
[1]	Central gasket stop strut	[12]	Connecting rod groove
[2]	Thermal separation	[13]	Overlap gasket
[3]	Spacer blocking	[14]	Inside shell (sash)
[4]	Outer shell (sash)	[15]	Connecting rod
[5]	Glazing gasket, external	[16]	Central gasket
[6]	Glazing (laminated glass)	[17]	Frame clamping groove for hardware components (frame glazing bead groove)
[7]	Sash profile – depth	[18]	Outer shell (frame)
[8]	Glazing gasket, internal	[19]	Internal reveal

Assignment	Meaning	Assignment	Meaning
[9]	Glazing bead	[20]	Inside shell (frame)
[10]	Sash glazing bead groove	[21]	Frame profile – depth
[11]	Extended connecting rod groove (ECC-groove)	[22]	Thermal separation

Dimensions

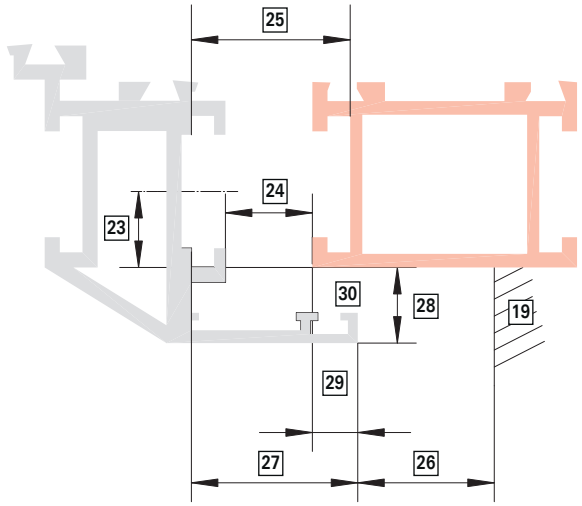

Assignment	Meaning
[23]	Hardware axis
[24]	Rebate clearance
[25]	Chamber dimension (hardware)
[26]	Frame clearance
[27]	Overlap width
[28]	Overlap height (including gasket)
[29]	Overlap coverage
[30]	Hinge passage

3.6 Space requirement for hardware

Please consult us in the event of deviating dimensions.

Single-sashed

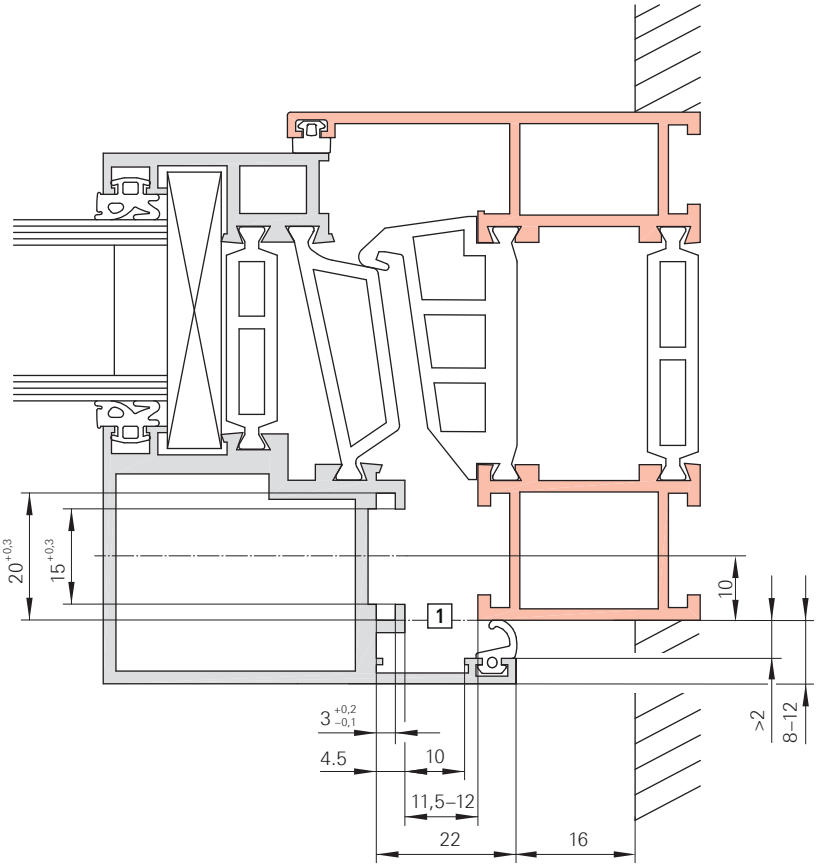

[1] Pay attention to the alignment of the sash and frame.

Double-sashed without fixed mullion – FM espagnolette type

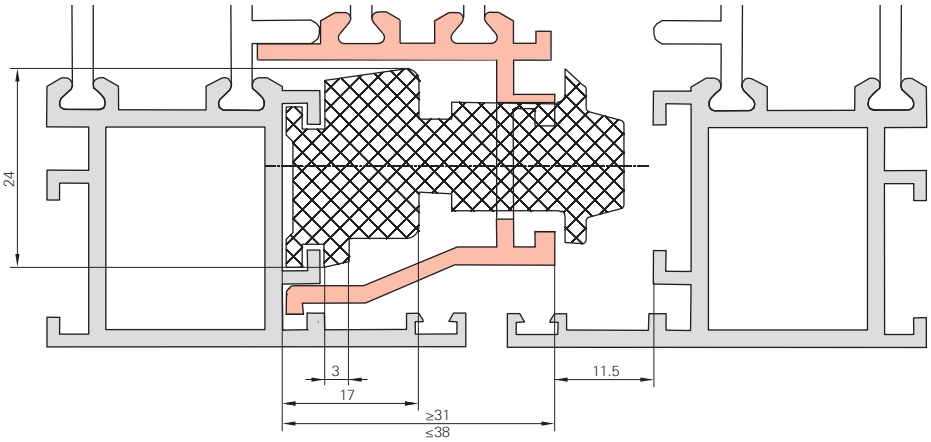

Double-sashed without fixed mullion – FM-Su, FM-SuN, FM-R, FM-Sh espagnolette type

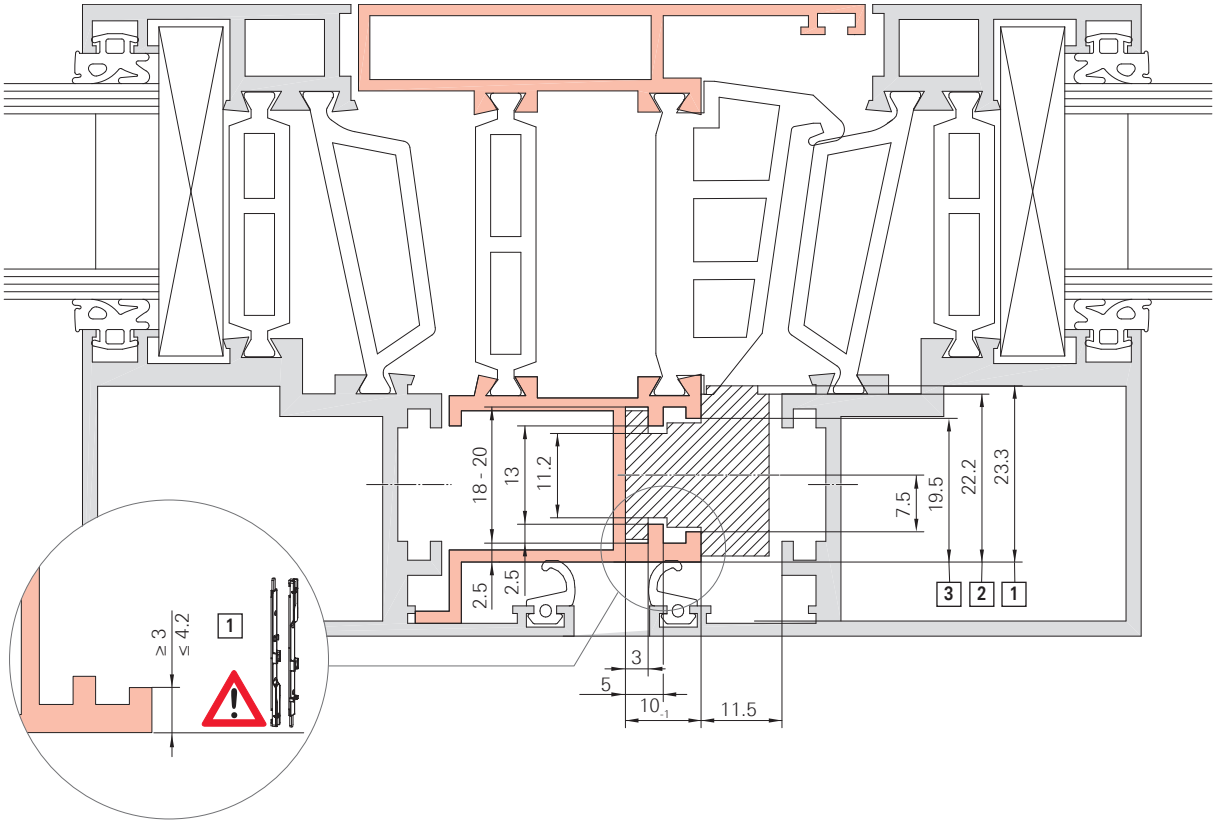

[1] Space requirement for FM-Sh

Note the additional information on the profile leg width (see detail drawing).

[2] Space requirement for FM-Su

[3] Space requirement for FM-R

4 Hardware overviews

The hardware overviews on the following pages are a recommendation on the part of Roto Frank Fenster- und Türtechnologie GmbH.

The basic page layout in the hardware overviews chapter firstly shows examples of the combination of individual hardware components, and the associated parts list can be seen on the following pages.

In the parts list, the parts that have to be ordered have a dark-grey background.

The required order quantity for an element can be found next to the shopping trolley symbol .

The packaging unit is in front of the material number. The minimum packaging quantity is ten units. Larger packaging units (e.g. 50 units) can be found under individual parts and accessories.

The item numbers in the squares link the hardware overview to the parts list.

Shown: DIN right version; size- and weight-dependent components are greyed out.

When installing a turn restrictor, note the changed minimum sash widths .

The actual composition of the hardware depends on:

- the height of the element
- the width of the element
- the weight of the element
- Security class

INFO

Security classes

- The RC 2 and RC 3 security classes refer to the entire system.
- The hardware complies with the corresponding security classes in the required system tests.
- However, the security classes are only complied with if all of the other components in the system (e.g. profile system, reinforcement, glass, etc.) are also designed for this.

Recommended handles can be found in the handles catalogue.

Determine the quantity of required hardware components with Roto Con Orders.

INFO

Roto Con Orders

Efficient online hardware configurator for the custom configuration of individual window and door hardware components. All conventional shapes and opening types can be automatically configured quickly and easily. Individual parts lists, including application ranges and an exemplary hardware overview, can be ordered from your responsible sales representative.

www.roto-frank.com

4.1 Tilt&Turn hardware

4.1.1 T&T | 80 kg

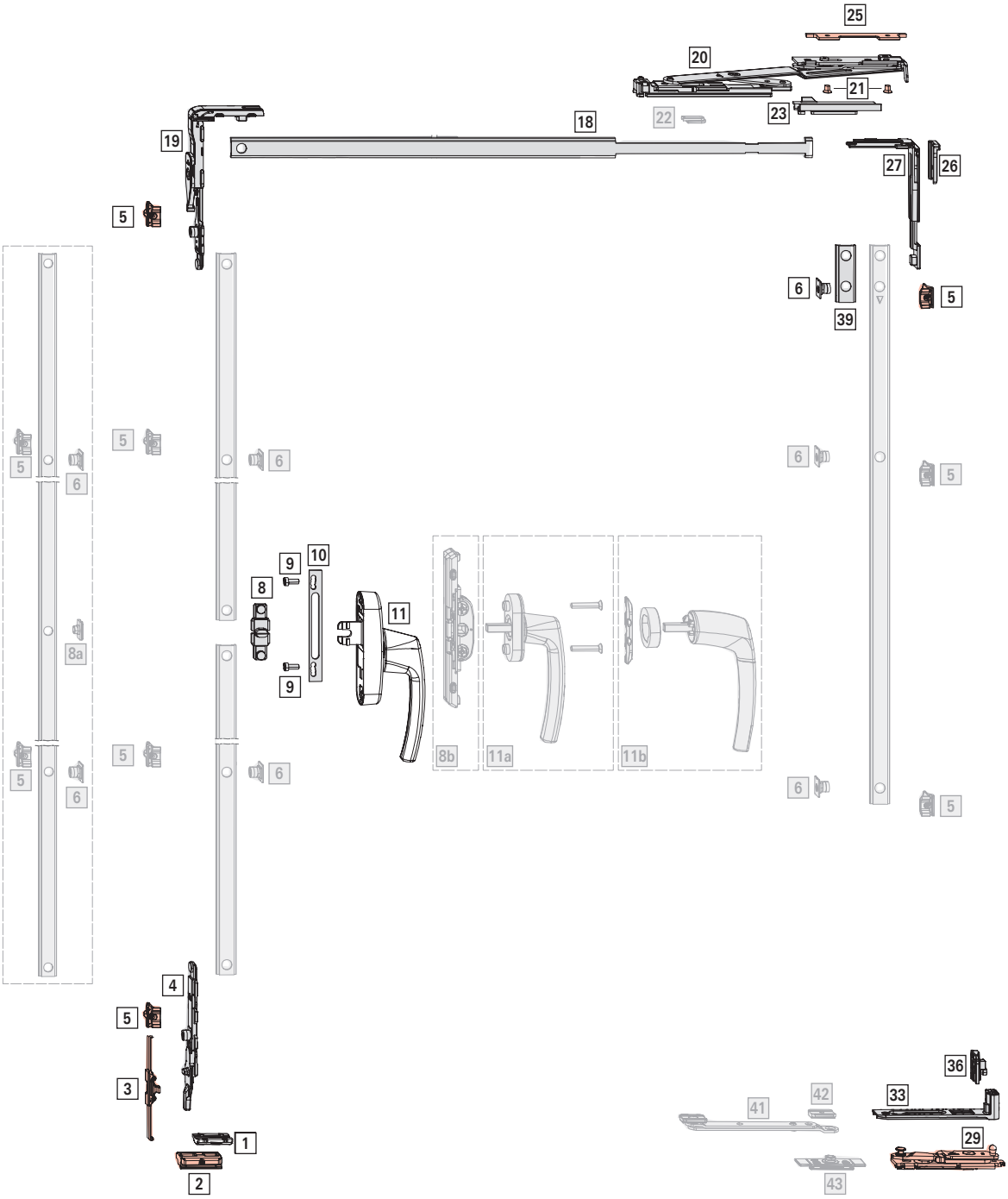

Application range

SW: 390 - 500 mm

SH: 555 - 2400 mm

S.kg: max. 80 kg

INFO
Only use bearings / clamp strips which have been approved for the profile. Information can be obtained from Roto sales representatives.

Basic set

[29] Pivot rest with clamp strip 1

			№
No. 1	Left	10 Piece(s)	624970
	Right	10 Piece(s)	624969
No. 3	Left	10 Piece(s)	624972
	Right	10 Piece(s)	624971
No. 4	Left	10 Piece(s)	624974
	Right	10 Piece(s)	624973

[*] Corner hinge set 1

		№
Left	10 Piece(s)	739700
Right	10 Piece(s)	739699

Contents:

[*]		#
[33]	Corner hinge	1
[36]	Adjustment piece	1

[*] T&T locking components set 1
Large packages → *from page 166*

		№
V.01	10 Piece(s)	728804
V.02	10 Piece(s)	728805

Contents:

[*]		#
[1]	Run-up block	1
[2]	Tilt striker	1
[3]	Anti-lifting device V.01 / V.02	1
[4]	Tilt lock bolt	1
[5]	Striker V.01 / V.02	2
[19]	Corner drive with blocking device and retaining fork	1

[*] Sash stay 390 1

				№
No. 1	150	Left	10 Piece(s)	740851
	150	Right	10 Piece(s)	740852
No. 3	150	Left	10 Piece(s)	740853
	150	Right	10 Piece(s)	740854
No. 4	150	Left	10 Piece(s)	740855
	150	Right	10 Piece(s)	740856

Contents:

[*]		#
[18]	Coupling rod	1
[20]	Sash stay 390	1
[21]	Countersunk screw M5 x 7	2
[23]	Scissor stay inclusion	1
[25]	Clamp strip no. 1 / no. 3 / no. 4	1

[*] CL corner drive set
Large packages

		№
V.01	20 Piece(s)	728842
V.02	20 Piece(s)	728843

Contents:

[*]		#
[5]	Striker V.01 / V.02	2
[6]	Cam, insertable	2
[26]	Retaining fork	1
[27]	CL corner drive	1

[39] Connecting rod, fixed, vertical (CR4) 1
→ *from page 175*

Espagnolette and connector

[*] T connector set 1
Alternatively:
[8a] Connector bolt, insertable 1 → *from page 172*
[8b] Flush-encased gearbox 1 → *from page 173*

		№
AL T connector set	10 Piece(s)	728981

Contents:

[*]		
[8]	T connector	1
[9]	Cylinder screw M5 x 12	2

[10] Espagnolette support 1

				№
Espagnolette support	For Roto Line AL geared-handle	13.5	100 Piece(s)	331937

[11] Roto Line window handle – geared-handle 1
→ CTL_1
Alternatively:

[a]	Roto Line window handle – standard	1	→ CTL_1
	Countersunk screw M5 x 30	2	
[b]	Roto Line window handle – handle without escutcheon	1	→ CTL_1
	Ring for handle without escutcheon	1	
	Mounting plate	1	

Height-dependent components

[5] Striker

			Nº
V.01	9	100 Piece(s)	728918
V.02	9	100 Piece(s)	728920

≤ 1300	–
1301 – 1800	1
> 1801	3

[6] Cam, insertable

		Nº
Insertable	100 Piece(s)	334671

≤ 1300	–
1301 – 1800	1
> 1801	3

[22] Tilt distance restrictor; SH ≤ 800 mm / reduce tilt distance — 1

		Nº
For sash stay 390	10 Piece(s)	639346

INFO
Using the tilt distance restrictor limits the tilt distance of the sash stay to 100 mm.

Optional

[*] Turn restrictor set, with stop — 1

Alternatively:

Turn restrictor set, braked, damped — 1 → *from page 182*

			Nº
Clampable	V.01	10 pieces	740814
	V.02	10 pieces	740835

Contents:

[*]		
[41]	Rotating arm, compl.	1
[42]	Stop	1
[43]	Bearing, compl.	1

4.1.2 T&T | 150 kg

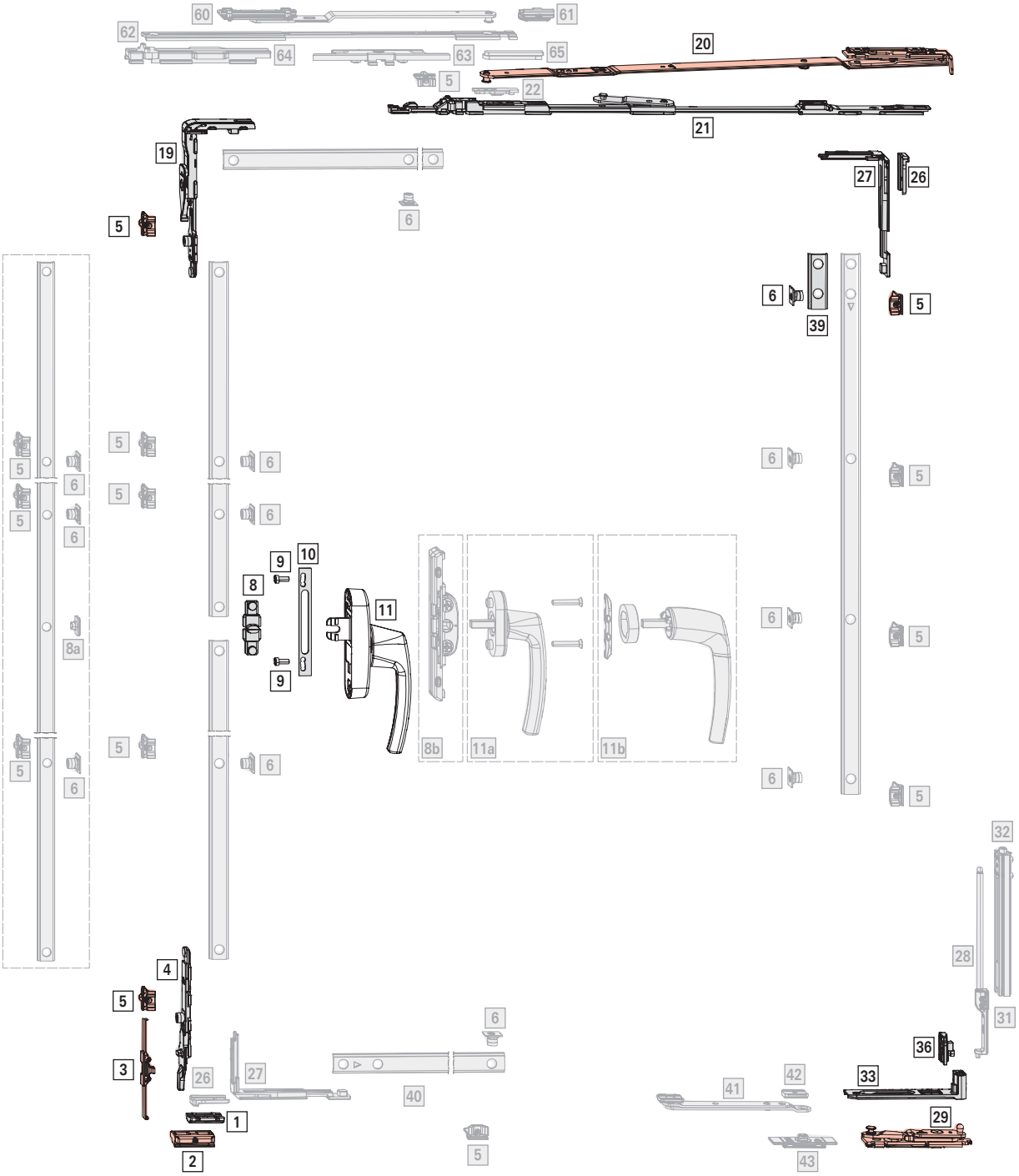
60
61
62
64
63
65
20
5
22
21
19
27
26
6
5
6
39
5
5
6
5
6
5
6
6
5
6
5
9
10
8
11
8a
9
6
5
8b
11a
11b
6
5
5
6
6
5
32
28
4
5
6
31
36
3
26
27
40
42
33
41
1
29
2
5
43

Application range

SW: 500 - 1600 mm

SH: 555 - 3000 mm

S.kg: max. 150 kg

INFO

Only use bearings / clamp strips which have been approved for the profile. Information can be obtained from Roto sales representatives.

Basic set

[29] Pivot rest with clamp strip — 1

			Nº
No. 1	Left	10 Piece(s)	624970
	Right	10 Piece(s)	624969
No. 3	Left	10 Piece(s)	624972
	Right	10 Piece(s)	624971
No. 4	Left	10 Piece(s)	624974
	Right	10 Piece(s)	624973

[*] Corner hinge set — 1

		Nº
Left	10 Piece(s)	739700
Right	10 Piece(s)	739699

Contents:

[*]		#
[33]	Corner hinge	1
[36]	Adjustment piece	1

[*] T&T locking components set — 1

Large packages → *from page 166*

		Nº
V.01	10 Piece(s)	728804
V.02	10 Piece(s)	728805

Contents:

[*]		#
[1]	Run-up block	1
[2]	Tilt striker	1
[3]	Anti-lifting device V.01 / V.02	1
[4]	Tilt lock bolt	1
[5]	Striker V.01 / V.02	2
[19]	Corner drive with blocking device and retaining fork	1

[21] Scissor stay guide — 1

		Nº
500	10 Piece(s)	740836
735	10 Piece(s)	740838

≤ 735	500
> 735	735

[20] Sash stay — 1

					Nº
500	No. 1	130	Left	10 Piece(s)	624945
		130	Right	10 Piece(s)	624944
	No. 3	130	Left	10 Piece(s)	624951
		130	Right	10 Piece(s)	624950
	No. 4	130	Left	10 Piece(s)	624957
		130	Right	10 Piece(s)	624956
735	No. 1	150	Left	10 Piece(s)	624947
		150	Right	10 Piece(s)	624946
	No. 3	150	Left	10 Piece(s)	624953
		150	Right	10 Piece(s)	624952
	No. 4	150	Left	10 Piece(s)	624959
		150	Right	10 Piece(s)	624958

≤ 735	500
> 735	735

[*] CL corner drive set — 1

Large packages

		Nº
V.01	20 Piece(s)	728842
V.02	20 Piece(s)	728843

Contents:

[*]		#
[5]	Striker V.01 / V.02	2
[6]	Cam, insertable	2
[26]	Retaining fork	1
[27]	CL corner drive	1

[39] Connecting rod, fixed, vertical (CR4) — 1

→ *from page 175*

Espagnolette and connector

[*] T connector set — 1

Alternatively:

[8a]	Connector bolt, insertable	1	→ *from page 172*
[8b]	Flush-encased gearbox	1	→ *from page 173*

		Nº
AL T connector set	10 Piece(s)	728981

Contents:

[*]		
[8]	T connector	1
[9]	Cylinder screw M5 x 12	2

[10] Espagnolette support 1

				Nº
Espagnolette support	For Roto Line AL geared-handle	13.5	100 Piece(s)	331937

[11] Roto Line window handle – geared-handle 1 → CTL_1

Alternatively:

[a]	Roto Line window handle – standard	1	→ CTL_1
	Countersunk screw M5 x 30	2	
[b]	Roto Line window handle – handle without escutcheon	1	→ CTL_1
	Ring for handle without escutcheon	1	
	Mounting plate	1	

Height-dependent components

[5] Striker

			Nº
V.01	9	100 Piece(s)	728918
V.02	9	100 Piece(s)	728920

≤ 1300	–
1301 – 1800	1
1801 – 2400	3
> 2400	5

[6] Cam, insertable

		Nº
Insertable	100 Piece(s)	334671

≤ 1300	–
1301 – 1800	1
1801 – 2400	3
> 2400	5

[22] Tilt distance restrictor; SH ≤ 800 mm / reduce tilt distance 1

		Nº
For sash stay 500 / 735	10 Piece(s)	502834

INFO
Using the tilt distance restrictor limits the tilt distance of the sash stay to 100 mm.

Width-dependent components

[*] T&T additional stay arm set | 150 kg[3]

			Nº
V.01	160	10 Piece(s)	728806
V.02	160	10 Piece(s)	728807

Contents:

[*]		#
[60]	Additional scissor stay arm, compl. V.01 / V.02	1
[61]	Retaining spring, compl.	1
[62]	Coupling rod	1
[63]	Scissor stay deadbolt	1
[64]	Scissor stay guide, compl. T&T	1
[65]	T&T stop	1

≤ 1300	–
> 1300	1

[*] CL corner drive set
Large packages

		Nº
V.01	20 Piece(s)	728842
V.02	20 Piece(s)	728843

Contents:

[*]		#
[5]	Striker V.01 / V.02	2
[6]	Cam, insertable	2
[26]	Retaining fork	1
[27]	CL corner drive	1

≤ 1300	–
> 1300	1

[*] Turn restrictor set, with stop 1

Alternatively:

Turn restrictor set, braked, damped 1 → *from page 182*

			Nº
Clampable	V.01	10 pieces	740814
	V.02	10 pieces	740835

Contents:

[*]		
[41]	Rotating arm, compl.	1

[3] Installation of the mishandling device on the corner drive / flush-encased gearbox is prescribed in accordance with DIN 18360 (German construction contract procedures (VOB)).

[*]		
[42]	Stop	1
[43]	Bearing, compl.	1

≤ 1200	–
> 1200	1

[40] Connecting rod, fixed, horizontal, bottom (CR5)

→ *from page 175*

Weight-dependent components

[*] Load transfer set; S.kg > 100 kg — 1

			№
V.01	Left	10 Piece(s)	739694
	Right	10 Piece(s)	739693
V.02	Left	10 Piece(s)	739696
	Right	10 Piece(s)	739695

Contents:

[*]		#
[28]	Support rod	1
[31]	Frame bearing V.01 / V.02	1
[32]	Sash component	1

4.1.3 T&T | RC 2 | 150 kg

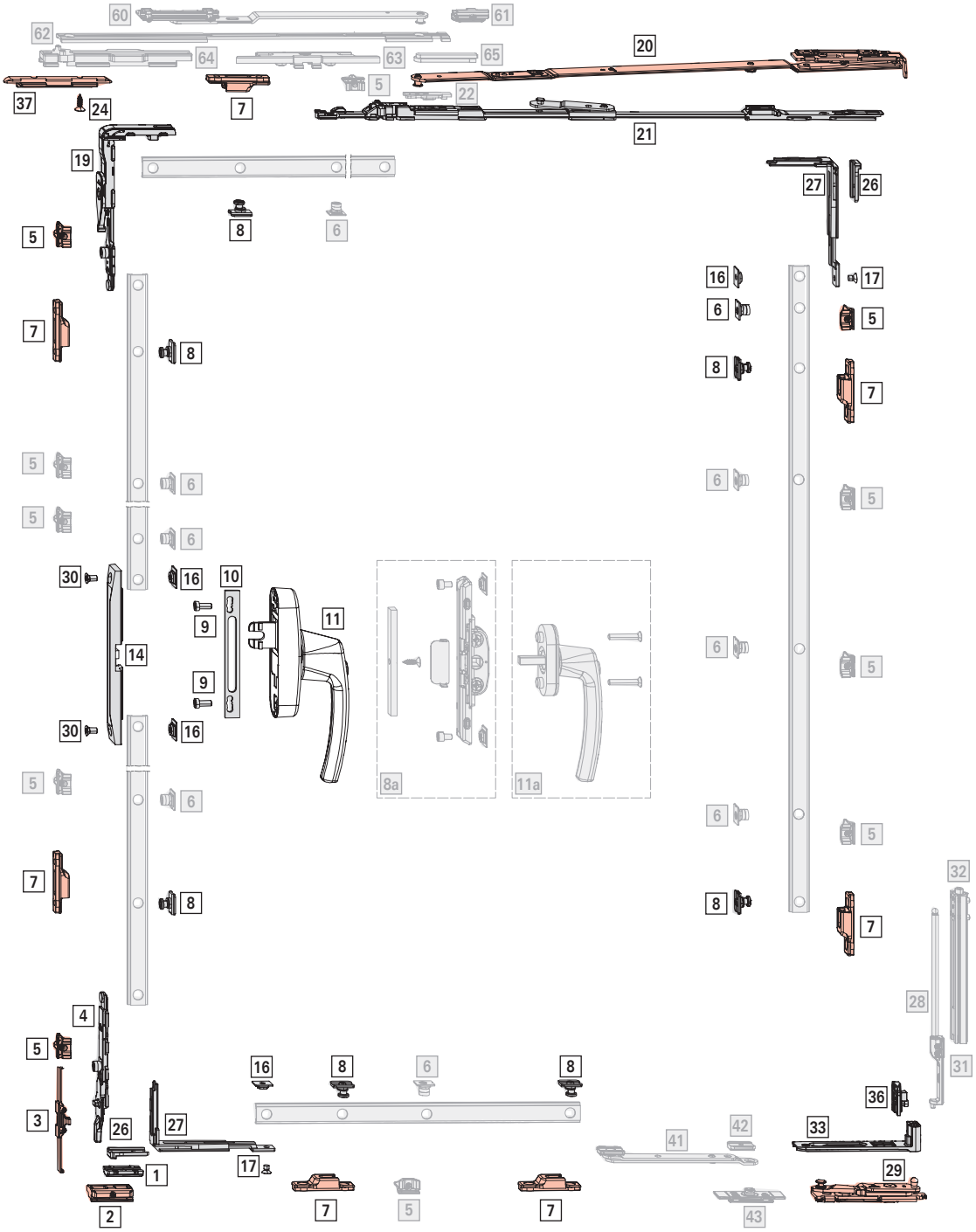

Application range

SW: 625 - 1600 mm

SH: 720 - 3000 mm

S.kg: max. 150 kg

INFO
Only use bearings / clamp strips which have been approved for the profile. Information can be obtained from Roto sales representatives.

Basic set

[29] Pivot rest with clamp strip — 1

			Nº
No. 1	Left	10 Piece(s)	624970
	Right	10 Piece(s)	624969
No. 3	Left	10 Piece(s)	624972
	Right	10 Piece(s)	624971
No. 4	Left	10 Piece(s)	624974
	Right	10 Piece(s)	624973

[*] Corner hinge set — 1

		Nº
Left	10 Piece(s)	739700
Right	10 Piece(s)	739699

Contents:

[*]		#
[33]	Corner hinge	1
[36]	Adjustment piece	1

[*] T&T locking components set — 1

Large packages → *from page 166*

		Nº
V.01	10 Piece(s)	728804
V.02	10 Piece(s)	728805

Contents:

[*]		#
[1]	Run-up block	1
[2]	Tilt striker	1
[3]	Anti-lifting device V.01 / V.02	1
[4]	Tilt lock bolt	1
[5]	Striker V.01 / V.02	2
[19]	Corner drive with blocking device and retaining fork	1

[21] Scissor stay guide — 1

		Nº
500	10 Piece(s)	740836
735	10 Piece(s)	740838

≤ 900	500
≥ 800	735

[20] Sash stay — 1

					Nº
500	No. 1	130	Left	10 Piece(s)	624945
		130	Right	10 Piece(s)	624944
	No. 3	130	Left	10 Piece(s)	624951
		130	Right	10 Piece(s)	624950
	No. 4	130	Left	10 Piece(s)	624957
		130	Right	10 Piece(s)	624956
735	No. 1	150	Left	10 Piece(s)	624947
		150	Right	10 Piece(s)	624946
	No. 3	150	Left	10 Piece(s)	624953
		150	Right	10 Piece(s)	624952
	No. 4	150	Left	10 Piece(s)	624959
		150	Right	10 Piece(s)	624958

≤ 900	500
≥ 800	735

[*] CL SEC corner drive set — 2

Large packages

		Nº
SEC corner drive CL set with retaining fork	10 Piece(s)	728944

[*]		#
[16]	SEC connector	1
[17]	Countersunk screw M5 x 7	1
[26]	SEC retaining fork	1
[27]	CL SEC corner drive	1

[*] SEC rebate-clearance reduction set — 1

Large packages → *from page 176*

			Nº
SEC rebate-clearance reduction set	For corner drives	10 Piece(s)	728950

[*]		#
[24]	Countersunk screw ST4.8 x 16	1
[37]	SEC rebate-clearance reduction CD	1

[7] SEC striker — 7

			Nº
V.01	9	100 Piece(s)	212637
V.02	9	100 Piece(s)	212638

[8] SEC cam RC 2 7

Insertable	100 Piece(s)	447245

[5] Striker 1

V.01	9	100 Piece(s)	728918
V.02	9	100 Piece(s)	728920

[6] Cam, insertable 1

Insertable	100 Piece(s)	334671

Espagnolette and connector

[*] SEC espagnolette protection set 1

Large packages

Alternatively:

[8a] SEC flush-encased gearbox set 1 → *from page 180*

SEC espagnolette protection set	10 Piece(s)	728952

Contents:

[*]		#
[14]	SEC espagnolette protection	1
[16]	SEC connector	2
[30]	Countersunk screw M5 x 10	2

[9] Cylinder screw M5 x 12 2

Cylinder screw	M5x12	100 Piece(s)	728925

[10] Espagnolette support 1

Espagnolette support	For Roto Line AL geared-handle	13.5	100 Piece(s)	331937

[11] Roto Line window handle – geared-handle, lockable 1 → CTL_1

Alternatively:

[a] Roto Line window handle, lockable 1 → CTL_1

Countersunk screw M5 x 30 2

Height-dependent components

[5] Striker

V.01	9	100 Piece(s)	728918
V.02	9	100 Piece(s)	728920

≤ 1300	–
1301 – 1800	2
1801 – 2400	4
> 2400	6

[6] Cam, insertable

Insertable	100 Piece(s)	334671

≤ 1300	–
1301 – 1800	2
1801 – 2400	4
> 2400	6

[22] Tilt distance restrictor; SH ≤ 800 mm / reduce tilt distance 1

For sash stay 500 / 735	10 Piece(s)	502834

INFO
Using the tilt distance restrictor limits the tilt distance of the sash stay to 100 mm.

Width-dependent components

[*] T&T additional stay arm set | 150 kg[4]

V.01	160	10 Piece(s)	728806
V.02	160	10 Piece(s)	728807

Contents:

[*]		#
[60]	Additional scissor stay arm, compl. V.01 / V.02	1
[61]	Retaining spring, compl.	1
[62]	Coupling rod	1
[63]	Scissor stay deadbolt	1
[64]	Scissor stay guide, compl. T&T	1
[65]	T&T stop	1

≤ 1300	–
> 1300	1

[5] Striker

V.01	9	100 Piece(s)	728918

[4] Installation of the mishandling device on the corner drive / flush-encased gearbox is prescribed in accordance with DIN 18360 (German construction contract procedures (VOB)).

V.02	9	100 Piece(s)	728920

≤ 1300	–
> 1300	2

[6] Cam, insertable

Insertable	100 Piece(s)	334671

≤ 1300	–
> 1300	2

[*] Turn restrictor set, with stop 1

Alternatively:

Turn restrictor set, braked, damped 1 → *from page 182*

Clampable	V.01	10 pieces	740814
	V.02	10 pieces	740835

Contents:

[*]		
[41]	Rotating arm, compl.	1
[42]	Stop	1
[43]	Bearing, compl.	1

≤ 1200	–
> 1200	1

Weight-dependent components

[*] Load transfer set; S.kg > 100 kg 1

V.01	Left	10 Piece(s)	739694
	Right	10 Piece(s)	739693
V.02	Left	10 Piece(s)	739696
	Right	10 Piece(s)	739695

Contents:

[*]		#
[28]	Support rod	1
[31]	Frame bearing V.01 / V.02	1
[32]	Sash component	1

4.1.4 T&T | RC 3 | 150 kg

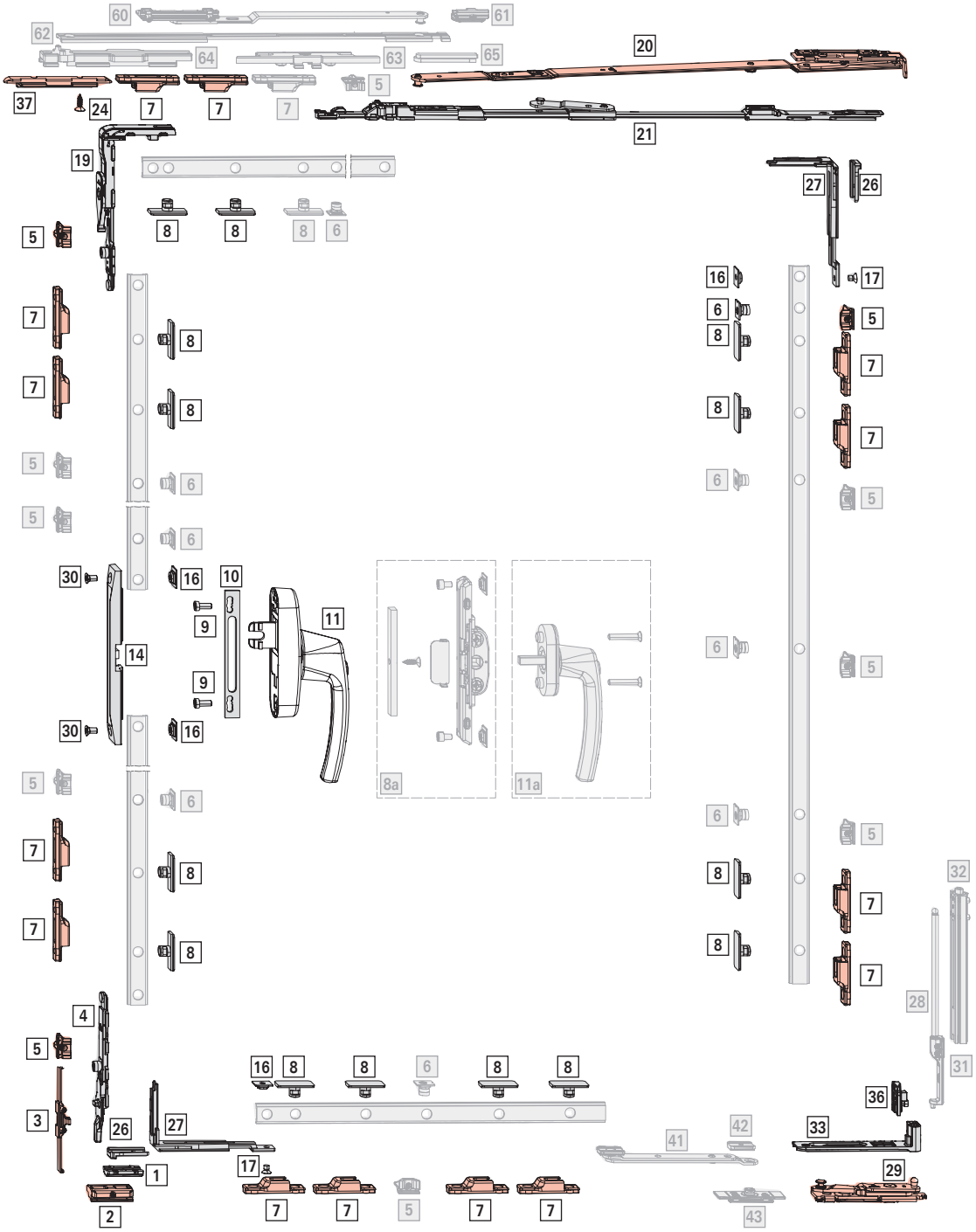

Application range

SW: 700 - 1600 mm

SH: 870 - 3000 mm

S.kg: max. 150 kg

INFO
Only use bearings / clamp strips which have been approved for the profile. Information can be obtained from Roto sales representatives.

Basic set

[29] Pivot rest with clamp strip — 1

			Nº
No. 1	Left	10 Piece(s)	624970
	Right	10 Piece(s)	624969
No. 3	Left	10 Piece(s)	624972
	Right	10 Piece(s)	624971
No. 4	Left	10 Piece(s)	624974
	Right	10 Piece(s)	624973

[*] Corner hinge set — 1

		Nº
Left	10 Piece(s)	739700
Right	10 Piece(s)	739699

Contents:

[*]		#
[33]	Corner hinge	1
[36]	Adjustment piece	1

[*] T&T locking components set — 1

Large packages → *from page 166*

		Nº
V.01	10 Piece(s)	728804
V.02	10 Piece(s)	728805

Contents:

[*]		#
[1]	Run-up block	1
[2]	Tilt striker	1
[3]	Anti-lifting device V.01 / V.02	1
[4]	Tilt lock bolt	1
[5]	Striker V.01 / V.02	2
[19]	Corner drive with blocking device and retaining fork	1

[21] Scissor stay guide — 1

		Nº
500	10 Piece(s)	740836
735	10 Piece(s)	740838

≤ 900	500
≥ 875	735

[20] Sash stay — 1

					Nº
500	No. 1	130	Left	10 Piece(s)	624945
		130	Right	10 Piece(s)	624944
	No. 3	130	Left	10 Piece(s)	624951
		130	Right	10 Piece(s)	624950
	No. 4	130	Left	10 Piece(s)	624957
		130	Right	10 Piece(s)	624956
735	No. 1	150	Left	10 Piece(s)	624947
		150	Right	10 Piece(s)	624946
	No. 3	150	Left	10 Piece(s)	624953
		150	Right	10 Piece(s)	624952
	No. 4	150	Left	10 Piece(s)	624959
		150	Right	10 Piece(s)	624958

≤ 900	500
≥ 875	735

[*] CL SEC corner drive set — 2

Large packages

		Nº
SEC corner drive CL set with retaining fork	10 Piece(s)	728944

[*]		#
[16]	SEC connector	1
[17]	Countersunk screw M5 x 7	1
[26]	SEC retaining fork	1
[27]	CL SEC corner drive	1

[*] SEC rebate-clearance reduction set — 1

Large packages → *from page 176*

			Nº
SEC rebate-clearance reduction set	For corner drives	10 Piece(s)	728950

[*]		#
[24]	Countersunk screw ST4.8 x 16	1
[37]	SEC rebate-clearance reduction CD	1

[7] SEC striker — 14

			Nº
V.01	9	100 Piece(s)	212637
V.02	9	100 Piece(s)	212638

[8]	SEC cam	RC 3	14
			№
Insertable		100 Piece(s)	443530

[5]	Striker		1
			№
V.01	9	100 Piece(s)	728918
V.02	9	100 Piece(s)	728920

[6]	Cam, insertable	1
		№
Insertable	100 Piece(s)	334671

Espagnolette and connector

[*]	SEC espagnolette protection set		1
	Large packages		
	Alternatively:		
[8a]	SEC flush-encased gearbox set	1	→ *from page 180*
			№
SEC espagnolette protection set		10 Piece(s)	728952

Contents:

[*]		#
[14]	SEC espagnolette protection	1
[16]	SEC connector	2
[30]	Countersunk screw M5 x 10	2

[9]	Cylinder screw M5 x 12		2
			№
Cylinder screw	M5x12	100 Piece(s)	728925

[10]	Espagnolette support				1
					№
Espagnolette support	For Roto Line AL geared-handle	13.5	100 Piece(s)		331937

[11]	**Roto Line window handle – geared-handle**, lockable	1 → CTL_1
	Alternatively:	
[a]	Roto Line window handle, lockable	1 → CTL_1
	Countersunk screw M5 x 30	2

Height-dependent components

[5]	Striker		
			№
V.01	9	100 Piece(s)	728918
V.02	9	100 Piece(s)	728920

≤ 1300	–
1301 – 1800	2
1801 – 2400	4
> 2400	6

[6]	Cam, insertable	
		№
Insertable	100 Piece(s)	334671

≤ 1300	–
1301 – 1800	2
1801 – 2400	4
> 2400	6

Width-dependent components

[*]	T&T additional stay arm set | 150 kg[5]		
			№
V.01	160	10 Piece(s)	728806
V.02	160	10 Piece(s)	728807

Contents:

[*]		#
[60]	Additional scissor stay arm, compl. V.01 / V.02	1
[61]	Retaining spring, compl.	1
[62]	Coupling rod	1
[63]	Scissor stay deadbolt	1
[64]	Scissor stay guide, compl. T&T	1
[65]	T&T stop	1

≤ 1300	–
> 1300	1

[5]	Striker		
			№
V.01	9	100 Piece(s)	728918
V.02	9	100 Piece(s)	728920

≤ 1300	–
> 1300	2

[5] Installation of the mishandling device on the corner drive / flush-encased gearbox is prescribed in accordance with DIN 18360 (German construction contract procedures (VOB)).

[6]	Cam, insertable	
		№
Insertable	100 Piece(s)	334671

≤ 1300	–
> 1300	2

[7]	SEC striker		
			№
V.01	9	100 Piece(s)	212637
V.02	9	100 Piece(s)	212638

≤ 1100	–
> 1100	1

[8]	SEC cam	RC 3
		№
Insertable	100 Piece(s)	443530

≤ 1100	–
> 1100	1

[*]	Turn restrictor set, with stop			1
	Alternatively:			
	Turn restrictor set, braked, damped	1		→ *from page 182*
				№
Clampable	V.01	10 pieces		740814
	V.02	10 pieces		740835

Contents:

[*]		
[41]	Rotating arm, compl.	1
[42]	Stop	1
[43]	Bearing, compl.	1

≤ 1200	–
> 1200	1

Weight-dependent components

[*]	**Load transfer set**; S.kg > 100 kg		1
			№
V.01	Left	10 Piece(s)	739694
	Right	10 Piece(s)	739693
V.02	Left	10 Piece(s)	739696
	Right	10 Piece(s)	739695

Contents:

[*]		#
[28]	Support rod	1
[31]	Frame bearing V.01 / V.02	1
[32]	Sash component	1

4.1.5 T&T | TiltSafe | RC 2 | 150 kg

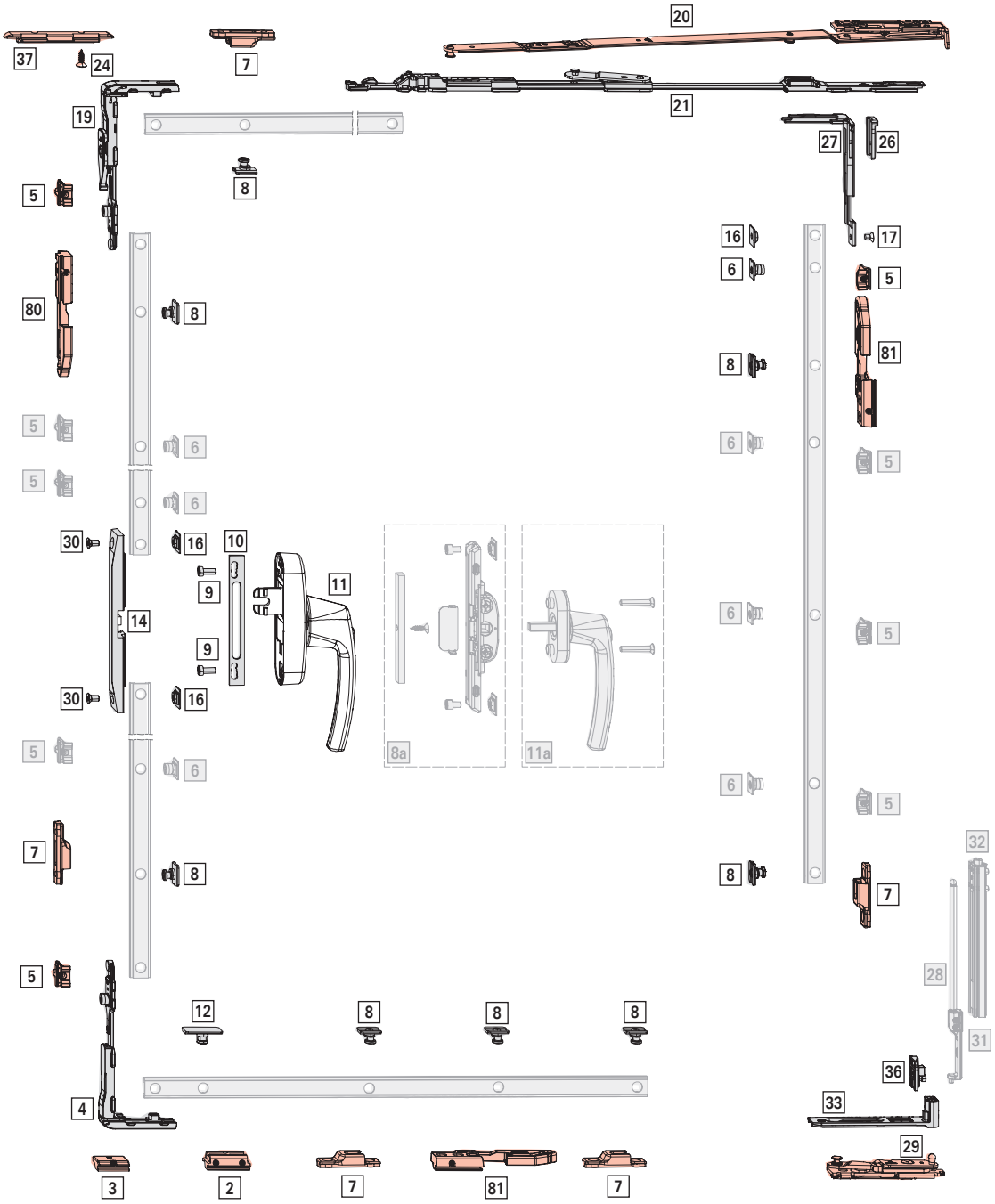

Application range

SW: 680 - 1300 mm

SH: 800 - 2700 mm

S.kg: max. 150 kg

INFO
Only use bearings / clamp strips which have been approved for the profile.

Request assistance from Roto with the generally recommended profile assessments from the Roto sales representative in charge of this.

Basic set

[29] Pivot rest with clamp strip — 1

			Nº
No. 1	Left	10 Piece(s)	624970
	Right	10 Piece(s)	624969
No. 3	Left	10 Piece(s)	624972
	Right	10 Piece(s)	624971
No. 4	Left	10 Piece(s)	624974
	Right	10 Piece(s)	624973

[*] Corner hinge set — 1

		Nº
Left	10 Piece(s)	739700
Right	10 Piece(s)	739699

Contents:

[*]		#
[33]	Corner hinge	1
[36]	Adjustment piece	1

[*] TiltSafe locking components set — 1

		Nº
V.01	10 Piece(s)	891318
V.02	10 Piece(s)	891365

Contents:

[*]		#
[2]	TiltSafe tilt striker	1
[3]	Run-up wedge V.01 / V.02	1
[4]	Corner drive without blocking device, with retaining fork	1
[5]	Striker V.01 / V.02	2
[12]	SEC cam RC 3, insertable	1
[19]	Corner drive with blocking device and retaining fork	1

[21] Scissor stay guide — 1

		Nº
500	10 Piece(s)	740836
735	10 Piece(s)	740838

≤ 900	500
≥ 800	735

[20] Sash stay — 1

					Nº
500	No. 1	130	Left	10 Piece(s)	624945
		130	Right	10 Piece(s)	624944
	No. 3	130	Left	10 Piece(s)	624951
		130	Right	10 Piece(s)	624950
	No. 4	130	Left	10 Piece(s)	624957
		130	Right	10 Piece(s)	624956
735	No. 1	150	Left	10 Piece(s)	624947
		150	Right	10 Piece(s)	624946
	No. 3	150	Left	10 Piece(s)	624953
		150	Right	10 Piece(s)	624952
	No. 4	150	Left	10 Piece(s)	624959
		150	Right	10 Piece(s)	624958

≤ 900	500
≥ 800	735

[*] TiltSafe set — 1

		Nº
Left	10 Piece(s)	891051
Right	10 Piece(s)	891050

Contents:

[*]		#
[80]	SEC striker for tilt ventilation, compl. with lock-in position	1
[81]	SEC striker for tilt ventilation, compl. without lock-in position	2

INFO
Tamper-proof screws are not included in the scope of delivery.

[*] CL SEC corner drive set — 1
Large packages

		Nº
SEC corner drive CL set with retaining fork	10 Piece(s)	728944

[*]		#
[16]	SEC connector	1
[17]	Countersunk screw M5 x 7	1
[26]	SEC retaining fork	1

[*]		#
[27]	CL SEC corner drive	1

[*] SEC rebate-clearance reduction set 1
Large packages → *from page 176*

			Nº
SEC rebate-clearance reduction set	For corner drives	10 Piece(s)	728950

[*]		#
[24]	Countersunk screw ST4.8 x 16	1
[37]	SEC rebate-clearance reduction CD	1

[7] SEC striker 5

			Nº
V.01	9	100 Piece(s)	212637
V.02	9	100 Piece(s)	212638

[8] SEC cam RC 2 8

		Nº
Insertable	100 Piece(s)	447245

[5] Striker 1

			Nº
V.01	9	100 Piece(s)	728918
V.02	9	100 Piece(s)	728920

[6] Cam, insertable 1

		Nº
Insertable	100 Piece(s)	334671

Espagnolette and connector

[*] SEC espagnolette protection set 1
Large packages
Alternatively:
[8a] SEC flush-encased gearbox set 1 → *from page 180*

		Nº
SEC espagnolette protection set	10 Piece(s)	728952

Contents:

[*]		#
[14]	SEC espagnolette protection	1
[16]	SEC connector	2
[30]	Countersunk screw M5 x 10	2

[9] Cylinder screw M5 x 12 2

			Nº
Cylinder screw	M5x12	100 Piece(s)	728925

[10] Espagnolette support 1

				Nº
Espagnolette support	For Roto Line AL geared-handle	13.5	100 Piece(s)	331937

[11] Roto Line window handle – geared-handle, lockable 1
→ CTL_1
Alternatively:
[a] Roto Line window handle, lockable 1 → CTL_1
Countersunk screw M5 x 30 2

Height-dependent components

[5] Striker

			Nº
V.01	9	100 Piece(s)	728918
V.02	9	100 Piece(s)	728920

≤ 1300	–
1301 – 1800	2
1801 – 2400	4
> 2400	6

[6] Cam, insertable

		Nº
Insertable	100 Piece(s)	334671

≤ 1300	–
1301 – 1800	2
1801 – 2400	4
> 2400	6

[22] Tilt distance restrictor; SH ≤ 800 mm / reduce tilt distance 1

		Nº
For sash stay 500 / 735	10 Piece(s)	502834

INFO
Using the tilt distance restrictor limits the tilt distance of the sash stay to 100 mm.

Weight-dependent components

[*]	**Load transfer set**; S.kg > 100 kg		1
			№
V.01	Left	10 Piece(s)	739694
	Right	10 Piece(s)	739693
V.02	Left	10 Piece(s)	739696
	Right	10 Piece(s)	739695

Contents:

[*]		#
[28]	Support rod	1
[31]	Frame bearing V.01 / V.02	1
[32]	Sash component	1

4.1.6 T&T | 180 kg

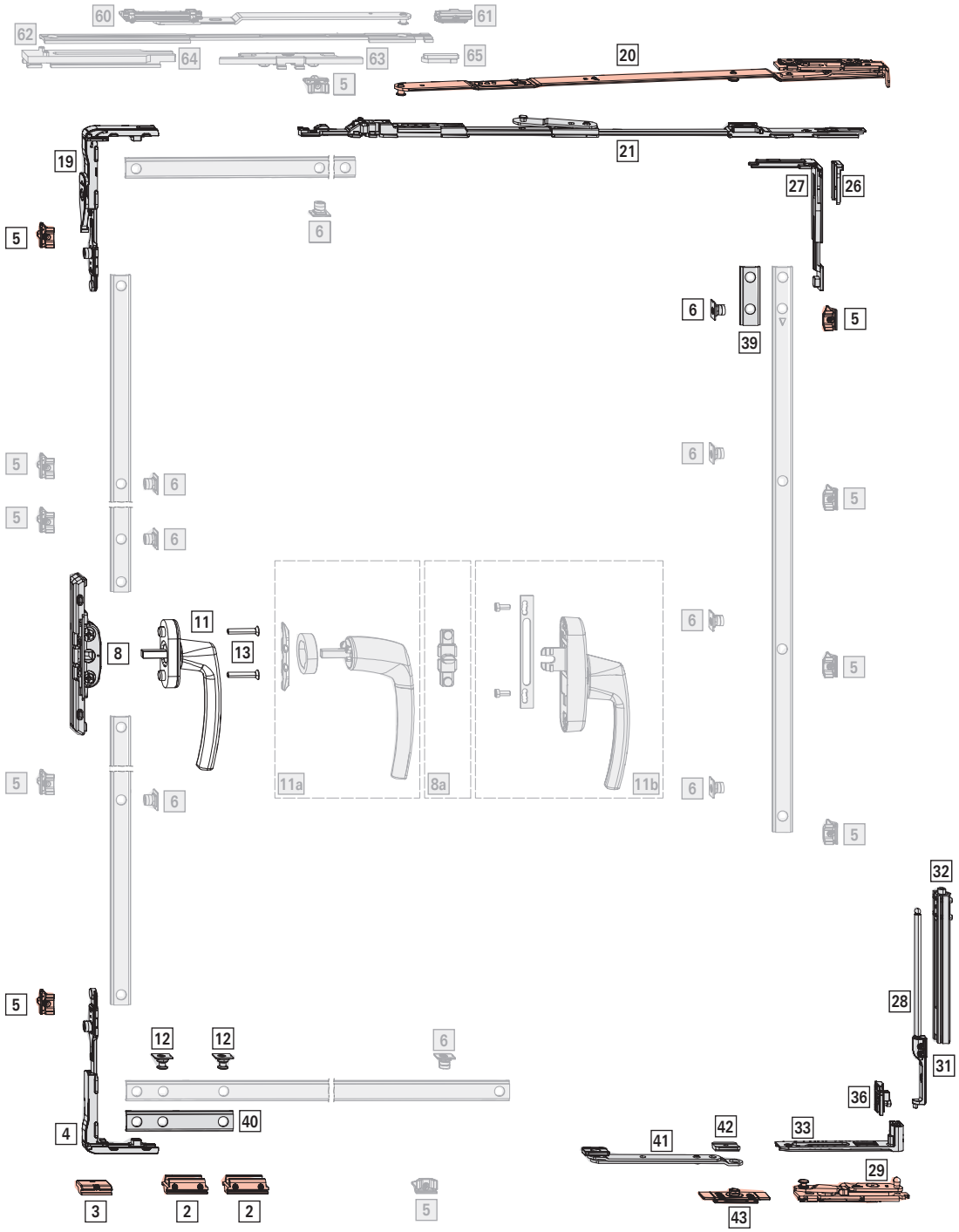
60
61
62
64
63
65
5
20
21
19
27
26
6
39
11
13
8
11a
8a
11b
32
28
31
12
40
4
36
41
42
33
29
3
2
43

Application range

SW: 735 - 1600 mm

SH: 1000 - 3000 mm

S.kg: max. 180 kg

DANGER

Risk of death due to insufficient profile stability!

Insufficient profile stability may cause the sash to fall and cause serious or fatal accidents.

1. The hardware configuration must be checked separately.

   For S.kg 150 - 180 kg, only profiles with a profile assessment that has been approved by Roto are permissible.

INFO

Only use bearings / clamp strips which have been approved for the profile. Information can be obtained from Roto sales representatives.

Basic set

[29] Pivot rest 180 kg with clamp strip — 1

			Nº
No. 1	Left	10 Piece(s)	641328
	Right	10 Piece(s)	641327
No. 3	Left	10 Piece(s)	641326
	Right	10 Piece(s)	641325
No. 4	Left	10 Piece(s)	641330
	Right	10 Piece(s)	641329

[*] Corner hinge set 180 kg — 1

		Nº
Left	10 Piece(s)	641334
Right	10 Piece(s)	641297

Contents:

[*]		#
[33]	Corner hinge	1
[36]	Adjustment piece	1

[*] T&T locking components set — 1

Large packages → *from page 166*

		Nº
V.01	10 Piece(s)	769016
V.02	10 Piece(s)	769017

Contents:

[*]		#
[2]	TF tilt striker	2
[3]	Run-up wedge V.01 / V.02	1
[4]	Corner drive without blocking device, with retaining fork	1
[5]	Striker V.01 / V.02	2
[12]	TF tilt lock bolt	2
[19]	Corner drive with blocking device and retaining fork	1
[40]	Connecting rod, fixed, horizontal, bottom L = 170 mm (CR5)	1

[21] Scissor stay guide — 1

		Nº
735	10 Piece(s)	740838

[20] Sash stay 180 kg — 1

					Nº
735	No. 1	150	Left	10 Piece(s)	641318
		150	Right	10 Piece(s)	641317
	No. 3	150	Left	10 Piece(s)	641320
		150	Right	10 Piece(s)	641319
	No. 4	150	Left	10 Piece(s)	641322
		150	Right	10 Piece(s)	641321

[*] CL corner drive set — 1

Large packages

		Nº
V.01	20 Piece(s)	728842
V.02	20 Piece(s)	728843

Contents:

[*]		#
[5]	Striker V.01 / V.02	2
[6]	Cam, insertable	2
[26]	Retaining fork	1
[27]	CL corner drive	1

[*] Turn restrictor set, with stop — 1

Alternatively:

Turn restrictor set, braked, damped — 1 → *from page 182*

			Nº
Clampable	V.01	10 pieces	740814
	V.02	10 pieces	740835

Contents:

[*]		
[41]	Rotating arm, compl.	1
[42]	Stop	1
[43]	Bearing, compl.	1

[*] Load transfer set — 1

			№
V.01	Left	10 Piece(s)	739694
	Right	10 Piece(s)	739693
V.02	Left	10 Piece(s)	739696
	Right	10 Piece(s)	739695

Contents:

[*]		#
[28]	Support rod	1
[31]	Frame bearing V.01 / V.02	1
[32]	Sash component	1

[39] Connecting rod, fixed, vertical (CR4) — 1

→ *from page 175*

Espagnolette and connector

[8] Flush-encased gearbox without mishandling device — 1

Alternatively:

T connector → *from page 172*

		№
Flush-encased gearbox without blocking device	10 Piece(s)	378338

[11] Roto Line window handle – standard — 1

→ CTL_1

Alternatively:

[a]	Roto Line window handle – handle without escutcheon	1	→ CTL_1
	Ring for handle without escutcheon	1	
	Mounting plate	1	
[b]	Roto Line window handle – geared-handle	1	→ CTL_1
	Espagnolette support	1	→ *from page 172*
	Cylinder screw M5 x 12	2	→ *from page 178*

[13] Countersunk screw M5 x 30 — 1

			№
Countersunk screw	M5x30	100 Piece(s)	212501

Height-dependent components

[5] Striker

			№
V.01	9	100 Piece(s)	728918
V.02	9	100 Piece(s)	728920

≤ 1300	–
1301 – 1800	1
1801 – 2400	3
> 2400	5

[6] Cam, insertable

		№
Insertable	100 Piece(s)	334671

≤ 1300	–
1301 – 1800	1
1801 – 2400	3
> 2400	5

Width-dependent components

[*] T&T additional stay arm set | 180 kg[6]

			№
V.01	160	10 Piece(s)	738559
V.02	160	10 Piece(s)	738560

Contents:

[*]		#
[60]	Additional scissor stay arm, compl. V.01 / V.02	1
[61]	Retaining spring, compl.	1
[62]	Coupling rod	1
[63]	Scissor stay deadbolt	1
[64]	Scissor stay guide, compl. T&T	1
[65]	T&T stop	1

≤ 1300	–
> 1300	1

[5] Striker

			№
V.01	9	100 Piece(s)	728918
V.02	9	100 Piece(s)	728920

≤ 1300	–
> 1300	2

[6] Installation of the mishandling device on the corner drive / flush-encased gearbox is prescribed in accordance with DIN 18360 (German construction contract procedures (VOB)).

[6] Cam, insertable		
		№
Insertable	100 Piece(s)	334671
≤ 1300		–
> 1300		2

4.1.7 T&T | RC 2 | 180 kg

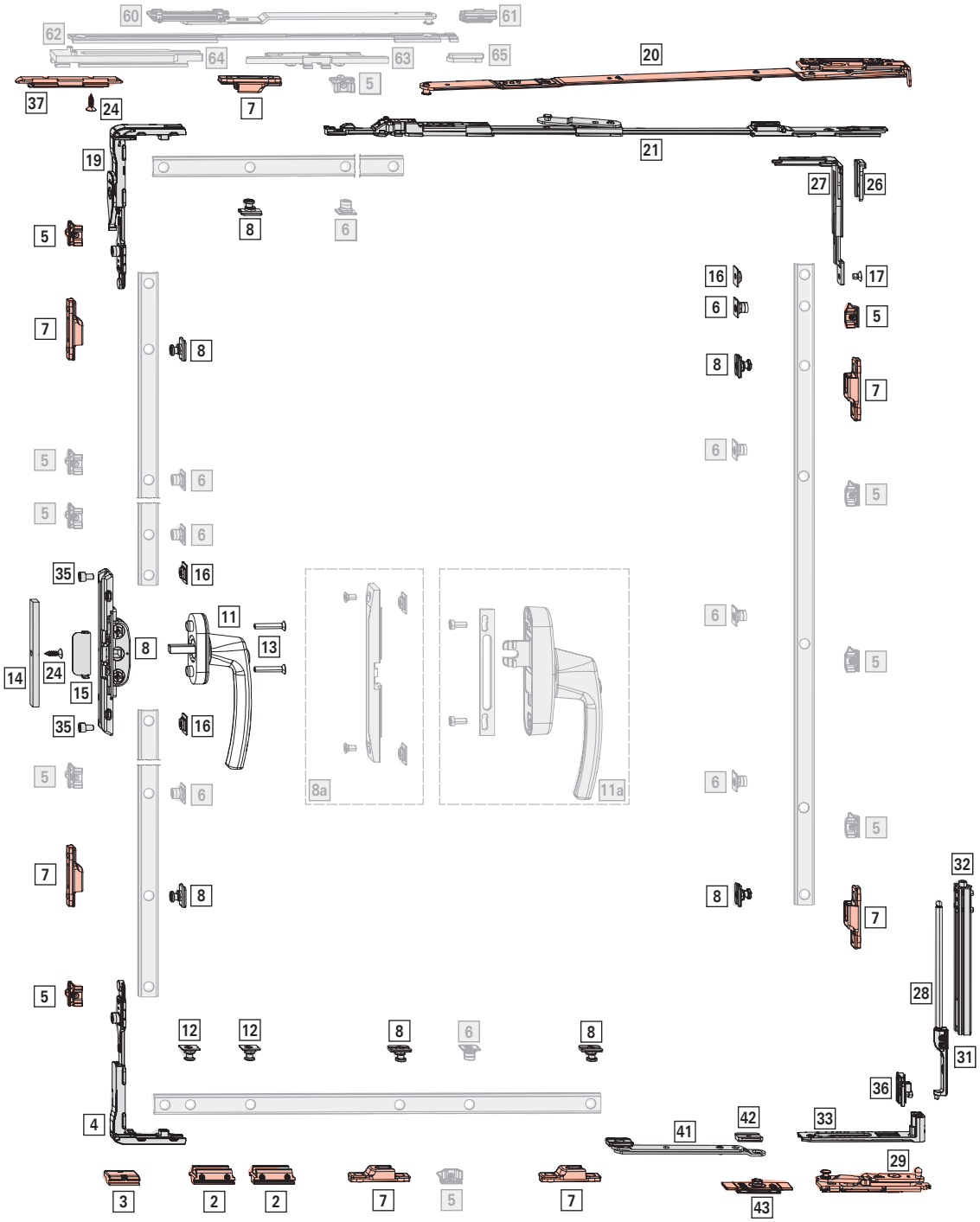

Application range

SW: 800 - 1600 mm

SH: 1000 - 3000 mm

S.kg: max. 180 kg

DANGER

Risk of death due to insufficient profile stability!

Insufficient profile stability may cause the sash to fall and cause serious or fatal accidents.

1. The hardware configuration must be checked separately.

   For S.kg 150 - 180 kg, only profiles with a profile assessment that has been approved by Roto are permissible.

INFO

Only use bearings / clamp strips which have been approved for the profile. Information can be obtained from Roto sales representatives.

Basic set

[29] Pivot rest 180 kg with clamp strip — 1

			№
No. 1	Left	10 Piece(s)	641328
	Right	10 Piece(s)	641327
No. 3	Left	10 Piece(s)	641326
	Right	10 Piece(s)	641325
No. 4	Left	10 Piece(s)	641330
	Right	10 Piece(s)	641329

[*] Corner hinge set 180 kg — 1

		№
Left	10 Piece(s)	641334
Right	10 Piece(s)	641297

Contents:

[*]		#
[33]	Corner hinge	1
[36]	Adjustment piece	1

[*] T&T locking components set — 1

Large packages → *from page 166*

		№
V.01	10 Piece(s)	769016
V.02	10 Piece(s)	769017

Contents:

[*]		#
[2]	TF tilt striker	2
[3]	Run-up wedge V.01 / V.02	2
[4]	Corner drive without blocking device, with retaining fork	1
[5]	Striker V.01 / V.02	2
[12]	TF tilt lock bolt	2
[19]	Corner drive with blocking device and retaining fork	1

[21] Scissor stay guide — 1

		№
735	10 Piece(s)	740838

[20] Sash stay 180 kg — 1

					№
735	No. 1	150	Left	10 Piece(s)	641318
		150	Right	10 Piece(s)	641317
	No. 3	150	Left	10 Piece(s)	641320
		150	Right	10 Piece(s)	641319
	No. 4	150	Left	10 Piece(s)	641322
		150	Right	10 Piece(s)	641321

[*] CL SEC corner drive set — 1

Large packages

		№
SEC corner drive CL set with retaining fork	10 Piece(s)	728944

[*]		#
[16]	SEC connector	1
[17]	Countersunk screw M5 x 7	1
[26]	SEC retaining fork	1
[27]	CL SEC corner drive	1

[*] SEC rebate-clearance reduction set — 1

Large packages → *from page 176*

			№
SEC rebate-clearance reduction set	For corner drives	10 Piece(s)	728950

[*]		#
[24]	Countersunk screw ST4.8 x 16	1
[37]	SEC rebate-clearance reduction CD	1

[7] SEC striker — 7

			№
V.01	9	100 Piece(s)	212637
V.02	9	100 Piece(s)	212638

[8]	SEC cam	RC 2	7
Insertable	100 Piece(s)		447245

[5]	Striker		1
V.01	9	100 Piece(s)	728918
V.02	9	100 Piece(s)	728920

[6]	Cam, insertable	1
Insertable	100 Piece(s)	334671

[*]	Turn restrictor set, with stop	1
	Alternatively:	
	Turn restrictor set, braked, damped	1 → *from page 182*

Clampable	V.01	10 pieces	740814
	V.02	10 pieces	740835

Contents:

[*]		
[41]	Rotating arm, compl.	1
[42]	Stop	1
[43]	Bearing, compl.	1

[*]	Load transfer set	1
V.01	Left	10 Piece(s)	739694
	Right	10 Piece(s)	739693
V.02	Left	10 Piece(s)	739696
	Right	10 Piece(s)	739695

Contents:

[*]		#
[28]	Support rod	1
[31]	Frame bearing V.01 / V.02	1
[32]	Sash component	1

Espagnolette and connector

[*]	SEC flush-encased gearbox set	1
	Large packages	→ *from page 173*
	Alternatively:	
[8a]	SEC espagnolette protection set	1 → *from page 172*

SEC flush-encased gearbox set	10 Piece(s)	728947

Contents:

[*]		#
[8]	SEC flush-encased gearbox without blocking device	1
[16]	SEC connector	2
[35]	Cylinder screw M5 x 8	2

[14]	SEC rebate-clearance reduction flush-encased gearbox	1
SEC rebate-clearance reduction ESP	For Roto Line lock. handles	50 Piece(s)	334360

[15]	SEC drilling protection	1
SEC drilling protection	For Roto Line lock. handles	10 Piece(s)	487406

[24]	Countersunk screw ST4.8 x 16	1
Countersunk screw	ST4,8x16	100 Piece(s)	728933

[11]	Roto Line window handle, lockable	1 → CTL_1
	Alternatively:	
[a]	Roto Line window handle – geared-handle, lockable	1 → CTL_1
	Espagnolette support	1 → *from page 172*
	Cylinder screw M5 x 12	2 → *from page 178*

[13]	Countersunk screw M5 x 30	1
Countersunk screw	M5x30	100 Piece(s)	212501

Height-dependent components

[5]	Striker		
V.01	9	100 Piece(s)	728918
V.02	9	100 Piece(s)	728920

≤ 1300	–
1301 – 1800	2
1801 – 2400	4
> 2400	6

[6] Cam, insertable		
		№
Insertable	100 Piece(s)	334671

≤ 1300	–
1301 – 1800	2
1801 – 2400	4
> 2400	6

Width-dependent components

[*] T&T additional stay arm set | 180 kg[7]			
			№
V.01	160	10 Piece(s)	738559
V.02	160	10 Piece(s)	738560

Contents:

[*]		#
[60]	Additional scissor stay arm, compl. V.01 / V.02	1
[61]	Retaining spring, compl.	1
[62]	Coupling rod	1
[63]	Scissor stay deadbolt	1
[64]	Scissor stay guide, compl. T&T	1
[65]	T&T stop	1

≤ 1300	–
> 1300	1

[5] Striker			
			№
V.01	9	100 Piece(s)	728918
V.02	9	100 Piece(s)	728920

≤ 1300	–
> 1300	2

[6] Cam, insertable		
		№
Insertable	100 Piece(s)	334671

≤ 1300	–
> 1300	2

[7] Installation of the mishandling device on the corner drive / flush-encased gearbox is prescribed in accordance with DIN 18360 (German construction contract procedures (VOB)).

4.1.8 T&T | RC 3 | 180 kg

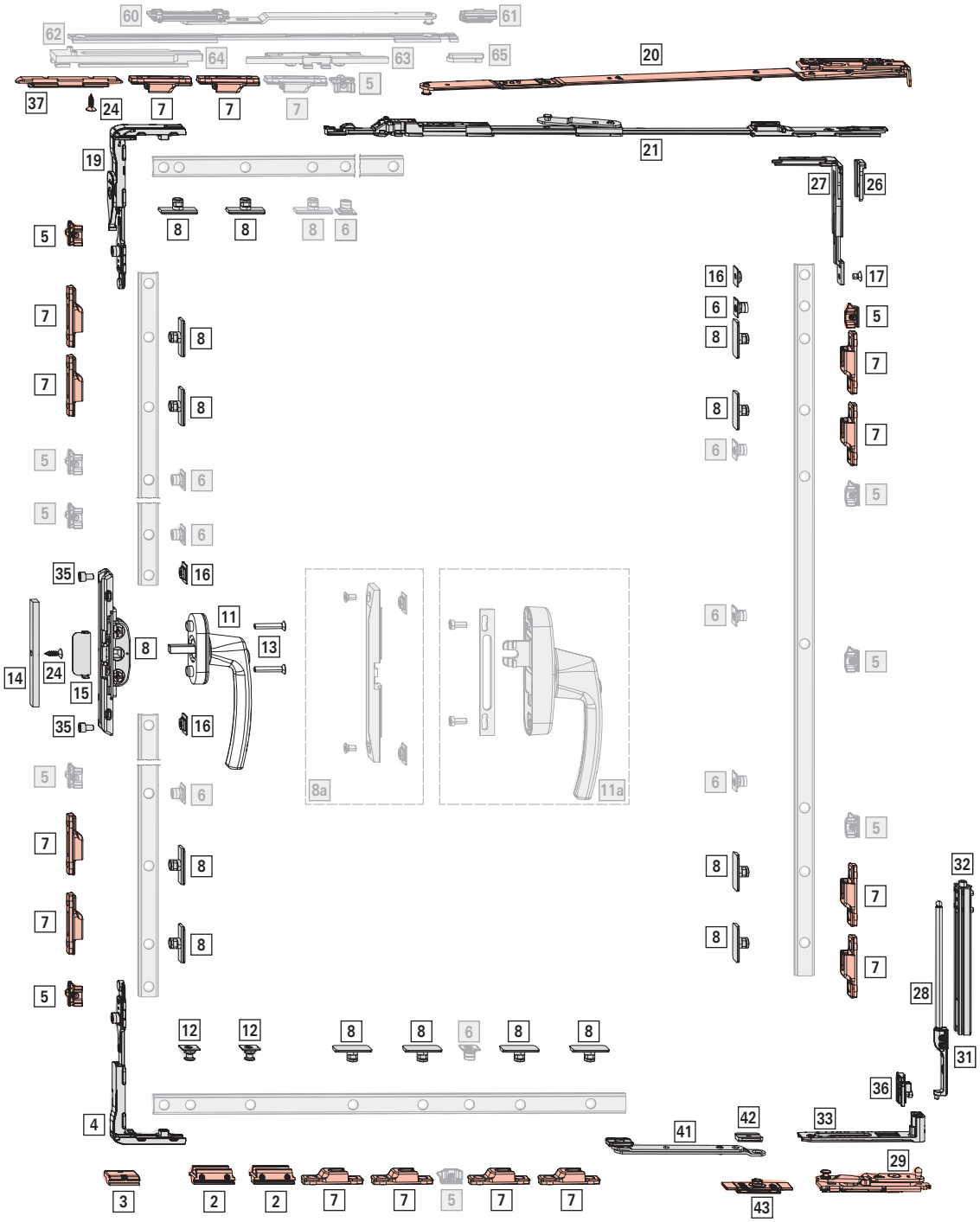

Application range

SW: 915 - 1600 mm

SH: 1000 - 3000 mm

S.kg: max. 180 kg

DANGER

Risk of death due to insufficient profile stability!

Insufficient profile stability may cause the sash to fall and cause serious or fatal accidents.

1. The hardware configuration must be checked separately.

   For S.kg 150 - 180 kg, only profiles with a profile assessment that has been approved by Roto are permissible.

INFO

Only use bearings / clamp strips which have been approved for the profile. Information can be obtained from Roto sales representatives.

Basic set

[29] Pivot rest 180 kg with clamp strip 1

			№
No. 1	Left	10 Piece(s)	641328
	Right	10 Piece(s)	641327
No. 3	Left	10 Piece(s)	641326
	Right	10 Piece(s)	641325
No. 4	Left	10 Piece(s)	641330
	Right	10 Piece(s)	641329

[*] Corner hinge set 180 kg 1

		№
Left	10 Piece(s)	641334
Right	10 Piece(s)	641297

Contents:

[*]		#
[33]	Corner hinge	1
[36]	Adjustment piece	1

[*] T&T locking components set 1

Large packages → *from page 166*

		№
V.01	10 Piece(s)	769016
V.02	10 Piece(s)	769017

Contents:

[*]		#
[2]	TF tilt striker	2
[3]	Run-up wedge V.01 / V.02	2
[4]	Corner drive without blocking device, with retaining fork	1
[5]	Striker V.01 / V.02	2
[12]	TF tilt lock bolt	2
[19]	Corner drive with blocking device and retaining fork	1

[21] Scissor stay guide 1

		№
735	10 Piece(s)	740838

[20] Sash stay 180 kg 1

					№
735	No. 1	150	Left	10 Piece(s)	641318
		150	Right	10 Piece(s)	641317
	No. 3	150	Left	10 Piece(s)	641320
		150	Right	10 Piece(s)	641319
	No. 4	150	Left	10 Piece(s)	641322
		150	Right	10 Piece(s)	641321

[*] CL SEC corner drive set 1

Large packages

		№
SEC corner drive CL set with retaining fork	10 Piece(s)	728944

[*]		#
[16]	SEC connector	1
[17]	Countersunk screw M5 x 7	1
[26]	SEC retaining fork	1
[27]	CL SEC corner drive	1

[*] SEC rebate-clearance reduction set 1

Large packages → *from page 176*

			№
SEC rebate-clearance reduction set	For corner drives	10 Piece(s)	728950

[*]		#
[24]	Countersunk screw ST4.8 x 16	1
[37]	SEC rebate-clearance reduction CD	1

[7] SEC striker 14

			№
V.01	9	100 Piece(s)	212637
V.02	9	100 Piece(s)	212638

[8] SEC cam	RC 3	14
Insertable	100 Piece(s)	443530

[5] Striker			1
V.01	9	100 Piece(s)	728918
V.02	9	100 Piece(s)	728920

[6] Cam, insertable		1
Insertable	100 Piece(s)	334671

[*] Turn restrictor set, with stop 1

Alternatively:

Turn restrictor set, braked, damped 1 → *from page 182*

Clampable	V.01	10 pieces	740814
	V.02	10 pieces	740835

Contents:

[*]		
[41]	Rotating arm, compl.	1
[42]	Stop	1
[43]	Bearing, compl.	1

[*] Load transfer set			1
V.01	Left	10 Piece(s)	739694
	Right	10 Piece(s)	739693
V.02	Left	10 Piece(s)	739696
	Right	10 Piece(s)	739695

Contents:

[*]		#
[28]	Support rod	1
[31]	Frame bearing V.01 / V.02	1
[32]	Sash component	1

Espagnolette and connector

[*] SEC flush-encased gearbox set 1

Large packages → *from page 173*

Alternatively:

[8a] SEC espagnolette protection set 1 → *from page 172*

SEC flush-encased gearbox set	10 Piece(s)	728947

Contents:

[*]		#
[8]	SEC flush-encased gearbox without blocking device	1
[16]	SEC connector	2
[35]	Cylinder screw M5 x 8	2

[14] SEC rebate-clearance reduction flush-encased gearbox			1
SEC rebate-clearance reduction ESP	For Roto Line lock. handles	50 Piece(s)	334360

[15] SEC drilling protection			1
SEC drilling protection	For Roto Line lock. handles	10 Piece(s)	487406

[24] Countersunk screw ST4.8 x 16			1
Countersunk screw	ST4,8x16	100 Piece(s)	728933

[11] Roto Line window handle, lockable 1 → CTL_1

Alternatively:

[a] Roto Line window handle – geared-handle, lockable 1 → CTL_1

Espagnolette support 1 → *from page 172*

Cylinder screw M5 x 12 2 → *from page 178*

[13] Countersunk screw M5 x 30			1
Countersunk screw	M5x30	100 Piece(s)	212501

Height-dependent components

[5] Striker			
V.01	9	100 Piece(s)	728918
V.02	9	100 Piece(s)	728920

≤ 1300	–
1301 – 1800	2
1801 – 2400	4
> 2400	6

[6] Cam, insertable

Insertable	100 Piece(s)	334671

≤ 1300	–
1301 – 1800	2
1801 – 2400	4
> 2400	6

Width-dependent components

[*] T&T additional stay arm set | 180 kg[8]

V.01	160	10 Piece(s)	738559
V.02	160	10 Piece(s)	738560

Contents:

[*]		#
[60]	Additional scissor stay arm, compl. V.01 / V.02	1
[61]	Retaining spring, compl.	1
[62]	Coupling rod	1
[63]	Scissor stay deadbolt	1
[64]	Scissor stay guide, compl. T&T	1
[65]	T&T stop	1

≤ 1300	–
> 1300	1

[5] Striker

V.01	9	100 Piece(s)	728918
V.02	9	100 Piece(s)	728920

≤ 1300	–
> 1300	2

[6] Cam, insertable

Insertable	100 Piece(s)	334671

≤ 1300	–
> 1300	2

[7] SEC striker

V.01	9	100 Piece(s)	212637
V.02	9	100 Piece(s)	212638

≤ 1100	–
> 1100	1

[8] SEC cam RC 3

Insertable	100 Piece(s)	443530

≤ 1100	–
> 1100	1

[8] Installation of the mishandling device on the corner drive / flush-encased gearbox is prescribed in accordance with DIN 18360 (German construction contract procedures (VOB)).

4.2 TiltFirst hardware / Tilt-Only hardware, handle at the side

4.2.1 TF / TiSs | 150 kg

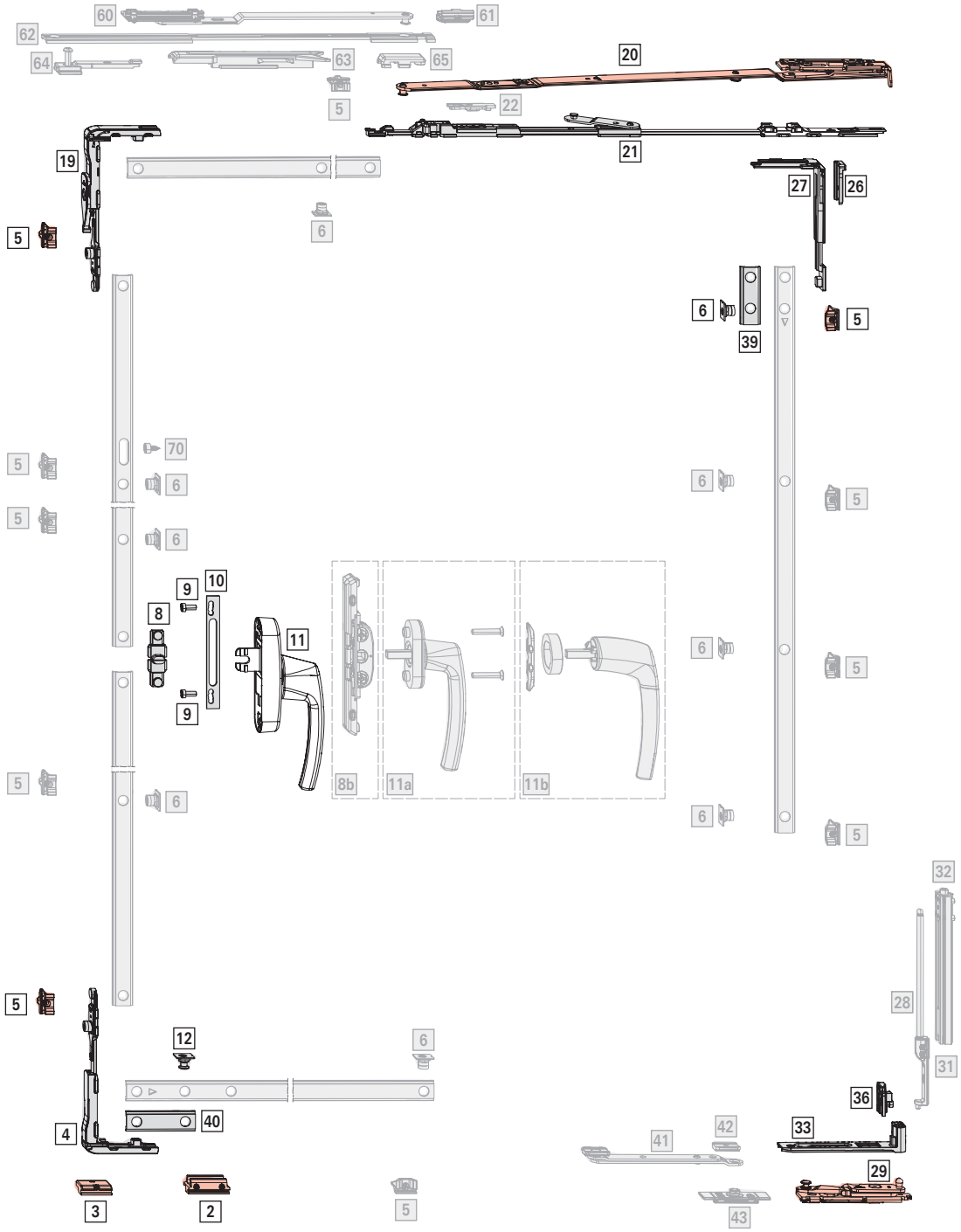

Application range

SW: 500 - 1600 mm

SH: 555 - 3000 mm

S.kg: max. 150 kg

INFO

Only use bearings / clamp strips which have been approved for the profile. Information can be obtained from Roto sales representatives.

Basic set

[29] Pivot rest with clamp strip — 1

			Nº
No. 1	Left	10 Piece(s)	624970
	Right	10 Piece(s)	624969
No. 3	Left	10 Piece(s)	624972
	Right	10 Piece(s)	624971
No. 4	Left	10 Piece(s)	624974
	Right	10 Piece(s)	624973

[*] Corner hinge set — 1

		Nº
Left	10 Piece(s)	739700
Right	10 Piece(s)	739699

Contents:

[*]		#
[33]	Corner hinge	1
[36]	Adjustment piece	1

[*] TF locking components set — 1

		Nº
V.01	10 Piece(s)	728976
V.02	10 Piece(s)	728977

Contents:

[*]		#
[2]	TF tilt striker	1
[3]	Run-up wedge V.01 / V.02	1
[4]	Corner drive without blocking device, with retaining fork	1
[5]	Striker V.01 / V.02	2
[12]	TF tilt lock bolt	1
[19]	Corner drive with blocking device and retaining fork	1

[21] TF scissor stay guide — 1

		Nº
500	10 Piece(s)	740837
735	10 Piece(s)	740839

≤ 735	500
> 735	735

[20] Sash stay — 1

					Nº
500	No. 1	130	Left	10 Piece(s)	624945
		130	Right	10 Piece(s)	624944
	No. 3	130	Left	10 Piece(s)	624951
		130	Right	10 Piece(s)	624950
	No. 4	130	Left	10 Piece(s)	624957
		130	Right	10 Piece(s)	624956
735	No. 1	150	Left	10 Piece(s)	624947
		150	Right	10 Piece(s)	624946
	No. 3	150	Left	10 Piece(s)	624953
		150	Right	10 Piece(s)	624952
	No. 4	150	Left	10 Piece(s)	624959
		150	Right	10 Piece(s)	624958

≤ 735	500
> 735	735

[*] CL corner drive set — 1

Large packages

		Nº
V.01	20 Piece(s)	728842
V.02	20 Piece(s)	728843

Contents:

[*]		#
[5]	Striker V.01 / V.02	2
[6]	Cam, insertable	2
[26]	Retaining fork	1
[27]	CL corner drive	1

[39] Connecting rod, fixed, vertical (CR4) — 1

→ *from page 175*

[40] Connecting rod, fixed, horizontal, bottom (CR5)

→ *from page 175*

Designed as Tilt-Only hardware, handle at the side

[70] Locking sleeve — 1

				Nº
Locking sleeve	Blocks the movement of the espagnolette (90°)	1	100 Piece(s)	738549

Espagnolette and connector

[*]	**T connector set**	1
	Alternatively:	
[8a]	Flush-encased gearbox	1 → *from page 173*

		№
AL T connector set	10 Piece(s)	728981

Contents:

[*]		
[8]	T connector	1
[9]	Cylinder screw M5 x 12	2

[10]	**Espagnolette support**	1

				№
Espagnolette support	For Roto Line AL geared-handle	13.5	100 Piece(s)	331937

[11]	**Roto Line window handle – geared-handle**	1 → CTL_1
	Alternatively:	
[a]	Roto Line window handle – standard	1 → CTL_1
	Countersunk screw M5 x 30	2
[b]	Roto Line window handle – handle without escutcheon	1 → CTL_1
	Ring for handle without escutcheon	1
	Mounting plate	1

Height-dependent components

[5]	**Striker**			
	V.01	9	100 Piece(s)	728918
	V.02	9	100 Piece(s)	728920

≤ 1300	–
1301 – 1800	1
1801 – 2400	3
> 2400	5

[6]	**Cam, insertable**		
	Insertable	100 Piece(s)	334671

≤ 1300	–
1301 – 1800	1
1801 – 2400	3
> 2400	5

[22]	**Tilt distance restrictor**; SH ≤ 800 mm / reduce tilt distance	1

		№
For sash stay 500 / 735	10 Piece(s)	502834

INFO
Using the tilt distance restrictor limits the tilt distance of the sash stay to 100 mm.

Width-dependent components

[*]	**TF additional stay arm set | 150 kg**[9]; SW > 1300 mm			
	V.01	160	10 Piece(s)	728978
	V.02	160	10 Piece(s)	728979

Contents:

[*]		#
[60]	Additional scissor stay arm, compl. V.01 / V.02	1
[61]	Retaining spring, compl.	1
[62]	Coupling rod	1
[63]	Scissor stay guide, compl. TF	1
[64]	Additional stay arm stop, compl. TF | 150 kg	1
[65]	Coupler component, compl.	1

≤ 1300	–
> 1300	1

[5]	**Striker**			
	V.01	9	100 Piece(s)	728918
	V.02	9	100 Piece(s)	728920

≤ 1300	–
> 1300	2

[6]	**Cam, insertable**	
	Insertable	100 Piece(s)	334671

≤ 1300	–
> 1300	2

[*]	**Turn restrictor set, with stop**	1
	Alternatively:	

[9] Installation of the mishandling device on the corner drive / flush-encased gearbox is prescribed in accordance with DIN 18360 (German construction contract procedures (VOB)).

Turn restrictor set, braked, damped		1	→ *from page 182*
			№
Clampable	V.01	10 pieces	740814
	V.02	10 pieces	740835

Contents:

[*]		
[41]	Rotating arm, compl.	1
[42]	Stop	1
[43]	Bearing, compl.	1

≤ 1200	–
> 1200	1

Weight-dependent components

[*]	**Load transfer set**; S.kg > 100 kg		1
			№
V.01	Left	10 Piece(s)	739694
	Right	10 Piece(s)	739693
V.02	Left	10 Piece(s)	739696
	Right	10 Piece(s)	739695

Contents:

[*]		#
[28]	Support rod	1
[31]	Frame bearing V.01 / V.02	1
[32]	Sash component	1

4.2.2 TF / TiSs | RC 2 | 150 kg

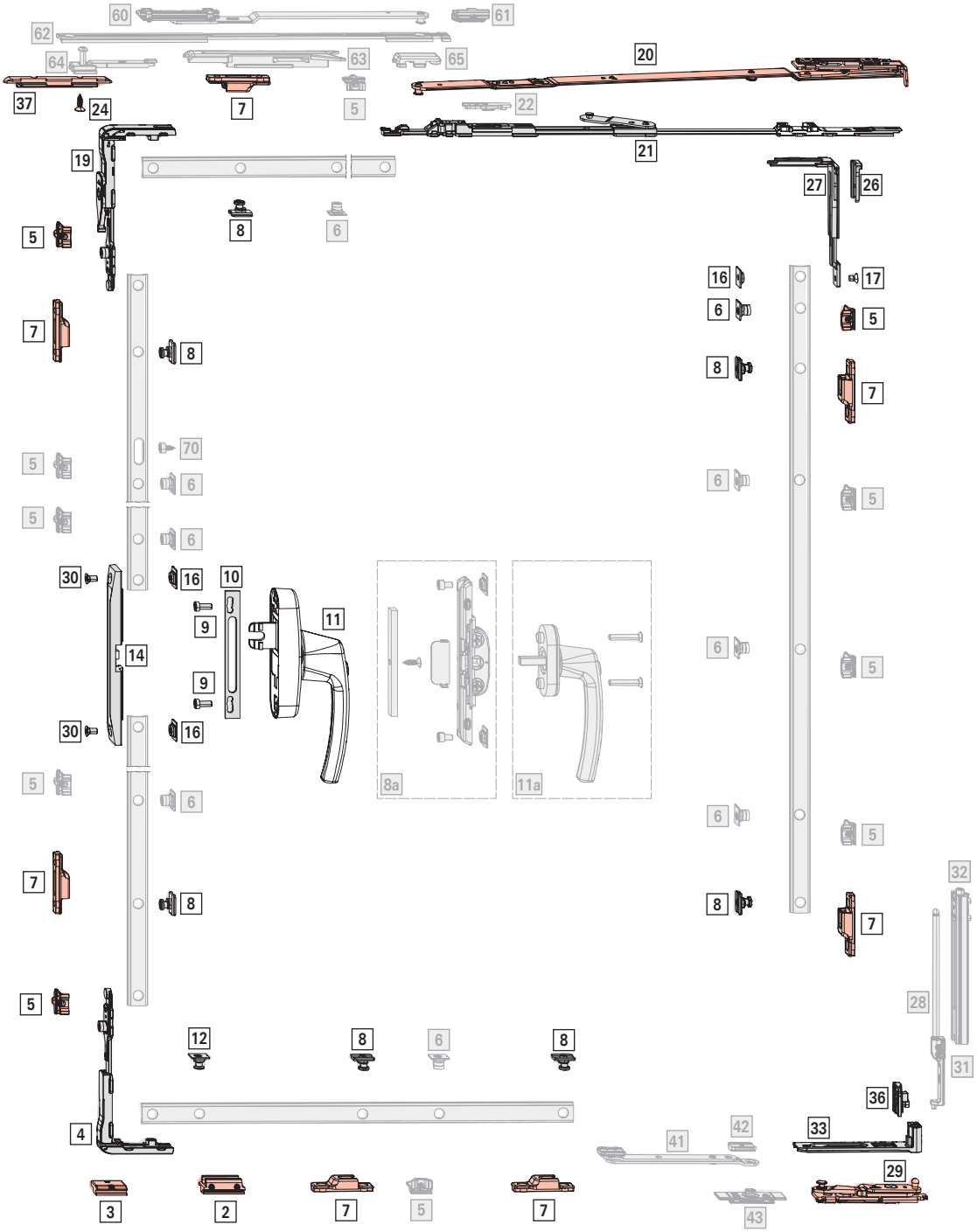

Application range

SW: 625 - 1600 mm

SH: 720 - 3000 mm

S.kg: max. 150 kg

INFO

Only use bearings / clamp strips which have been approved for the profile. Information can be obtained from Roto sales representatives.

Basic set

[29] Pivot rest with clamp strip — 1

			Nº
No. 1	Left	10 Piece(s)	624970
	Right	10 Piece(s)	624969
No. 3	Left	10 Piece(s)	624972
	Right	10 Piece(s)	624971
No. 4	Left	10 Piece(s)	624974
	Right	10 Piece(s)	624973

[*] Corner hinge set — 1

		Nº
Left	10 Piece(s)	739700
Right	10 Piece(s)	739699

Contents:

[*]		#
[33]	Corner hinge	1
[36]	Adjustment piece	1

[*] TF locking components set — 1

		Nº
V.01	10 Piece(s)	728976
V.02	10 Piece(s)	728977

Contents:

[*]		#
[2]	TF tilt striker	1
[3]	Run-up wedge V.01 / V.02	1
[4]	Corner drive without blocking device, with retaining fork	1
[5]	Striker V.01 / V.02	2
[12]	TF tilt lock bolt	1
[19]	Corner drive with blocking device and retaining fork	1

[21] TF scissor stay guide — 1

		Nº
500	10 Piece(s)	740837
735	10 Piece(s)	740839

≤ 900	500
≥ 800	735

[20] Sash stay — 1

					Nº
500	No. 1	130	Left	10 Piece(s)	624945
		130	Right	10 Piece(s)	624944
	No. 3	130	Left	10 Piece(s)	624951
		130	Right	10 Piece(s)	624950
	No. 4	130	Left	10 Piece(s)	624957
		130	Right	10 Piece(s)	624956
735	No. 1	150	Left	10 Piece(s)	624947
		150	Right	10 Piece(s)	624946
	No. 3	150	Left	10 Piece(s)	624953
		150	Right	10 Piece(s)	624952
	No. 4	150	Left	10 Piece(s)	624959
		150	Right	10 Piece(s)	624958

≤ 900	500
≥ 800	735

[*] CL SEC corner drive set — 1
Large packages

		Nº
SEC corner drive CL set with retaining fork	10 Piece(s)	728944

[*]		#
[16]	SEC connector	1
[17]	Countersunk screw M5 x 7	1
[26]	SEC retaining fork	1
[27]	CL SEC corner drive	1

[*] SEC rebate-clearance reduction set — 1
Large packages → *from page 176*

			Nº
SEC rebate-clearance reduction set	For corner drives	10 Piece(s)	728950

[*]		#
[24]	Countersunk screw ST4.8 x 16	1
[37]	SEC rebate-clearance reduction CD	1

[7] SEC striker — 7

			Nº
V.01	9	100 Piece(s)	212637
V.02	9	100 Piece(s)	212638

[8]	SEC cam	RC 2	7
Insertable	100 Piece(s)		№ 447245

[5]	Striker		1
V.01	9	100 Piece(s)	728918
V.02	9	100 Piece(s)	728920

[6]	Cam, insertable	1
Insertable	100 Piece(s)	№ 334671

Designed as Tilt-Only hardware, handle at the side

[70]	Locking sleeve			1
Locking sleeve	Blocks the movement of the espagnolette (90°)	1	100 Piece(s)	№ 738549

Espagnolette and connector

[*]	SEC espagnolette protection set Large packages Alternatively:	1
[8a]	SEC flush-encased gearbox set	1 → *from page 180*
SEC espagnolette protection set	10 Piece(s)	№ 728952

Contents:

[*]		#
[14]	SEC espagnolette protection	1
[16]	SEC connector	2
[30]	Countersunk screw M5 x 10	2

[9]	Cylinder screw M5 x 12		2
Cylinder screw	M5x12	100 Piece(s)	№ 728925

[10]	Espagnolette support			1
Espagnolette support	For Roto Line AL geared-handle	13.5	100 Piece(s)	№ 331937

[11]	Roto Line window handle – geared-handle, lockable Alternatively:	1 → CTL_1
[a]	Roto Line window handle, lockable	1 → CTL_1
	Countersunk screw M5 x 30	2

Height-dependent components

[5]	Striker		
V.01	9	100 Piece(s)	№ 728918
V.02	9	100 Piece(s)	728920

≤ 1300	–
1301 – 1800	2
1801 – 2400	4
> 2400	6

[6]	Cam, insertable	
Insertable	100 Piece(s)	№ 334671

≤ 1300	–
1301 – 1800	2
1801 – 2400	4
> 2400	6

[22]	**Tilt distance restrictor**; SH ≤ 800 mm / reduce tilt distance	1
For sash stay 500 / 735	10 Piece(s)	№ 502834

INFO
Using the tilt distance restrictor limits the tilt distance of the sash stay to 100 mm.

Width-dependent components

[*]	**TF additional stay arm set | 150 kg**[10]; SW > 1300 mm	
V.01	160	№ 728978
V.02	160	728979

Contents:

[*]		#
[60]	Additional scissor stay arm, compl. V.01 / V.02	1
[61]	Retaining spring, compl.	1
[62]	Coupling rod	1
[63]	Scissor stay guide, compl. TF	1
[64]	Additional stay arm stop, compl. TF	1

[10] Installation of the mishandling device on the corner drive / flush-encased gearbox is prescribed in accordance with DIN 18360 (German construction contract procedures (VOB)).

[*]		#
[65]	Coupler component, compl.	1

≤ 1300	–
> 1300	1

[5] Striker

			№
V.01	9	100 Piece(s)	728918
V.02	9	100 Piece(s)	728920

≤ 1300	–
> 1300	2

[6] Cam, insertable

		№
Insertable	100 Piece(s)	334671

≤ 1300	–
> 1300	2

[*] Turn restrictor set, with stop 1

Alternatively:

Turn restrictor set, braked, damped 1 → *from page 182*

			№
Clampable	V.01	10 pieces	740814
	V.02	10 pieces	740835

Contents:

[*]		
[41]	Rotating arm, compl.	1
[42]	Stop	1
[43]	Bearing, compl.	1

≤ 1200	–
> 1200	1

Weight-dependent components

[*] Load transfer set; S.kg > 100 kg 1

			№
V.01	Left	10 Piece(s)	739694
	Right	10 Piece(s)	739693
V.02	Left	10 Piece(s)	739696
	Right	10 Piece(s)	739695

Contents:

[*]		#
[28]	Support rod	1
[31]	Frame bearing V.01 / V.02	1
[32]	Sash component	1

4.2.3 TF / TiSs | RC 3 | 150 kg

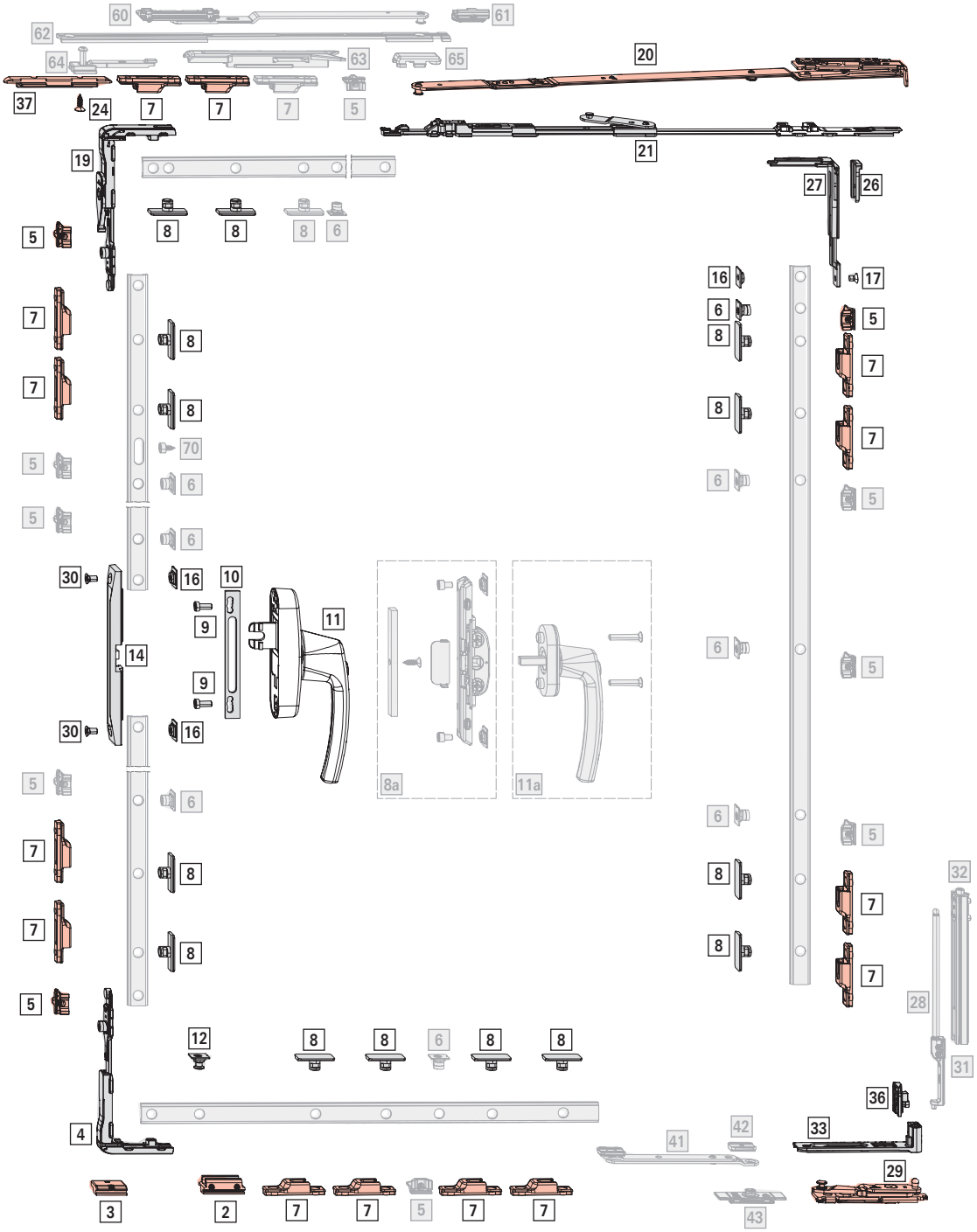

Application range

SW: 700 - 1600 mm

SH: 870 - 3000 mm

S.kg: max. 150 kg

INFO

Only use bearings / clamp strips which have been approved for the profile. Information can be obtained from Roto sales representatives.

Basic set

[29] Pivot rest with clamp strip — 1

			Nº
No. 1	Left	10 Piece(s)	624970
	Right	10 Piece(s)	624969
No. 3	Left	10 Piece(s)	624972
	Right	10 Piece(s)	624971
No. 4	Left	10 Piece(s)	624974
	Right	10 Piece(s)	624973

[*] Corner hinge set — 1

		Nº
Left	10 Piece(s)	739700
Right	10 Piece(s)	739699

Contents:

[*]		#
[33]	Corner hinge	1
[36]	Adjustment piece	1

[*] TF locking components set — 1

		Nº
V.01	10 Piece(s)	728976
V.02	10 Piece(s)	728977

Contents:

[*]		#
[2]	TF tilt striker	1
[3]	Run-up wedge V.01 / V.02	1
[4]	Corner drive without blocking device, with retaining fork	1
[5]	Striker V.01 / V.02	2
[12]	TF tilt lock bolt	1
[19]	Corner drive with blocking device and retaining fork	1

[21] TF scissor stay guide — 1

		Nº
500	10 Piece(s)	740837
735	10 Piece(s)	740839

≤ 900	500
≥ 875	735

[20] Sash stay — 1

					Nº
500	No. 1	130	Left	10 Piece(s)	624945
		130	Right	10 Piece(s)	624944
	No. 3	130	Left	10 Piece(s)	624951
		130	Right	10 Piece(s)	624950
	No. 4	130	Left	10 Piece(s)	624957
		130	Right	10 Piece(s)	624956
735	No. 1	150	Left	10 Piece(s)	624947
		150	Right	10 Piece(s)	624946
	No. 3	150	Left	10 Piece(s)	624953
		150	Right	10 Piece(s)	624952
	No. 4	150	Left	10 Piece(s)	624959
		150	Right	10 Piece(s)	624958

≤ 900	500
≥ 875	735

[*] CL SEC corner drive set — 1
Large packages

		Nº
SEC corner drive CL set with retaining fork	10 Piece(s)	728944

[*]		#
[16]	SEC connector	1
[17]	Countersunk screw M5 x 7	1
[26]	SEC retaining fork	1
[27]	CL SEC corner drive	1

[*] SEC rebate-clearance reduction set — 1
Large packages → *from page 176*

			Nº
SEC rebate-clearance reduction set	For corner drives	10 Piece(s)	728950

[*]		#
[24]	Countersunk screw ST4.8 x 16	1
[37]	SEC rebate-clearance reduction CD	1

[7] SEC striker — 14

			Nº
V.01	9	100 Piece(s)	212637
V.02	9	100 Piece(s)	212638

[8]	SEC cam	RC 3	14
Insertable	100 Piece(s)		№ 443530

[5]	Striker		1
V.01	9	100 Piece(s)	728918
V.02	9	100 Piece(s)	728920

[6]	Cam, insertable	1
Insertable	100 Piece(s)	№ 334671

Designed as Tilt-Only hardware, handle at the side

[70]	Locking sleeve			1
Locking sleeve	Blocks the movement of the espagnolette (90°)	1	100 Piece(s)	№ 738549

Espagnolette and connector

[*]	SEC espagnolette protection set Large packages Alternatively:	1
[8a]	SEC flush-encased gearbox set	1 → *from page 180*
SEC espagnolette protection set	10 Piece(s)	№ 728952

Contents:

[*]		#
[14]	SEC espagnolette protection	1
[16]	SEC connector	2
[30]	Countersunk screw M5 x 10	2

[9]	Cylinder screw M5 x 12		2
Cylinder screw	M5x12	100 Piece(s)	№ 728925

[10]	Espagnolette support			1
Espagnolette support	For Roto Line AL geared-handle	13.5	100 Piece(s)	№ 331937

[11]	Roto Line window handle – geared-handle, lockable Alternatively:	1 → CTL_1
[a]	Roto Line window handle, lockable	1 → CTL_1
	Countersunk screw M5 x 30	2

Height-dependent components

[5]	Striker		
V.01	9	100 Piece(s)	№ 728918
V.02	9	100 Piece(s)	728920

≤ 1300	–
1301 – 1800	2
1801 – 2400	4
> 2400	6

[6]	Cam, insertable	
Insertable	100 Piece(s)	№ 334671

≤ 1300	–
1301 – 1800	2
1801 – 2400	4
> 2400	6

Width-dependent components

[*]	TF additional stay arm set | 150 kg[11]; SW > 1300 mm		
V.01	160	10 Piece(s)	№ 728978
V.02	160	10 Piece(s)	728979

Contents:

[*]		#
[60]	Additional scissor stay arm, compl. V.01 / V.02	1
[61]	Retaining spring, compl.	1
[62]	Coupling rod	1
[63]	Scissor stay guide, compl. TF	1
[64]	Additional stay arm stop, compl. TF	1
[65]	Coupler component, compl.	1

≤ 1300	–
> 1300	1

[5]	Striker		
V.01	9	100 Piece(s)	№ 728918

[11] Installation of the mishandling device on the corner drive / flush-encased gearbox is prescribed in accordance with DIN 18360 (German construction contract procedures (VOB)).

V.02	9	100 Piece(s)	728920

≤ 1300	–
> 1300	2

[6] Cam, insertable

Insertable	100 Piece(s)	334671

≤ 1300	–
> 1300	2

[7] SEC striker

V.01	9	100 Piece(s)	212637
V.02	9	100 Piece(s)	212638

≤ 1200	–
> 1200	1

[8] SEC cam RC 3

Insertable	100 Piece(s)	443530

≤ 1200	–
> 1200	1

[*] Turn restrictor set, with stop 1

Alternatively:

Turn restrictor set, braked, damped 1 → *from page 182*

Clampable	V.01	10 pieces	740814
	V.02	10 pieces	740835

Contents:

[*]		
[41]	Rotating arm, compl.	1
[42]	Stop	1
[43]	Bearing, compl.	1

≤ 1200	–
> 1200	1

Weight-dependent components

[*] Load transfer set; S.kg > 100 kg 1

V.01	Left	10 Piece(s)	739694
	Right	10 Piece(s)	739693
V.02	Left	10 Piece(s)	739696
	Right	10 Piece(s)	739695

Contents:

[*]		#
[28]	Support rod	1
[31]	Frame bearing V.01 / V.02	1
[32]	Sash component	1

4.3 Turn-Only hardware

4.3.1 T-O rebate sash stay, couplable | 80 kg

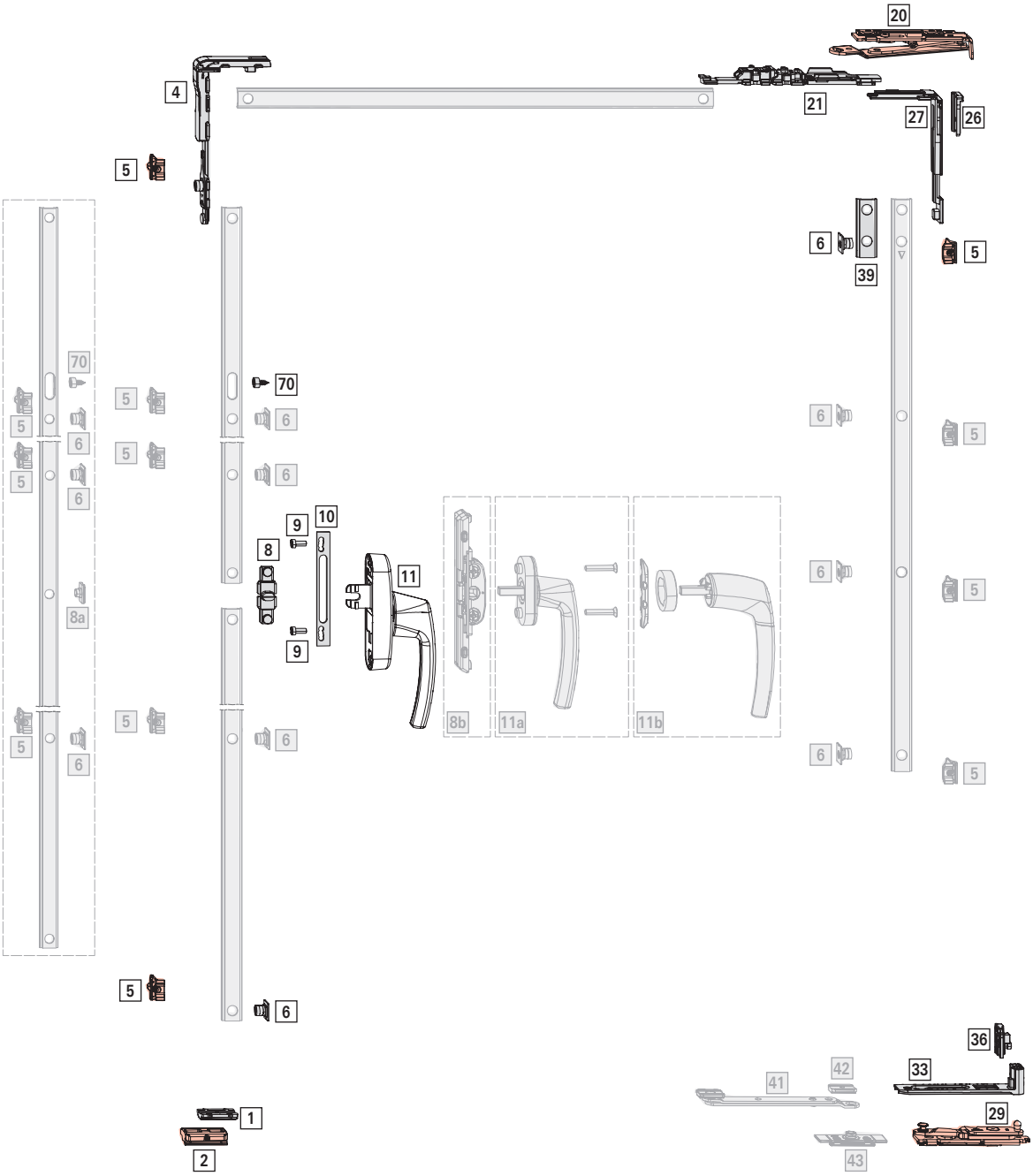

Application range

SW: 300 - 900 mm

SH: 520 - 3000 mm

S.kg: max. 80 kg

INFO
Only use bearings / clamp strips which have been approved for the profile. Information can be obtained from Roto sales representatives.

Basic set

[*] T-O locking components set; for rebate sash stay, couplable — 1

		№
V.01	10 Piece(s)	740848
V.02	10 Piece(s)	740849

Contents:

[*]		#
[1]	Run-up block	1
[2]	Tilt striker	1
[4]	Corner drive without blocking device, with retaining fork	1
[5]	Striker V.01 / V.02	2
[6]	Cam, insertable	1

[*] Rebate sash stay set; couplable — 1

			№
No. 1	Left	10 Piece(s)	740843
	Right	10 Piece(s)	740840
No. 3	Left	10 Piece(s)	740844
	Right	10 Piece(s)	740841
No. 4	Left	10 Piece(s)	740845
	Right	10 Piece(s)	740842

Contents:

[*]		#
[20]	Rebate sash stay, couplable, with clamp strip	1
[21]	Rebate stay hinge, couplable	2
[29]	Pivot rest	1
[33]	Corner hinge	1
[36]	Adjustment piece	1

[*] CL corner drive set — 1
Large packages

		№
V.01	20 Piece(s)	728842
V.02	20 Piece(s)	728843

Contents:

[*]		#
[5]	Striker V.01 / V.02	2
[6]	Cam, insertable	2
[26]	Retaining fork	1
[27]	CL corner drive	1

[70] Locking sleeve — 1

				№
Locking sleeve	Blocks the movement of the espagnolette (90°)	1	100 Piece(s)	738549

[39] Connecting rod, fixed, vertical (CR4) — 1
→ *from page 175*

Espagnolette and connector

[*] T connector set — 1
Alternatively:
[8a] Connector bolt, insertable — 1 → *from page 172*
[8b] Flush-encased gearbox — 1 → *from page 173*

		№
AL T connector set	10 Piece(s)	728981

Contents:

[*]		
[8]	T connector	1
[9]	Cylinder screw M5 x 12	2

[10] Espagnolette support — 1

				№
Espagnolette support	For Roto Line AL geared-handle	13.5	100 Piece(s)	331937

[11] Roto Line window handle – geared-handle — 1
→ CTL_1

Alternatively:
[a] Roto Line window handle – standard — 1 → CTL_1
Countersunk screw M5 x 30 — 2
[b] Roto Line window handle – handle without escutcheon — 1 → CTL_1
Ring for handle without escutcheon — 1
Mounting plate — 1

Height-dependent components

[5] Striker

			№
V.01	9	100 Piece(s)	728918

V.02	9	100 Piece(s)	728920

≤ 1300	–
1301 – 1800	1
1801 – 2400	3
> 2400	5

[6] Cam, insertable

Insertable	100 Piece(s)	334671

≤ 1300	–
1301 – 1800	1
1801 – 2400	3
> 2400	5

Optional

[*] Turn restrictor set, with stop 1

Alternatively:

Turn restrictor set, braked, damped 1 → *from page 182*

Clampable	V.01	10 pieces	740814
	V.02	10 pieces	740835

Contents:

[*]		
[41]	Rotating arm, compl.	1
[42]	Stop	1
[43]	Bearing, compl.	1

4.3.2 T-O rebate sash stay, couplable | RC 2 | 80 kg

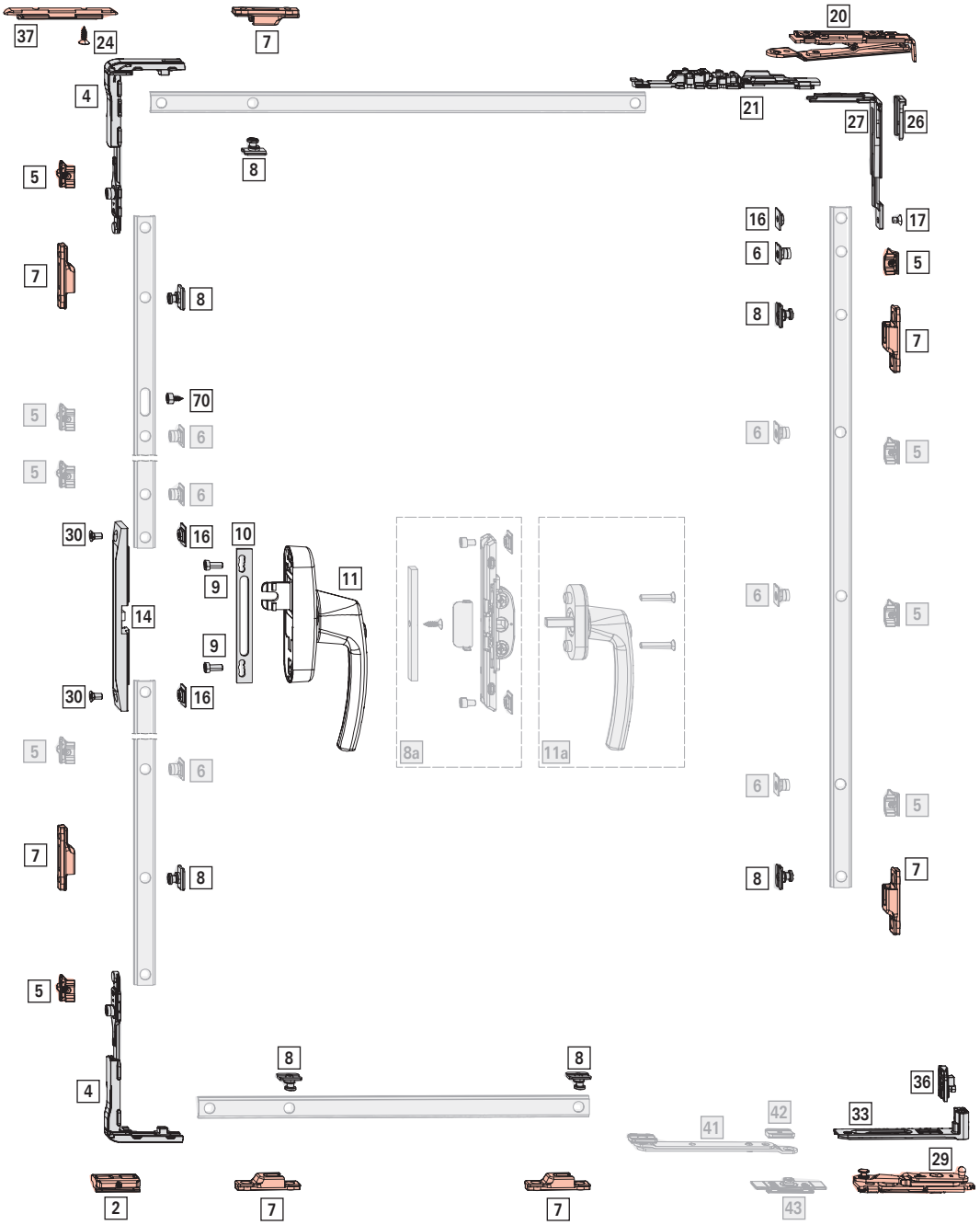

Application range

SW: 370 - 900 mm

SH: 720 - 3000 mm

S.kg: max. 80 kg

INFO
Only use bearings / clamp strips which have been approved for the profile. Information can be obtained from Roto sales representatives.

Basic set

[*] T-O locking components set; for rebate sash stay, couplable — 1

		№
V.01	10 Piece(s)	740848
V.02	10 Piece(s)	740849

Contents:

[*]		#
[1]	Run-up block	1
[2]	Tilt striker	1
[4]	Corner drive without blocking device, with retaining fork	1
[5]	Striker V.01 / V.02	2
[6]	Cam, insertable	1

[*] Rebate sash stay set; couplable — 1

			№
No. 1	Left	10 Piece(s)	740843
	Right	10 Piece(s)	740840
No. 3	Left	10 Piece(s)	740844
	Right	10 Piece(s)	740841
No. 4	Left	10 Piece(s)	740845
	Right	10 Piece(s)	740842

Contents:

[*]		#
[20]	Rebate sash stay, couplable, with clamp strip	1
[21]	Rebate stay hinge, couplable	2
[29]	Pivot rest	1
[33]	Corner hinge	1
[36]	Adjustment piece	1

[*] CL SEC corner drive set — 1
Large packages

		№
SEC corner drive CL set with retaining fork	10 Piece(s)	728944

Contents:

[*]		#
[16]	SEC connector	1
[17]	Countersunk screw M5 x 7	1
[26]	SEC retaining fork	1
[27]	CL SEC corner drive	1

[*] SEC rebate-clearance reduction set — 1
Large packages → *from page 176*

			№
SEC rebate-clearance reduction set	For corner drives	10 Piece(s)	728950

[*]		#
[24]	Countersunk screw ST4.8 x 16	1
[37]	SEC rebate-clearance reduction CD	1

[7] SEC striker — 6

			№
V.01	9	100 Piece(s)	212637
V.02	9	100 Piece(s)	212638

[8] SEC cam RC 2 — 6

		№
Insertable	100 Piece(s)	447245

[5] Striker — 1

			№
V.01	9	100 Piece(s)	728918
V.02	9	100 Piece(s)	728920

[6] Cam, insertable — 1

		№
Insertable	100 Piece(s)	334671

[4] Corner drive without blocking device, with retaining fork — 1

		№
Corner drive without blocking device, with retaining fork	50 Piece(s)	728844

[70] Locking sleeve — 1

				№
Locking sleeve	Blocks the movement of the espagnolette (90°)	1	100 Piece(s)	738549

Espagnolette and connector

[*] SEC espagnolette protection set — 1
Large packages
Alternatively:

[8a]	SEC flush-encased gearbox set	1	→ *from page 180*
			№
SEC espagnolette protection set		10 Piece(s)	728952

Contents:

[*]		#
[14]	SEC espagnolette protection	1
[16]	SEC connector	2
[30]	Countersunk screw M5 x 10	2

[9]	Cylinder screw M5 x 12	2
Cylinder screw	M5x12	100 Piece(s)	№ 728925

[10]	Espagnolette support	1
Espagnolette support	For Roto Line AL geared-handle	13.5	100 Piece(s)	№ 331937

[11]	**Roto Line window handle – geared-handle**, lockable	1 → CTL_1
	Alternatively:	
[a]	Roto Line window handle, lockable	1 → CTL_1
	Countersunk screw M5 x 30	2

Height-dependent components

[5]	Striker		
			№
V.01	9	100 Piece(s)	728918
V.02	9	100 Piece(s)	728920

≤ 1300	–
1301 – 1800	2
1801 – 2400	4
> 2400	6

[6]	Cam, insertable	
Insertable	100 Piece(s)	№ 334671

≤ 1300	–
1301 – 1800	2
1801 – 2400	4
> 2400	6

Width-dependent components

[7]	SEC striker		
			№
V.01	9	100 Piece(s)	212637
V.02	9	100 Piece(s)	212638

≤ 500	–
> 500	1

[8]	SEC cam	RC 2
Insertable	100 Piece(s)	№ 447245

≤ 500	–
> 500	1

Optional

[*]	**Turn restrictor set, with stop**	1
	Alternatively:	
	Turn restrictor set, braked, damped	1 → *from page 182*

			№
Clampable	V.01	10 pieces	740814
	V.02	10 pieces	740835

Contents:

[*]		
[41]	Rotating arm, compl.	1
[42]	Stop	1
[43]	Bearing, compl.	1

4.3.3 T-O rebate sash stay, couplable | RC 3 | 80 kg

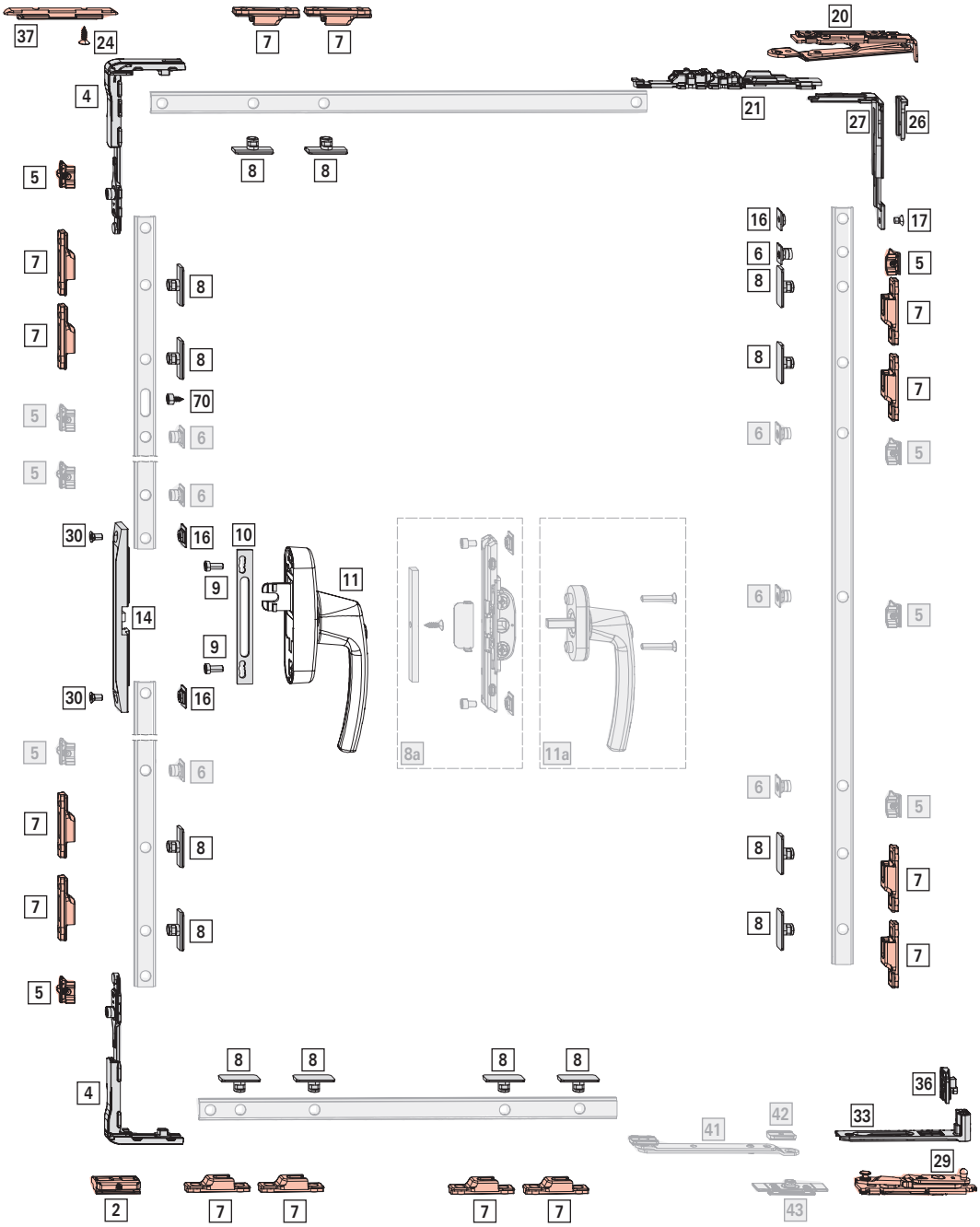

Application range

SW: 485 - 900 mm

SH: 870 - 3000 mm

S.kg: max. 80 kg

INFO
Only use bearings / clamp strips which have been approved for the profile. Information can be obtained from Roto sales representatives.

Basic set

[*] T-O locking components set; for rebate sash stay, couplable — 1

		№
V.01	10 Piece(s)	740848
V.02	10 Piece(s)	740849

Contents:

[*]		#
[1]	Run-up block	1
[2]	Tilt striker	1
[4]	Corner drive without blocking device, with retaining fork	1
[5]	Striker V.01 / V.02	2
[6]	Cam, insertable	1

[*] Rebate sash stay set; couplable — 1

			№
No. 1	Left	10 Piece(s)	740843
	Right	10 Piece(s)	740840
No. 3	Left	10 Piece(s)	740844
	Right	10 Piece(s)	740841
No. 4	Left	10 Piece(s)	740845
	Right	10 Piece(s)	740842

Contents:

[*]		#
[20]	Rebate sash stay, couplable, with clamp strip	1
[21]	Rebate stay hinge, couplable	2
[29]	Pivot rest	1
[33]	Corner hinge	1
[36]	Adjustment piece	1

[*] CL SEC corner drive set — 1
Large packages

		№
SEC corner drive CL set with retaining fork	10 Piece(s)	728944

Contents:

[*]		#
[16]	SEC connector	1
[17]	Countersunk screw M5 x 7	1
[26]	SEC retaining fork	1
[27]	CL SEC corner drive	1

[*] SEC rebate-clearance reduction set — 1
Large packages → *from page 176*

			№
SEC rebate-clearance reduction set	For corner drives	10 Piece(s)	728950

[*]		#
[24]	Countersunk screw ST4.8 x 16	1
[37]	SEC rebate-clearance reduction CD	1

[7] SEC striker — 12

			№
V.01	9	100 Piece(s)	212637
V.02	9	100 Piece(s)	212638

[8] SEC cam RC 3 — 12

		№
Insertable	100 Piece(s)	443530

[5] Striker — 1

			№
V.01	9	100 Piece(s)	728918
V.02	9	100 Piece(s)	728920

[6] Cam, insertable — 1

		№
Insertable	100 Piece(s)	334671

[4] Corner drive without blocking device, with retaining fork — 1

		№
Corner drive without blocking device, with retaining fork	50 Piece(s)	728844

[70] Locking sleeve — 1

				№
Locking sleeve	Blocks the movement of the espagnolette (90°)	1	100 Piece(s)	738549

Espagnolette and connector

[*] SEC espagnolette protection set — 1

	Large packages		
	Alternatively:		
[8a]	SEC flush-encased gearbox set	1	→ *from page 180*

		№
SEC espagnolette protection set	10 Piece(s)	728952

Contents:

[*]		#
[14]	SEC espagnolette protection	1
[16]	SEC connector	2
[30]	Countersunk screw M5 x 10	2

[9] Cylinder screw M5 x 12 — 2

			№
Cylinder screw	M5x12	100 Piece(s)	728925

[10] Espagnolette support — 1

				№
Espagnolette support	For Roto Line AL geared-handle	13.5	100 Piece(s)	331937

[11] Roto Line window handle – geared-handle, lockable — 1 → CTL_1

Alternatively:

[a]	Roto Line window handle, lockable	1	→ CTL_1
	Countersunk screw M5 x 30	2	

Height-dependent components

[5] Striker

			№
V.01	9	100 Piece(s)	728918
V.02	9	100 Piece(s)	728920

≤ 1300	–
1301 – 1800	2
1801 – 2400	4
> 2400	6

[6] Cam, insertable

		№
Insertable	100 Piece(s)	334671

≤ 1300	–
1301 – 1800	2
1801 – 2400	4
> 2400	6

Width-dependent components

[7] SEC striker

			№
V.01	9	100 Piece(s)	212637
V.02	9	100 Piece(s)	212638

≤ 500	–
> 500	2

[8] SEC cam — RC 3

		№
Insertable	100 Piece(s)	443530

≤ 500	–
> 500	2

Optional

[*] Turn restrictor set, with stop — 1

Alternatively:

Turn restrictor set, braked, damped	1	→ *from page 182*	

			№
Clampable	V.01	10 pieces	740814
	V.02	10 pieces	740835

Contents:

[*]		
[41]	Rotating arm, compl.	1
[42]	Stop	1
[43]	Bearing, compl.	1

4.3.4 T-O | 150 kg

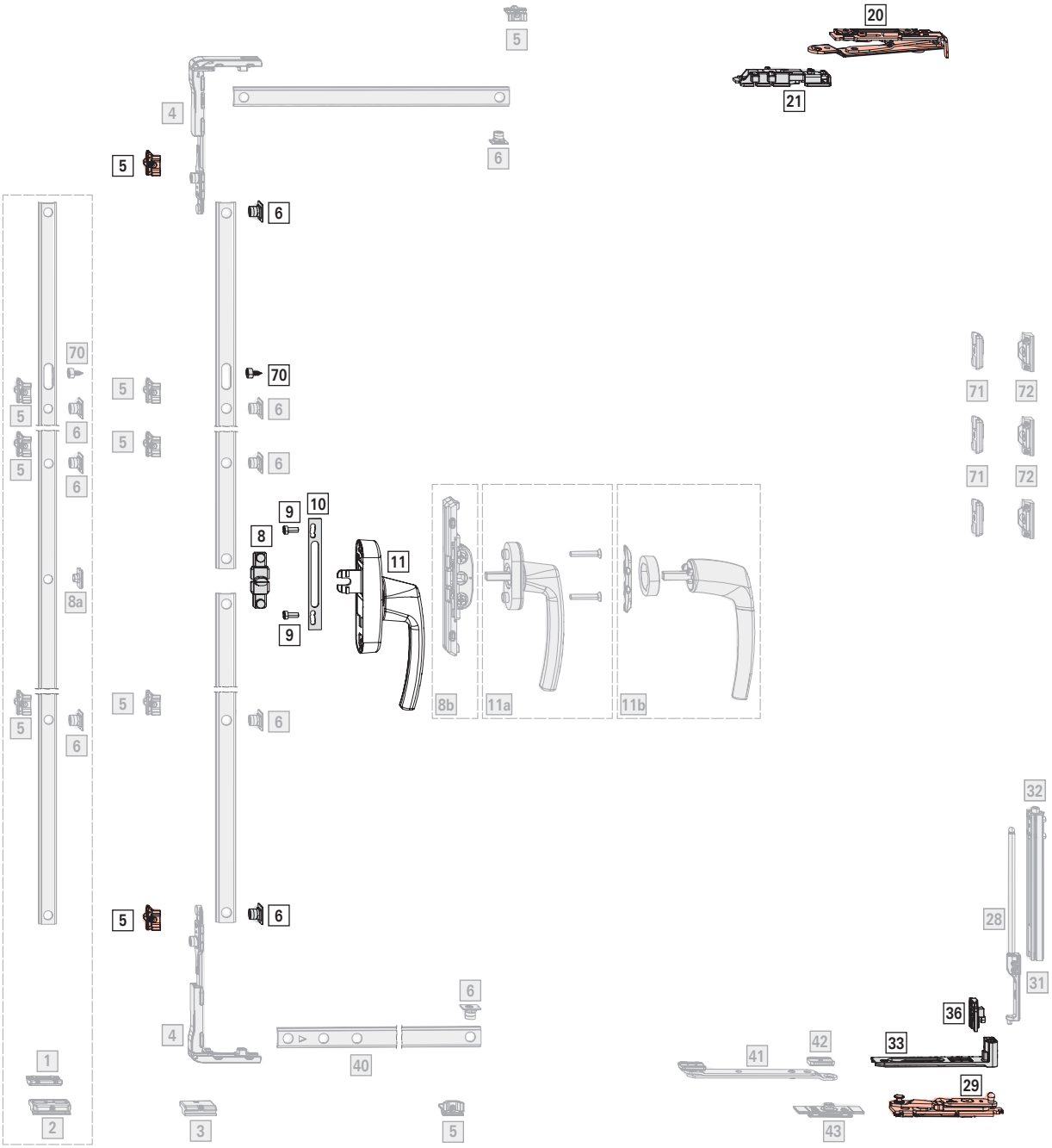
20
21
5
4
6
70
71
72
9
10
8
11
8a
8b
11a
11b
32
28
31
36
33
29
42
41
43
40
1
2
3

Application range

SW: 250 - 1600 mm

SH: 520 - 3000 mm

S.kg: max. 150 kg

INFO
Only use bearings / clamp strips which have been approved for the profile. Information can be obtained from Roto sales representatives.

Basic set

[29] Pivot rest with clamp strip 1

			Nº
No. 1	Left	10 Piece(s)	624970
	Right	10 Piece(s)	624969
No. 3	Left	10 Piece(s)	624972
	Right	10 Piece(s)	624971
No. 4	Left	10 Piece(s)	624974
	Right	10 Piece(s)	624973

[*] Corner hinge set 1

		Nº
Left	10 Piece(s)	739700
Right	10 Piece(s)	739699

Contents:

[*]		#
[33]	Corner hinge	1
[36]	Adjustment piece	1

[*] T-O locking components set 1

		Nº
V.01	10 Piece(s)	728743
V.02	10 Piece(s)	728744

[*]		
[3]	Run-up wedge V.01 / V.02	1
[4]	Corner drive without blocking device, with retaining fork	2
[5]	Striker V.01 / V.02	4
[6]	Cam, insertable	2

[*] Alternatively: T-O locking components set; SW < 1300 mm 1

		Nº
V.01	10 Piece(s)	728756
V.02	10 Piece(s)	728757

Contents:

[*]		#
[1]	Run-up block	1
[2]	Tilt striker	1
[5]	Striker V.01 / V.02	2
[6]	Cam, insertable	2

[20] Rebate sash stay with clamp strip 1

			Nº
No. 1	Left	10 Piece(s)	627256
	Right	10 Piece(s)	627255
No. 3	Left	10 Piece(s)	627258
	Right	10 Piece(s)	627257
No. 4	Left	10 Piece(s)	627260
	Right	10 Piece(s)	627259

[21] Rebate stay hinge 1

	Nº
10 Piece(s)	740811

[5] Striker 2

			Nº
V.01	9	100 Piece(s)	728918
V.02	9	100 Piece(s)	728920

[6] Cam, insertable 2

		Nº
Insertable	100 Piece(s)	334671

[70] Locking sleeve 1

				Nº
Locking sleeve	Blocks the movement of the espagnolette (90°)	1	100 Piece(s)	738549

Espagnolette and connector

[*] T connector set 1

Alternatively:

[8a]	Connector bolt, insertable	1	→ *from page 172*
[8b]	Flush-encased gearbox	1	→ *from page 173*

		Nº
AL T connector set	10 Piece(s)	728981

Contents:

[*]		
[8]	T connector	1
[9]	Cylinder screw M5 x 12	2

[10] Espagnolette support				1
				№
Espagnolette support	For Roto Line AL geared-handle	13.5	100 Piece(s)	331937

[11]	Roto Line window handle – geared-handle	1 → CTL_1
	Alternatively:	
[a]	Roto Line window handle – standard	1 → CTL_1
	Countersunk screw M5 x 30	2
[b]	Roto Line window handle – handle without escutcheon	1 → CTL_1
	Ring for handle without escutcheon	1
	Mounting plate	1

Height-dependent components

[5] Striker			
			№
V.01	9	100 Piece(s)	728918
V.02	9	100 Piece(s)	728920

≤ 1300	–
1301 – 1800	1
1801 – 2400	2
> 2400	3

[6] Cam, insertable		
		№
Insertable	100 Piece(s)	334671

≤ 1300	–
1301 – 1800	1
1801 – 2400	2
> 2400	3

[*] CL set		
		№
V.01	10 Piece(s)	740813
V.02	10 Piece(s)	740812

Contents:

[*]		#
[71]	CL sash component	1
[72]	CL frame component V.01 / V.02	1

≤ 1300	–
1301 – 1800	1
1801 – 2400	2
> 2400	3

Width-dependent components

[*] Turn restrictor set, with stop			1
Alternatively:			
Turn restrictor set, braked, damped			1 → *from page 182*
			№
Clampable	V.01	10 pieces	740814
	V.02	10 pieces	740835

Contents:

[*]		
[41]	Rotating arm, compl.	1
[42]	Stop	1
[43]	Bearing, compl.	1

≤ 1200	–
> 1200	1

[40] Connecting rod, fixed, horizontal, bottom (CR5)
→ *from page 175*

Weight-dependent components

[*] Load transfer set; S.kg > 80 kg			1
			№
V.01	Left	10 Piece(s)	739694
	Right	10 Piece(s)	739693
V.02	Left	10 Piece(s)	739696
	Right	10 Piece(s)	739695

Contents:

[*]		#
[28]	Support rod	1
[31]	Frame bearing V.01 / V.02	1
[32]	Sash component	1

4.3.5 T-O | RC 2 | 150 kg

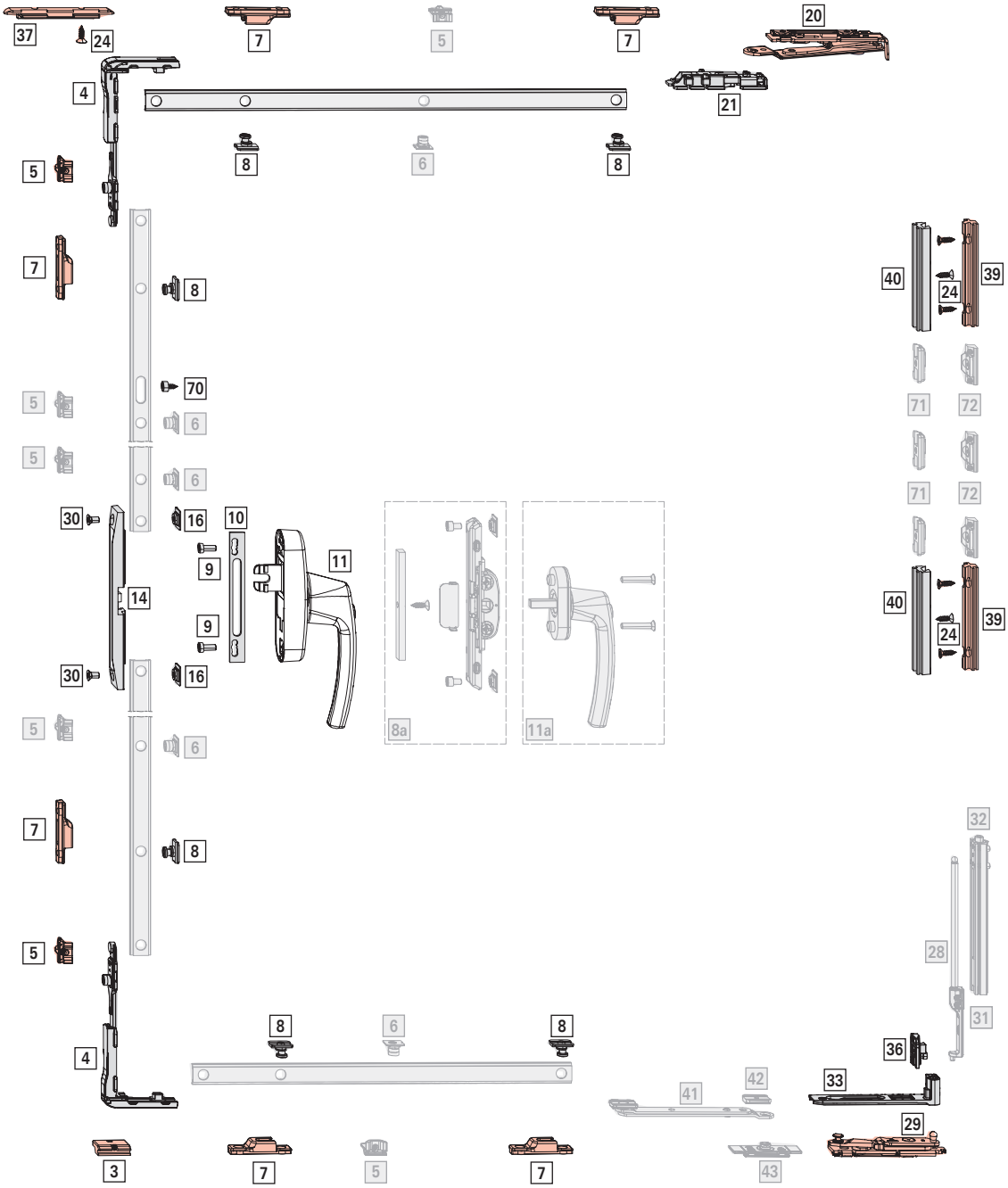

Application range

SW: 530 - 1600 mm

SH: 720 - 3000 mm

S.kg: max. 150 kg

INFO
Only use bearings / clamp strips which have been approved for the profile. Information can be obtained from Roto sales representatives.

Basic set

[29] Pivot rest with clamp strip 1

			Nº
No. 1	Left	10 Piece(s)	624970
	Right	10 Piece(s)	624969
No. 3	Left	10 Piece(s)	624972
	Right	10 Piece(s)	624971
No. 4	Left	10 Piece(s)	624974
	Right	10 Piece(s)	624973

[*] Corner hinge set 1

		Nº
Left	10 Piece(s)	739700
Right	10 Piece(s)	739699

Contents:

[*]		#
[33]	Corner hinge	1
[36]	Adjustment piece	1

[*] T-O locking components set 1

		Nº
V.01	10 Piece(s)	728743
V.02	10 Piece(s)	728744

[*]		
[3]	Run-up wedge V.01 / V.02	1
[4]	Corner drive without blocking device, with retaining fork	2
[5]	Striker V.01 / V.02	4
[6]	Cam, insertable	2

[20] Rebate sash stay with clamp strip 1

			Nº
No. 1	Left	10 Piece(s)	627256
	Right	10 Piece(s)	627255
No. 3	Left	10 Piece(s)	627258
	Right	10 Piece(s)	627257
No. 4	Left	10 Piece(s)	627260
	Right	10 Piece(s)	627259

[21] Rebate stay hinge 1

	Nº
10 Piece(s)	740811

[*] SEC hinge lock set 2

		Nº
V.01	10 Piece(s)	728940
V.02	10 Piece(s)	728941

Contents:

[*]		#
[24]	Countersunk screw ST4.8 x 16	3
[39]	Frame component V.01 / V.02	1
[40]	Sash component	1

[*] SEC rebate-clearance reduction set 1
Large packages → *from page 176*

			Nº
SEC rebate-clearance reduction set	For corner drives	10 Piece(s)	728950

[*]		#
[24]	Countersunk screw ST4.8 x 16	1
[37]	SEC rebate-clearance reduction CD	1

[7] SEC striker 6

			Nº
V.01	9	100 Piece(s)	212637
V.02	9	100 Piece(s)	212638

[8] SEC cam RC 2 6

		Nº
Insertable	100 Piece(s)	447245

[70] Locking sleeve 1

				Nº
Locking sleeve	Blocks the movement of the espagnolette (90°)	1	100 Piece(s)	738549

Espagnolette and connector

[*] SEC espagnolette protection set 1
Large packages
Alternatively:
[8a] SEC flush-encased gearbox set 1 → *from page 180*

		Nº
SEC espagnolette protection set	10 Piece(s)	728952

Contents:

[*]		#
[14]	SEC espagnolette protection	1
[16]	SEC connector	2
[30]	Countersunk screw M5 x 10	2

[9] Cylinder screw M5 x 12 2

			№
Cylinder screw	M5x12	100 Piece(s)	728925

[10] Espagnolette support 1

				№
Espagnolette support	For Roto Line AL geared-handle	13.5	100 Piece(s)	331937

[11] Roto Line window handle – geared-handle, lockable 1 → CTL_1

Alternatively:

[a] Roto Line window handle, lockable 1 → CTL_1

Countersunk screw M5 x 30 2

Height-dependent components

[5] Striker

			№
V.01	9	100 Piece(s)	728918
V.02	9	100 Piece(s)	728920

≤ 1300	–
1301 – 1800	1
1801 – 2400	2
> 2400	3

[6] Cam, insertable

		№
Insertable	100 Piece(s)	334671

≤ 1300	–
1301 – 1800	1
1801 – 2400	2
> 2400	3

[*] CL set

		№
V.01	10 Piece(s)	740813
V.02	10 Piece(s)	740812

Contents:

[*]		#
[71]	CL sash component	1
[72]	CL frame component V.01 / V.02	1

≤ 1300	–
1301 – 1800	1
1801 – 2400	2
> 2400	3

Width-dependent components

[5] Striker

			№
V.01	9	100 Piece(s)	728918
V.02	9	100 Piece(s)	728920

≤ 1300	–
> 1300	2

[6] Cam, insertable

		№
Insertable	100 Piece(s)	334671

≤ 1300	–
> 1300	2

[*] Turn restrictor set, with stop 1

Alternatively:

Turn restrictor set, braked, damped 1 → *from page 182*

			№
Clampable	V.01	10 pieces	740814
	V.02	10 pieces	740835

Contents:

[*]		
[41]	Rotating arm, compl.	1
[42]	Stop	1
[43]	Bearing, compl.	1

≤ 1200	–
> 1200	1

Weight-dependent components

[*]	**Load transfer set**; S.kg > 80 kg		1
			№
V.01	Left	10 Piece(s)	739694
	Right	10 Piece(s)	739693
V.02	Left	10 Piece(s)	739696
	Right	10 Piece(s)	739695

Contents:

[*]		#
[28]	Support rod	1
[31]	Frame bearing V.01 / V.02	1
[32]	Sash component	1

4.3.6 T-O | RC 3 | 150 kg

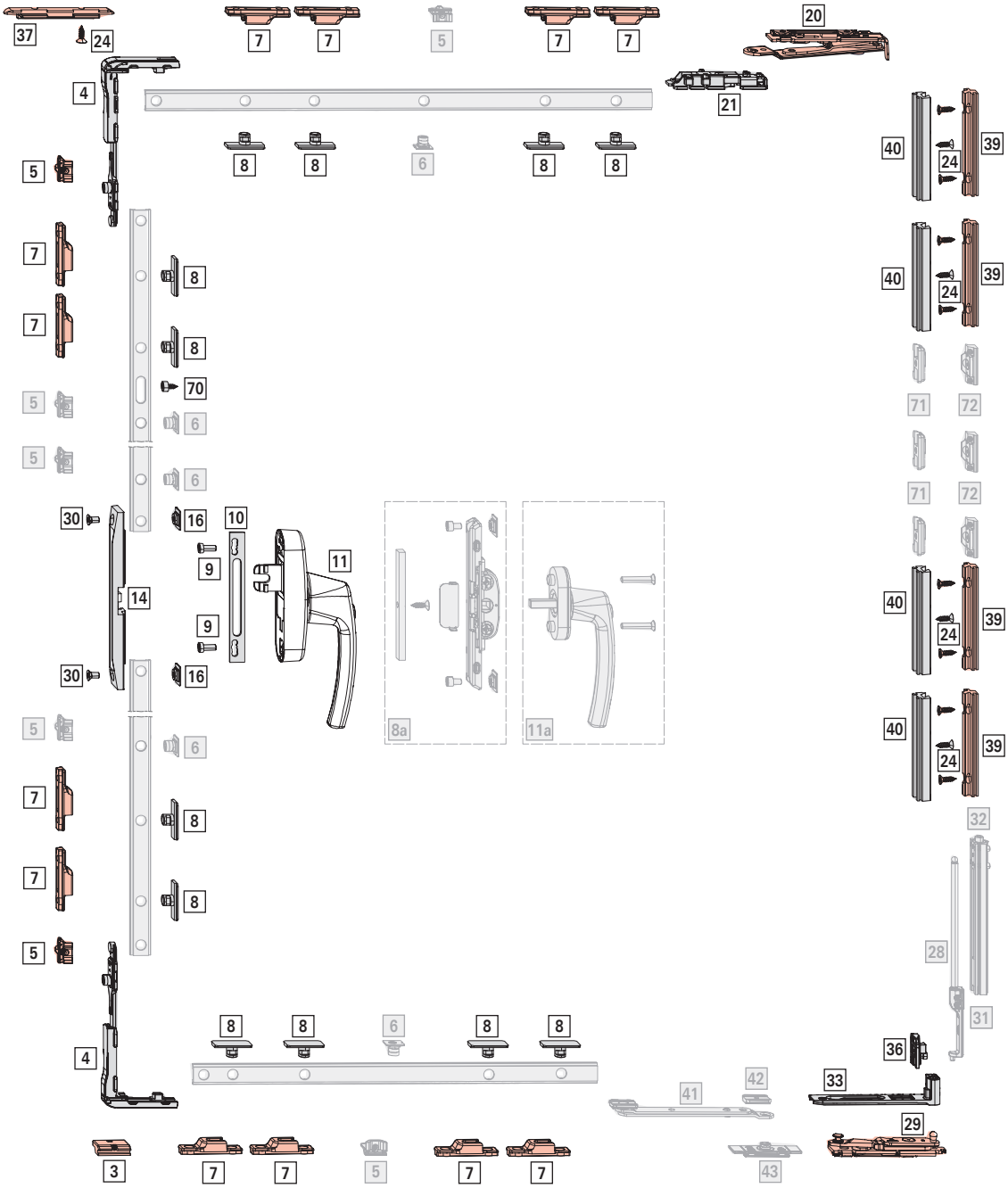

Application range

SW: 680 - 1600 mm

SH: 1050 - 3000 mm

S.kg: max. 150 kg

INFO
Only use bearings / clamp strips which have been approved for the profile. Information can be obtained from Roto sales representatives.

Basic set

[29] Pivot rest with clamp strip 1

			№
No. 1	Left	10 Piece(s)	624970
	Right	10 Piece(s)	624969
No. 3	Left	10 Piece(s)	624972
	Right	10 Piece(s)	624971
No. 4	Left	10 Piece(s)	624974
	Right	10 Piece(s)	624973

[*] Corner hinge set 1

		№
Left	10 Piece(s)	739700
Right	10 Piece(s)	739699

Contents:

[*]		#
[33]	Corner hinge	1
[36]	Adjustment piece	1

[*] T-O locking components set 1

		№
V.01	10 Piece(s)	728743
V.02	10 Piece(s)	728744

[*]		
[3]	Run-up wedge V.01 / V.02	1
[4]	Corner drive without blocking device, with retaining fork	2
[5]	Striker V.01 / V.02	4
[6]	Cam, insertable	2

[20] Rebate sash stay with clamp strip 1

			№
No. 1	Left	10 Piece(s)	627256
	Right	10 Piece(s)	627255
No. 3	Left	10 Piece(s)	627258
	Right	10 Piece(s)	627257
No. 4	Left	10 Piece(s)	627260
	Right	10 Piece(s)	627259

[21] Rebate stay hinge 1

	№
10 Piece(s)	740811

[*] SEC hinge lock set 4

		№
V.01	10 Piece(s)	728940
V.02	10 Piece(s)	728941

Contents:

[*]		#
[24]	Countersunk screw ST4.8 x 16	3
[39]	Frame component V.01 / V.02	1
[40]	Sash component	1

[*] SEC rebate-clearance reduction set 1
Large packages → *from page 176*

			№
SEC rebate-clearance reduction set	For corner drives	10 Piece(s)	728950

[*]		#
[24]	Countersunk screw ST4.8 x 16	1
[37]	SEC rebate-clearance reduction CD	1

[7] SEC striker 12

			№
V.01	9	100 Piece(s)	212637
V.02	9	100 Piece(s)	212638

[8] SEC cam RC 3 12

		№
Insertable	100 Piece(s)	443530

[70] Locking sleeve 1

				№
Locking sleeve	Blocks the movement of the espagnolette (90°)	1	100 Piece(s)	738549

Espagnolette and connector

[*] SEC espagnolette protection set 1
Large packages
Alternatively:
[8a] SEC flush-encased gearbox set 1 → *from page 180*

		№
SEC espagnolette protection set	10 Piece(s)	728952

Contents:

[*]		#
[14]	SEC espagnolette protection	1
[16]	SEC connector	2
[30]	Countersunk screw M5 x 10	2

[9] Cylinder screw M5 x 12 2

			№
Cylinder screw	M5x12	100 Piece(s)	728925

[10] Espagnolette support 1

				№
Espagnolette support	For Roto Line AL geared-handle	13.5	100 Piece(s)	331937

[11] Roto Line window handle – geared-handle, lockable 1 → CTL_1

Alternatively:

[a] Roto Line window handle, lockable 1 → CTL_1

Countersunk screw M5 x 30 2

Height-dependent components

[5] Striker

			№
V.01	9	100 Piece(s)	728918
V.02	9	100 Piece(s)	728920

≤ 1300	–
1301 – 1800	1
1801 – 2400	2
> 2400	3

[6] Cam, insertable

		№
Insertable	100 Piece(s)	334671

≤ 1300	–
1301 – 1800	1
1801 – 2400	2
> 2400	3

[*] CL set

		№
V.01	10 Piece(s)	740813
V.02	10 Piece(s)	740812

Contents:

[*]		#
[71]	CL sash component	1
[72]	CL frame component V.01 / V.02	1

≤ 1300	–
1301 – 1800	1
1801 – 2400	2
> 2400	3

Width-dependent components

[5] Striker

			№
V.01	9	100 Piece(s)	728918
V.02	9	100 Piece(s)	728920

≤ 1300	–
> 1300	2

[6] Cam, insertable

		№
Insertable	100 Piece(s)	334671

≤ 1300	–
> 1300	2

[*] Turn restrictor set, with stop 1

Alternatively:

Turn restrictor set, braked, damped 1 → *from page 182*

			№
Clampable	V.01	10 pieces	740814
	V.02	10 pieces	740835

Contents:

[*]		
[41]	Rotating arm, compl.	1
[42]	Stop	1
[43]	Bearing, compl.	1

≤ 1200	–
> 1200	1

Weight-dependent components

[*]	**Load transfer set**; S.kg > 80 kg		1
			№
V.01	Left	10 Piece(s)	739694
	Right	10 Piece(s)	739693
V.02	Left	10 Piece(s)	739696
	Right	10 Piece(s)	739695

Contents:

[*]		#
[28]	Support rod	1
[31]	Frame bearing V.01 / V.02	1
[32]	Sash component	1

4.3.7 T-O | 180 kg

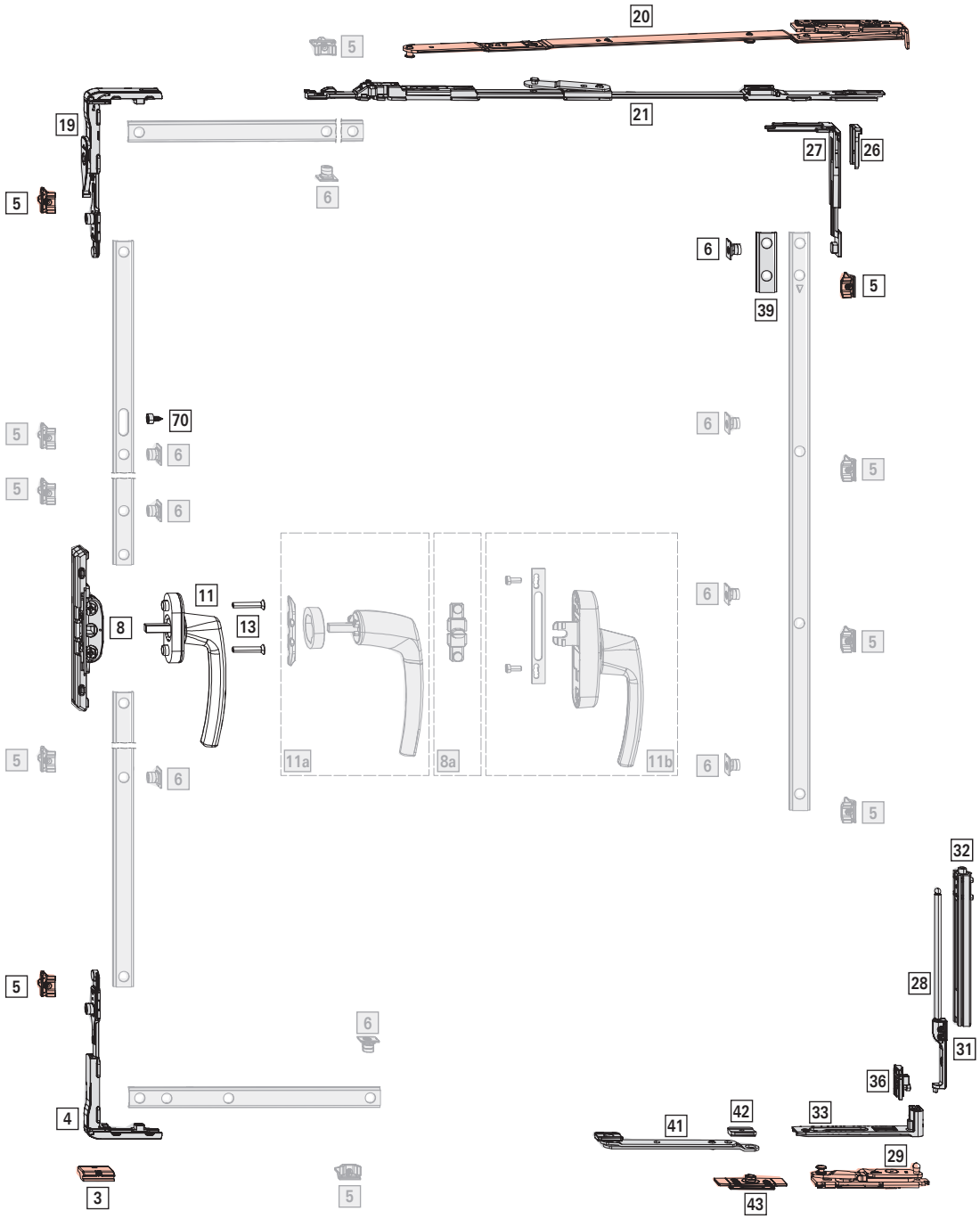
20
5
21
19
27
26
5
6
6
39
5
70
5
6
5
6
5
11
13
8
11a
8a
11b
6
5
5
6
6
5
32
5
28
6
31
36
4
42
41
33
29
3
5
43

Application range

SW: 735 - 1600 mm

SH: 1000 - 3000 mm

S.kg: max. 180 kg

DANGER

Risk of death due to insufficient profile stability!

Insufficient profile stability may cause the sash to fall and cause serious or fatal accidents.

1. The hardware configuration must be checked separately.

   For S.kg 150 - 180 kg, only profiles with a profile assessment that has been approved by Roto are permissible.

INFO

Only use bearings / clamp strips which have been approved for the profile. Information can be obtained from Roto sales representatives.

Basic set

[29] Pivot rest 180 kg with clamp strip — 1

			№
No. 1	Left	10 Piece(s)	641328
	Right	10 Piece(s)	641327
No. 3	Left	10 Piece(s)	641326
	Right	10 Piece(s)	641325
No. 4	Left	10 Piece(s)	641330
	Right	10 Piece(s)	641329

[*] Corner hinge set 180 kg — 1

		№
Left	10 Piece(s)	641334
Right	10 Piece(s)	641297

Contents:

[*]		#
[33]	Corner hinge	1
[36]	Adjustment piece	1

[3] Run-up wedge — 1

			№
Run-up wedge	V.01	100 Piece(s)	684282
	V.02	100 Piece(s)	684283

[4] Corner drive without blocking device, with retaining fork — 1

		№
Corner drive without blocking device, with retaining fork	50 Piece(s)	728844

[5] Striker — 1

			№
V.01	9	100 Piece(s)	728918
V.02	9	100 Piece(s)	728920

[19] Corner drive with blocking device with retaining fork — 1

		№
Corner drive with blocking device and retaining fork	100 Piece(s)	490173

[21] Scissor stay guide — 1

		№
735	10 Piece(s)	740838

[20] Sash stay 180 kg — 1

					№
735	No. 1	150	Left	10 Piece(s)	641318
		150	Right	10 Piece(s)	641317
	No. 3	150	Left	10 Piece(s)	641320
		150	Right	10 Piece(s)	641319
	No. 4	150	Left	10 Piece(s)	641322
		150	Right	10 Piece(s)	641321

[*] CL corner drive set — 1

Large packages

		№
V.01	20 Piece(s)	728842
V.02	20 Piece(s)	728843

Contents:

[*]		#
[5]	Striker V.01 / V.02	2
[6]	Cam, insertable	2
[26]	Retaining fork	1
[27]	CL corner drive	1

[*] Turn restrictor set, with stop — 1

Alternatively:

Turn restrictor set, braked, damped — 1 → *from page 182*

			№
Clampable	V.01	10 pieces	740814
	V.02	10 pieces	740835

Contents:

[*]		
[41]	Rotating arm, compl.	1
[42]	Stop	1
[43]	Bearing, compl.	1

[*] Load transfer set 1

			№
V.01	Left	10 Piece(s)	739694
	Right	10 Piece(s)	739693
V.02	Left	10 Piece(s)	739696
	Right	10 Piece(s)	739695

Contents:

[*]		#
[28]	Support rod	1
[31]	Frame bearing V.01 / V.02	1
[32]	Sash component	1

[70] Locking sleeve 1

				№
Locking sleeve	Blocks the movement of the espagnolette (90°)	1	100 Piece(s)	738549

[39] Connecting rod, fixed, vertical (CR4) 1

→ *from page 175*

Espagnolette and connector

[8] Flush-encased gearbox without mishandling device 1

Alternatively:

T connector → *from page 172*

		№
Flush-encased gearbox without blocking device	10 Piece(s)	378338

[11] Roto Line window handle – standard 1 → CTL_1

Alternatively:

[a]	Roto Line window handle – handle without escutcheon	1	→ CTL_1
	Ring for handle without escutcheon	1	
	Mounting plate	1	
[b]	Roto Line window handle – geared-handle	1	→ CTL_1
	Espagnolette support	1	→ *from page 172*
	Cylinder screw M5 x 12	2	→ *from page 178*

[13] Countersunk screw M5 x 30 1

			№
Countersunk screw	M5x30	100 Piece(s)	212501

Height-dependent components

[5] Striker

			№
V.01	9	100 Piece(s)	728918
V.02	9	100 Piece(s)	728920

≤ 1300	–
1301 – 1800	2
1801 – 2400	4
> 2400	6

[6] Cam, insertable

		№
Insertable	100 Piece(s)	334671

≤ 1300	–
1301 – 1800	1
1801 – 2400	3
> 2400	5

Width-dependent components

[5] Striker

			№
V.01	9	100 Piece(s)	728918
V.02	9	100 Piece(s)	728920

≤ 1300	–
> 1300	2

[6] Cam, insertable

		№
Insertable	100 Piece(s)	334671

≤ 1300	–
> 1300	2

[40] Connecting rod, fixed, horizontal, bottom (CR5)

→ *from page 175*

4.3.8 T-O | RC 2 | 180 kg

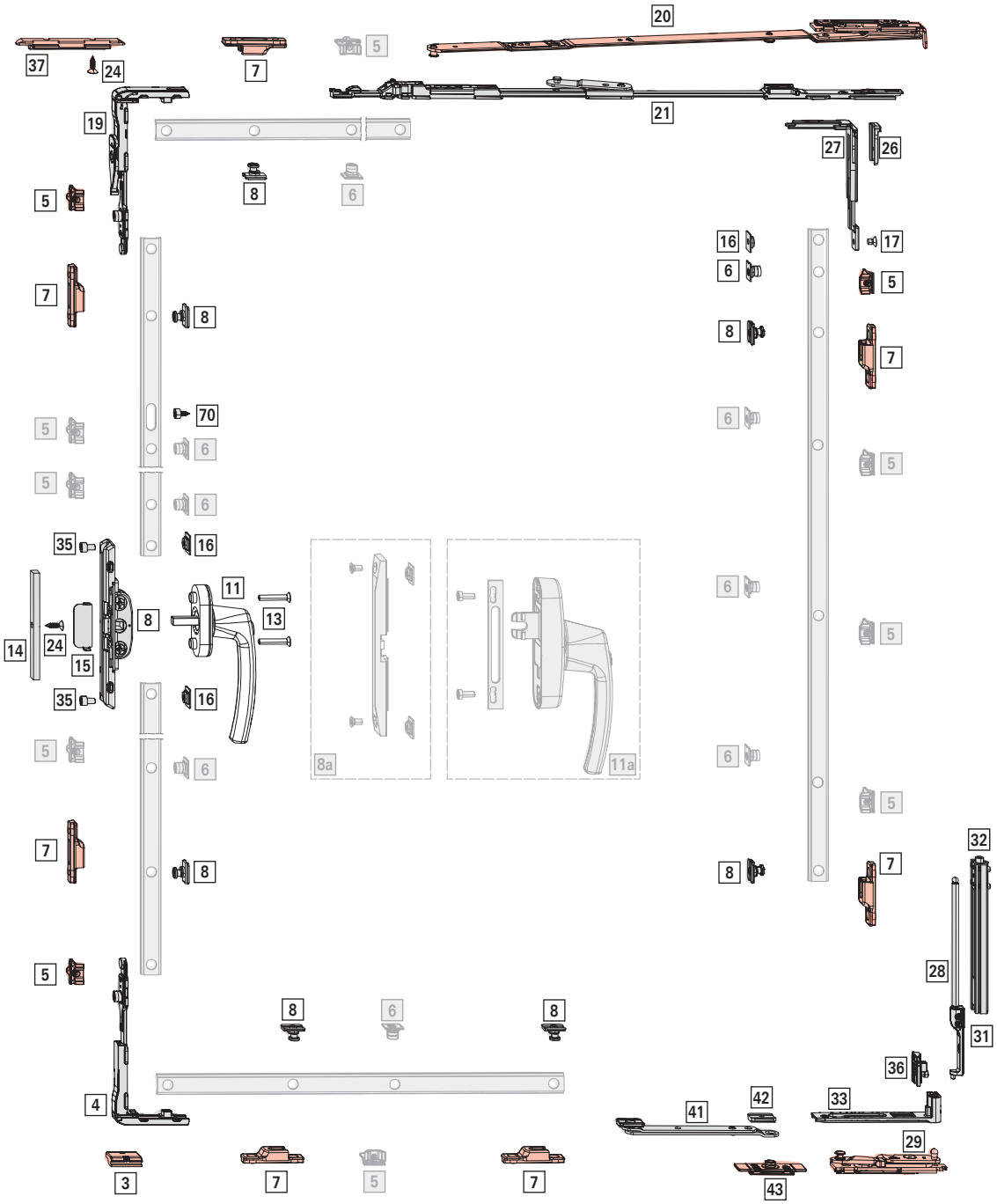

Application range

SW: 800 - 1600 mm

SH: 1000 - 3000 mm

S.kg: max. 180 kg

DANGER

Risk of death due to insufficient profile stability!

Insufficient profile stability may cause the sash to fall and cause serious or fatal accidents.

1. The hardware configuration must be checked separately.

   For S.kg 150 - 180 kg, only profiles with a profile assessment that has been approved by Roto are permissible.

INFO

Only use bearings / clamp strips which have been approved for the profile. Information can be obtained from Roto sales representatives.

Basic set

[29] Pivot rest 180 kg with clamp strip 1

			№
No. 1	Left	10 Piece(s)	641328
	Right	10 Piece(s)	641327
No. 3	Left	10 Piece(s)	641326
	Right	10 Piece(s)	641325
No. 4	Left	10 Piece(s)	641330
	Right	10 Piece(s)	641329

[*] Corner hinge set 180 kg 1

		№
Left	10 Piece(s)	641334
Right	10 Piece(s)	641297

Contents:

[*]		#
[33]	Corner hinge	1
[36]	Adjustment piece	1

[3] Run-up wedge 1

			№
Run-up wedge	V.01	100 Piece(s)	684282
	V.02	100 Piece(s)	684283

[4] Corner drive without blocking device, with retaining fork 1

		№
Corner drive without blocking device, with retaining fork	50 Piece(s)	728844

[5] Striker 3

			№
V.01	9	100 Piece(s)	728918
V.02	9	100 Piece(s)	728920

[6] Cam, insertable 1

		№
Insertable	100 Piece(s)	334671

[19] Corner drive with blocking device with retaining fork 1

		№
Corner drive with blocking device and retaining fork	100 Piece(s)	490173

[21] Scissor stay guide 1

		№
735	10 Piece(s)	740838

[20] Sash stay 180 kg 1

					№
735	No. 1	150	Left	10 Piece(s)	641318
		150	Right	10 Piece(s)	641317
	No. 3	150	Left	10 Piece(s)	641320
		150	Right	10 Piece(s)	641319
	No. 4	150	Left	10 Piece(s)	641322
		150	Right	10 Piece(s)	641321

[*] CL SEC corner drive set 1
Large packages

		№
SEC corner drive CL set with retaining fork	10 Piece(s)	728944

[*]		#
[16]	SEC connector	1
[17]	Countersunk screw M5 x 7	1
[26]	SEC retaining fork	1
[27]	CL SEC corner drive	1

[*] SEC rebate-clearance reduction set 1

Large packages → *from page 176*			
			№
SEC rebate-clearance reduction set	For corner drives	10 Piece(s)	728950

[*]		#
[24]	Countersunk screw ST4.8 x 16	1
[37]	SEC rebate-clearance reduction CD	1

[7]	SEC striker			7
				№
V.01	9	100 Piece(s)		212637
V.02	9	100 Piece(s)		212638

[8]	SEC cam	RC 2	7
			№
Insertable	100 Piece(s)		447245

[*]	Turn restrictor set, with stop			1
	Alternatively:			
	Turn restrictor set, braked, damped	1	→ *from page 182*	
				№
Clampable	V.01	10 pieces		740814
	V.02	10 pieces		740835

Contents:

[*]		
[41]	Rotating arm, compl.	1
[42]	Stop	1
[43]	Bearing, compl.	1

[*]	Load transfer set			1
				№
V.01	Left	10 Piece(s)		739694
	Right	10 Piece(s)		739693
V.02	Left	10 Piece(s)		739696
	Right	10 Piece(s)		739695

Contents:

[*]		#
[28]	Support rod	1
[31]	Frame bearing V.01 / V.02	1
[32]	Sash component	1

[70]	Locking sleeve				1
					№
Locking sleeve	Blocks the movement of the espagnolette (90°)	1	100 Piece(s)		738549

Espagnolette and connector

[*]	SEC flush-encased gearbox set		1
	Large packages		→ *from page 173*
	Alternatively:		
[8a]	SEC espagnolette protection set	1	→ *from page 172*
			№
SEC flush-encased gearbox set		10 Piece(s)	728947

Contents:

[*]		#
[8]	SEC flush-encased gearbox without blocking device	1
[16]	SEC connector	2
[35]	Cylinder screw M5 x 8	2

[14]	SEC rebate-clearance reduction flush-encased gearbox			1
				№
SEC rebate-clearance reduction ESP	For Roto Line lock. handles		50 Piece(s)	334360

[15]	SEC drilling protection			1
				№
SEC drilling protection	For Roto Line lock. handles		10 Piece(s)	487406

[24]	Countersunk screw ST4.8 x 16			1
				№
Countersunk screw	ST4,8x16		100 Piece(s)	728933

[11]	Roto Line window handle, lockable		1
			→ CTL_1
	Alternatively:		
[a]	Roto Line window handle – geared-handle, lockable	1	→ CTL_1
	Espagnolette support	1	→ *from page 172*
	Cylinder screw M5 x 12	2	→ *from page 178*

[13]	Countersunk screw M5 x 30			1
				№
Countersunk screw	M5x30		100 Piece(s)	212501

Height-dependent components

[5]	Striker		
			№
V.01	9	100 Piece(s)	728918

V.02	9	100 Piece(s)	728920

≤ 1300	–
1301 – 1800	2
1801 – 2400	4
> 2400	6

[6] Cam, insertable

Insertable	100 Piece(s)	334671

≤ 1300	–
1301 – 1800	2
1801 – 2400	4
> 2400	6

Width-dependent components

[5] Striker

V.01	9	100 Piece(s)	728918
V.02	9	100 Piece(s)	728920

≤ 1300	–
> 1300	2

[6] Cam, insertable

Insertable	100 Piece(s)	334671

≤ 1300	–
> 1300	2

4.3.9 T-O | RC 3 | 180 kg

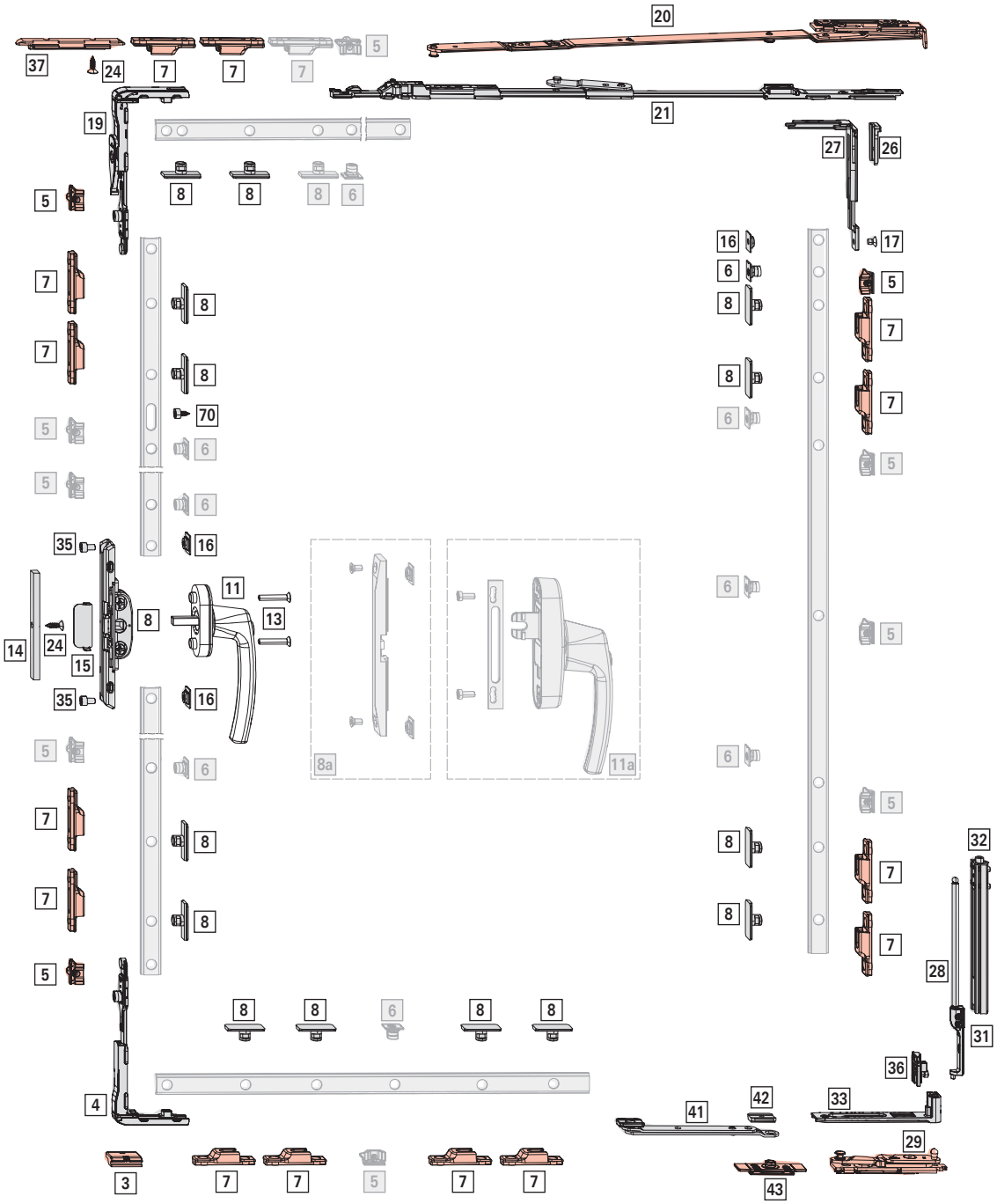

Application range

SW: 915 - 1600 mm

SH: 1000 - 3000 mm

S.kg: max. 180 kg

DANGER

Risk of death due to insufficient profile stability!

Insufficient profile stability may cause the sash to fall and cause serious or fatal accidents.

1. The hardware configuration must be checked separately.

   For S.kg 150 - 180 kg, only profiles with a profile assessment that has been approved by Roto are permissible.

INFO

Only use bearings / clamp strips which have been approved for the profile. Information can be obtained from Roto sales representatives.

Basic set

[29] Pivot rest with clamp strip 1

			№
No. 1	Left	10 Piece(s)	624970
	Right	10 Piece(s)	624969
No. 3	Left	10 Piece(s)	624972
	Right	10 Piece(s)	624971
No. 4	Left	10 Piece(s)	624974
	Right	10 Piece(s)	624973

[*] Corner hinge set 1

		№
Left	10 Piece(s)	739700
Right	10 Piece(s)	739699

Contents:

[*]		#
[33]	Corner hinge	1
[36]	Adjustment piece	1

[3] Run-up wedge 1

			№
Run-up wedge	V.01	100 Piece(s)	684282
	V.02	100 Piece(s)	684283

[4] Corner drive without blocking device, with retaining fork 1

		№
Corner drive without blocking device, with retaining fork	50 Piece(s)	728844

[5] Striker 3

			№
V.01	9	100 Piece(s)	728918
V.02	9	100 Piece(s)	728920

[6] Cam, insertable 1

		№
Insertable	100 Piece(s)	334671

[19] Corner drive with blocking device with retaining fork 1

		№
Corner drive with blocking device and retaining fork	100 Piece(s)	490173

[21] Scissor stay guide 1

		№
735	10 Piece(s)	740838

[20] Sash stay 180 kg 1

					№
735	No. 1	150	Left	10 Piece(s)	641318
		150	Right	10 Piece(s)	641317
	No. 3	150	Left	10 Piece(s)	641320
		150	Right	10 Piece(s)	641319
	No. 4	150	Left	10 Piece(s)	641322
		150	Right	10 Piece(s)	641321

[*] CL SEC corner drive set 1
Large packages

		№
SEC corner drive CL set with retaining fork	10 Piece(s)	728944

[*]		#
[16]	SEC connector	1
[17]	Countersunk screw M5 x 7	1
[26]	SEC retaining fork	1
[27]	CL SEC corner drive	1

[*] SEC rebate-clearance reduction set 1

Large packages → *from page 176*

			№
SEC rebate-clearance reduction set	For corner drives	10 Piece(s)	728950

[*]		#
[24]	Countersunk screw ST4.8 x 16	1
[37]	SEC rebate-clearance reduction CD	1

[7] SEC striker — 14

			№
V.01	9	100 Piece(s)	212637
V.02	9	100 Piece(s)	212638

[8] SEC cam RC 3 — 14

		№
Insertable	100 Piece(s)	443530

[*] Turn restrictor set, with stop — 1

Alternatively:

Turn restrictor set, braked, damped — 1 → *from page 182*

			№
Clampable	V.01	10 pieces	740814
	V.02	10 pieces	740835

Contents:

[*]		
[41]	Rotating arm, compl.	1
[42]	Stop	1
[43]	Bearing, compl.	1

[*] Load transfer set — 1

			№
V.01	Left	10 Piece(s)	739694
	Right	10 Piece(s)	739693
V.02	Left	10 Piece(s)	739696
	Right	10 Piece(s)	739695

Contents:

[*]		#
[28]	Support rod	1
[31]	Frame bearing V.01 / V.02	1
[32]	Sash component	1

[70] Locking sleeve — 1

				№
Locking sleeve	Blocks the movement of the espagnolette (90°)	1	100 Piece(s)	738549

Espagnolette and connector

[*] SEC flush-encased gearbox set — 1

Large packages → *from page 173*

Alternatively:

[8a] SEC espagnolette protection set — 1 → *from page 172*

		№
SEC flush-encased gearbox set	10 Piece(s)	728947

Contents:

[*]		#
[8]	SEC flush-encased gearbox without blocking device	1
[16]	SEC connector	2
[35]	Cylinder screw M5 x 8	2

[14] SEC rebate-clearance reduction flush-encased gearbox — 1

			№
SEC rebate-clearance reduction ESP	For Roto Line lock. handles	50 Piece(s)	334360

[15] SEC drilling protection — 1

			№
SEC drilling protection	For Roto Line lock. handles	10 Piece(s)	487406

[24] Countersunk screw ST4.8 x 16 — 1

			№
Countersunk screw	ST4,8x16	100 Piece(s)	728933

[11] Roto Line window handle, lockable — 1

→ CTL_1

Alternatively:

[a] Roto Line window handle – geared-handle, lockable — 1 → CTL_1

Espagnolette support — 1 → *from page 172*

Cylinder screw M5 x 12 — 2 → *from page 178*

[13] Countersunk screw M5 x 30 — 1

			№
Countersunk screw	M5x30	100 Piece(s)	212501

Height-dependent components

[5] Striker

			№
V.01	9	100 Piece(s)	728918

			№
V.02	9	100 Piece(s)	728920

≤ 1300	–
1301 – 1800	2
1801 – 2400	4
> 2400	6

[6] Cam, insertable

		№
Insertable	100 Piece(s)	334671

≤ 1300	–
1301 – 1800	2
1801 – 2400	4
> 2400	6

Width-dependent components

[5] Striker

			№
V.01	9	100 Piece(s)	728918
V.02	9	100 Piece(s)	728920

≤ 1300	–
> 1300	2

[6] Cam, insertable

		№
Insertable	100 Piece(s)	334671

≤ 1300	–
> 1300	2

[7] SEC striker

			№
V.01	9	100 Piece(s)	212637
V.02	9	100 Piece(s)	212638

≤ 1100	–
> 1100	1

[8] SEC cam RC 3

		№
Insertable	100 Piece(s)	443530

≤ 1100	–
> 1100	1

4.4 Tilt-Only hardware, handle at the top

4.4.1 TiSt | 100 kg

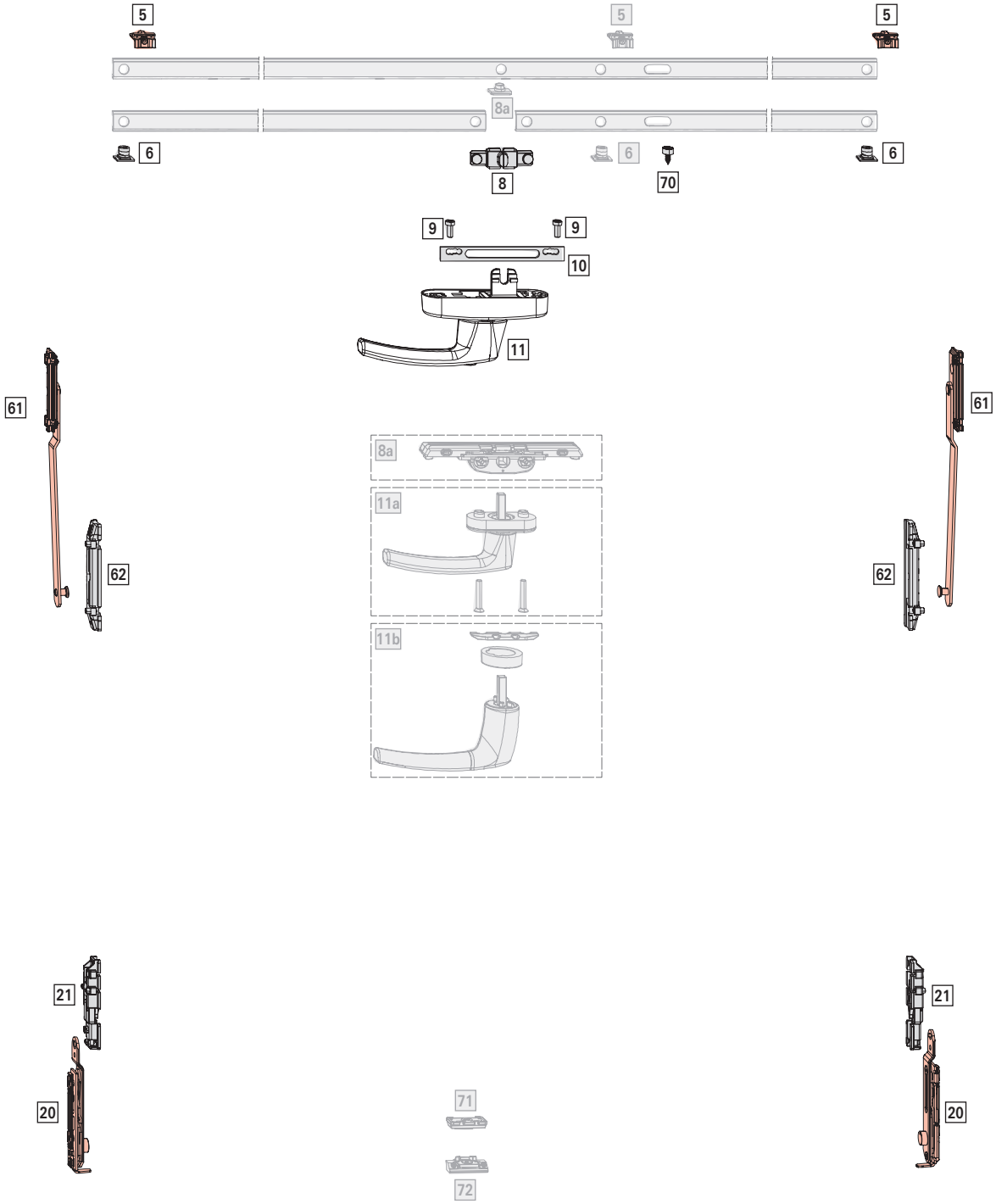

Application range

Sash width **SW**: 520 - 1600 mm

Sash height **SH**: 500 - 1300 mm

S.kg: max. 100 kg

INFO
Only use bearings / clamp strips which have been approved for the profile. Information can be obtained from Roto sales representatives.

Basic set

[*] TiSt locking components set 1
Large packages

		№
V.01	10 Piece(s)	728858
V.02	10 Piece(s)	728859

Contents:

[*]		#
[5]	Striker V.01 / V.02	2
[6]	Cam, insertable	2
[61]	Tilt-Only stay arm, compl.	2
[62]	Slide bar, compl.	2

[20] Rebate sash stay with clamp strip 2

			№
No. 1	Left	10 Piece(s)	627256
	Right	10 Piece(s)	627255
No. 3	Left	10 Piece(s)	627258
	Right	10 Piece(s)	627257
No. 4	Left	10 Piece(s)	627260
	Right	10 Piece(s)	627259

[21] Rebate stay hinge 2

	№
10 Piece(s)	740811

[70] Locking sleeve 1

				№
Locking sleeve	Blocks the movement of the espagnolette (90°)	1	100 Piece(s)	738549

Espagnolette and connector

[*] T connector set 1
Alternatively:
[27] Connector bolt, insertable 1

[8a] Flush-encased gearbox 1 → *from page 173*

		№
AL T connector set	10 Piece(s)	728981

Contents:

[*]		
[8]	T connector	1
[9]	Cylinder screw M5 x 12	2

[10] Espagnolette support 1

				№
Espagnolette support	For Roto Line AL geared-handle	13.5	100 Piece(s)	331937

[11] Roto Line window handle – geared-handle 1 → CTL_1
Alternatively:
[a] Roto Line window handle – standard 1 → CTL_1
Countersunk screw M5 x 30 2
[b] Roto Line window handle – handle without escutcheon 1 → CTL_1
Ring for handle without escutcheon 1
Mounting plate 1

Width-dependent components

[5] Striker

			№
V.01	9	100 Piece(s)	728918
V.02	9	100 Piece(s)	728920

≤ 1300	–
> 1300	1

[6] Cam, insertable

		№
Insertable	100 Piece(s)	334671

≤ 1300	–
> 1300	1

[*] CL set

		№
V.01	10 Piece(s)	740813
V.02	10 Piece(s)	740812

Contents:

[*]		#
[71]	CL sash component	1
[72]	CL frame component V.01 / V.02	1

≤ 1300	–
> 1300	1

4.4.2 TiSt | RC 2 | 100 kg

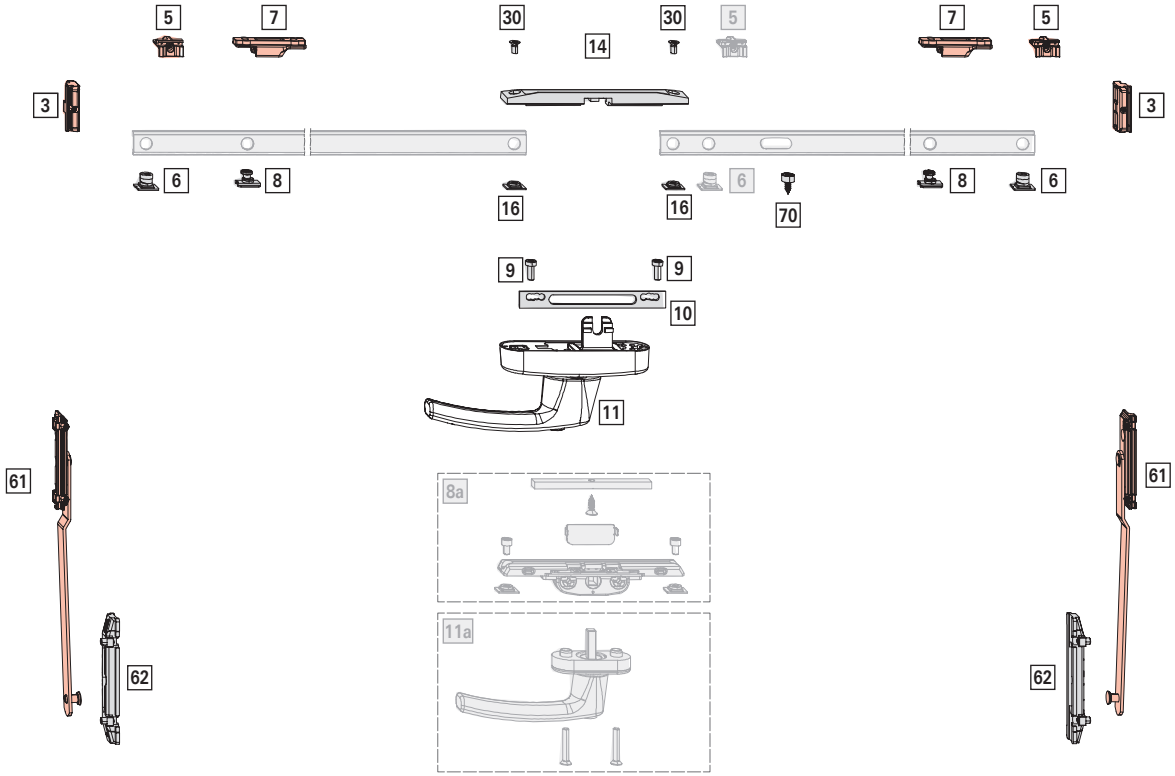

Application range

Sash width **SW**: 520 - 1600 mm

Sash height **SH**: 500 - 1300 mm

S.kg: max. 100 kg

INFO
Only use bearings / clamp strips which have been approved for the profile. Information can be obtained from Roto sales representatives.

Basic set

[*] TiSt locking components set 1
Large packages

		№
V.01	10 Piece(s)	728858
V.02	10 Piece(s)	728859

Contents:

[*]		#
[5]	Striker V.01 / V.02	2
[6]	Cam, insertable	2
[61]	Tilt-Only stay arm, compl.	2
[62]	Slide bar, compl.	2

[20] Rebate sash stay with clamp strip 2

			№
No. 1	Left	10 Piece(s)	627256
	Right	10 Piece(s)	627255
No. 3	Left	10 Piece(s)	627258
	Right	10 Piece(s)	627257
No. 4	Left	10 Piece(s)	627260
	Right	10 Piece(s)	627259

[21] Rebate stay hinge 2

	№
10 Piece(s)	740811

[70] Locking sleeve 1

				№
Locking sleeve	Blocks the movement of the espagnolette (90°)	1	100 Piece(s)	738549

[*] SEC hinge lock set 2

		№
V.01	10 Piece(s)	728940
V.02	10 Piece(s)	728941

Contents:

[*]		#
[24]	Countersunk screw ST4.8 x 16	3
[39]	Frame component V.01 / V.02	1
[40]	Sash component	1

[2] Tilt striker 2

		№
Tilt striker	100 Piece(s)	728860

[7] SEC striker 2

			№
V.01	9	100 Piece(s)	212637
V.02	9	100 Piece(s)	212638

[8] SEC cam RC 2 2

		№
Insertable	100 Piece(s)	447245

Espagnolette and connector

[*] SEC espagnolette protection set 1
Large packages
Alternatively:
[8a] SEC flush-encased gearbox set 1 → *from page 180*

		№
SEC espagnolette protection set	10 Piece(s)	728952

Contents:

[*]		#
[14]	SEC espagnolette protection	1
[16]	SEC connector	2
[30]	Countersunk screw M5 x 10	2

[9] Cylinder screw M5 x 12 2

			№
Cylinder screw	M5x12	100 Piece(s)	728925

[10] Espagnolette support 1

				№
Espagnolette support	For Roto Line AL geared-handle	13.5	100 Piece(s)	331937

[11] Roto Line window handle – geared-handle, lockable 1
→ CTL_1
Alternatively:
[a] Roto Line window handle, lockable 1 → CTL_1
Countersunk screw M5 x 30 2

Width-dependent components

[5] Striker

			№
V.01	9	100 Piece(s)	728918
V.02	9	100 Piece(s)	728920

≤ 1300	–
> 1300	1

[6] Cam, insertable

		№
Insertable	100 Piece(s)	334671

≤ 1300	–
> 1300	1

[*] CL set

		№
V.01	10 Piece(s)	740813
V.02	10 Piece(s)	740812

Contents:

[*]		#
[71]	CL sash component	1
[72]	CL frame component V.01 / V.02	1

≤ 1300	–
> 1300	1

4.4.3 TiSt | RC 3 | 100 kg

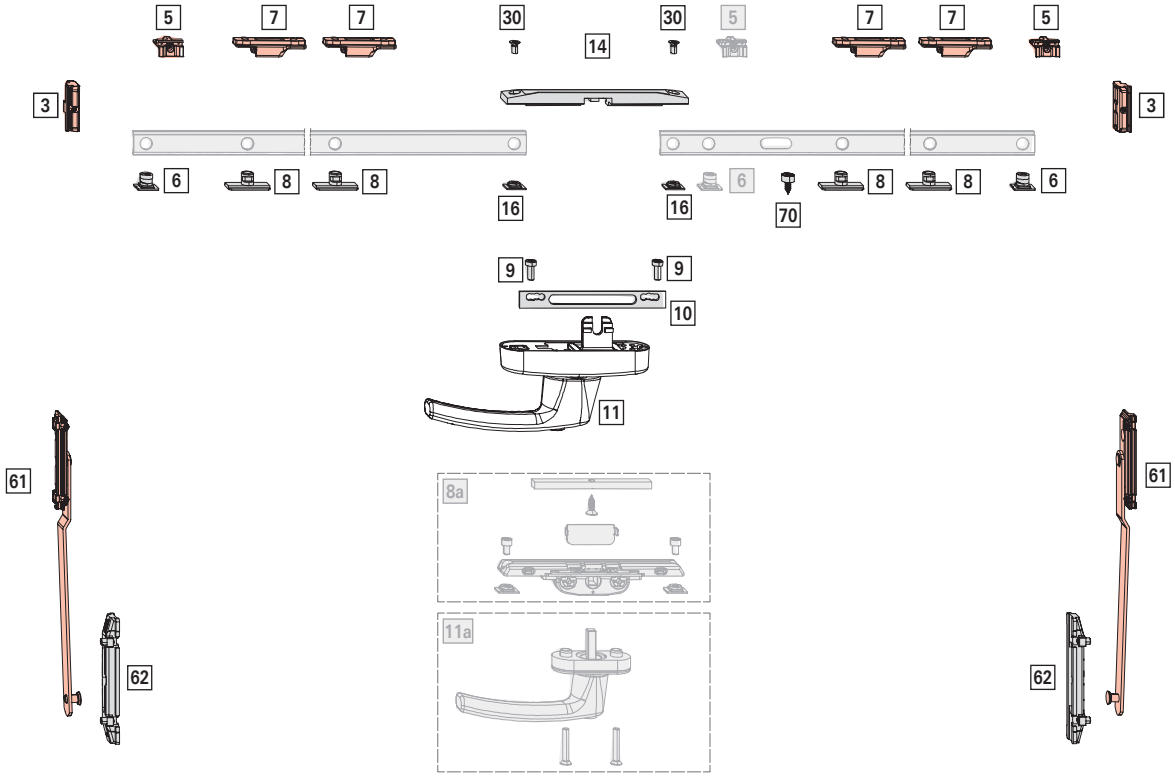

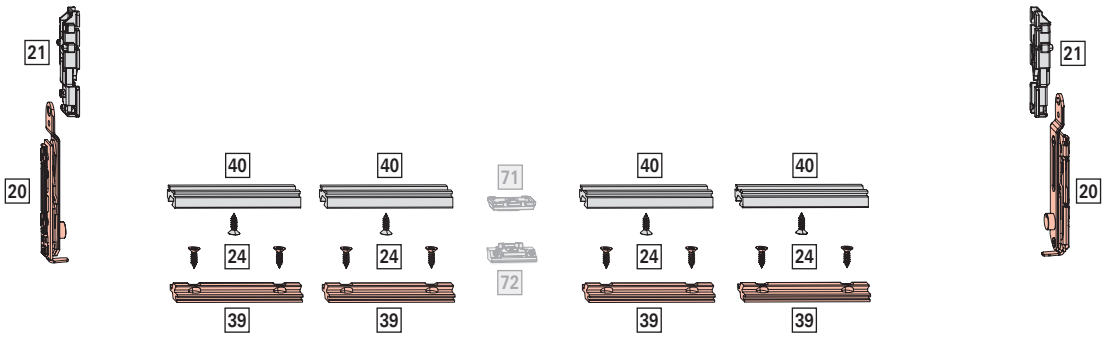

Application range

Sash width **SW**: 670 - 1600 mm

Sash height **SH**: 500 - 1300 mm

S.kg: max. 100 kg

INFO
Only use bearings / clamp strips which have been approved for the profile. Information can be obtained from Roto sales representatives.

Basic set

[*] TiSt locking components set 1
Large packages

		№
V.01	10 Piece(s)	728858
V.02	10 Piece(s)	728859

Contents:

[*]		#
[5]	Striker V.01 / V.02	2
[6]	Cam, insertable	2
[61]	Tilt-Only stay arm, compl.	2
[62]	Slide bar, compl.	2

[20] Rebate sash stay with clamp strip 2

			№
No. 1	Left	10 Piece(s)	627256
	Right	10 Piece(s)	627255
No. 3	Left	10 Piece(s)	627258
	Right	10 Piece(s)	627257
No. 4	Left	10 Piece(s)	627260
	Right	10 Piece(s)	627259

[21] Rebate stay hinge 2

	№
10 Piece(s)	740811

[70] Locking sleeve 1

				№
Locking sleeve	Blocks the movement of the espagnolette (90°)	1	100 Piece(s)	738549

[*] SEC hinge lock set 4

		№
V.01	10 Piece(s)	728940
V.02	10 Piece(s)	728941

Contents:

[*]		#
[24]	Countersunk screw ST4.8 x 16	3
[39]	Frame component V.01 / V.02	1
[40]	Sash component	1

[2] Tilt striker 2

		№
Tilt striker	100 Piece(s)	728860

[7] SEC striker 4

			№
V.01	9	100 Piece(s)	212637
V.02	9	100 Piece(s)	212638

[8] SEC cam RC 3 4

		№
Insertable	100 Piece(s)	447245

Espagnolette and connector

[*] SEC espagnolette protection set 1
Large packages
Alternatively:
[8a] SEC flush-encased gearbox set 1 → *from page 180*

		№
SEC espagnolette protection set	10 Piece(s)	728952

Contents:

[*]		#
[14]	SEC espagnolette protection	1
[16]	SEC connector	2
[30]	Countersunk screw M5 x 10	2

[9] Cylinder screw M5 x 12 2

			№
Cylinder screw	M5x12	100 Piece(s)	728925

[10] Espagnolette support 1

				№
Espagnolette support	For Roto Line AL geared-handle	13.5	100 Piece(s)	331937

[11] Roto Line window handle – geared-handle, lockable 1
→ CTL_1
Alternatively:
[a] Roto Line window handle, lockable 1 → CTL_1
Countersunk screw M5 x 30 2

Width-dependent components

[5] Striker

			№
V.01	9	100 Piece(s)	728918
V.02	9	100 Piece(s)	728920

≤ 1300	–
> 1300	1

[6] Cam, insertable

		№
Insertable	100 Piece(s)	334671

≤ 1300	–
> 1300	1

[*] CL set

		№
V.01	10 Piece(s)	740813
V.02	10 Piece(s)	740812

Contents:

[*]		#
[71]	CL sash component	1
[72]	CL frame component V.01 / V.02	1

≤ 1300	–
> 1300	1

4.5 Floating-mullion hardware

4.5.1 FM

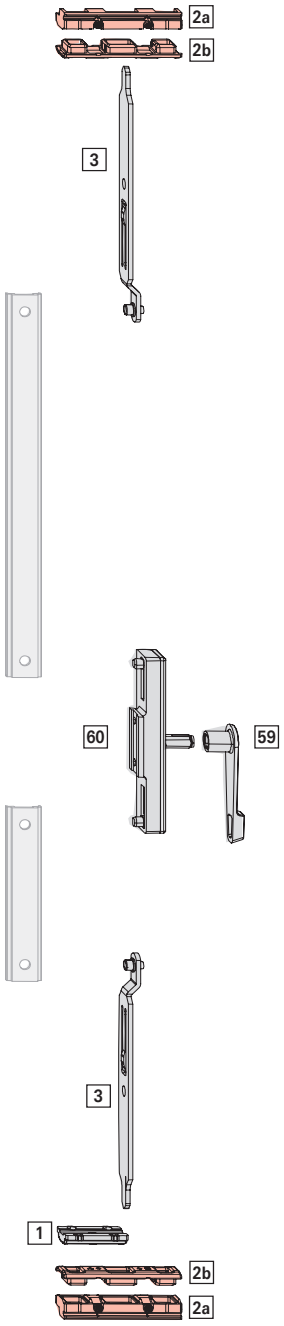

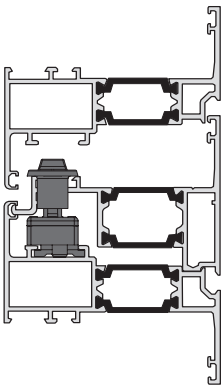

Application range

Sash width **SW** (second opening sash): 200 - 1600 mm

Sash height **SH**: 675 - 2700 mm

Locking side of second opening sash

[*]	FM locking components set	1
		№
FM locking components set	10 Piece(s)	798167

Contents:

[*]		#
[1]	Run-up block	1
[2a]	Multi-ported striker bottom part	2
[2b]	Multi-ported striker top part VB 5/6	2
[3]	Shootbolt rod (length 152; width 19.1)	2
[59]	Operating lever	1
[60]	FM espagnolette	1
	Reducing sleeve (not sh.)	4

4.5.2 FM-Su

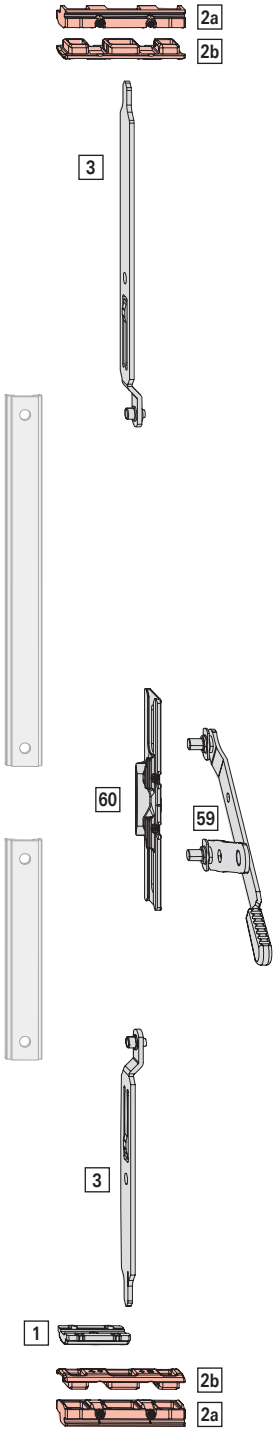

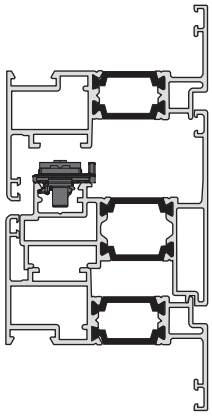

Application range

Sash width **SW** (second opening sash): 200 - 1600 mm

Sash height **SH**: 675 - 2700 mm

INFO
Can only be used in profiles with a double-C-groove.

Locking side of second opening sash

[*] FM-Su espagnolette set; surface-mounted 1

		№
FM-Su espagnolette set; surface-mounted	20 Piece(s)	728964

Contents:

[*]		#
[59]	Toggle lever, compl.	1
[60]	Guide rail, compl.	1

[1] Run-up block 2

		№
Run-up block	100 Piece(s)	212008

[*] Multi-ported striker set 2

		№
VB 1/2	20 Piece(s)	728912
VB 3/4	20 Piece(s)	728913
VB 5/6	20 Piece(s)	728914

Contents:

[*]		#
[2a]	Multi-ported striker bottom part	1
[2b]	Multi-ported striker top part	1

[3] Shootbolt rod 2

				№
Top	191	19.1	100 Piece(s)	341486
		18.3	100 Piece(s)	341487
		17.5	100 Piece(s)	341488
Bottom	152	19.1	100 Piece(s)	212144
		18.3	100 Piece(s)	212145
		17.5	100 Piece(s)	212146

4.5.3 FM-SuN

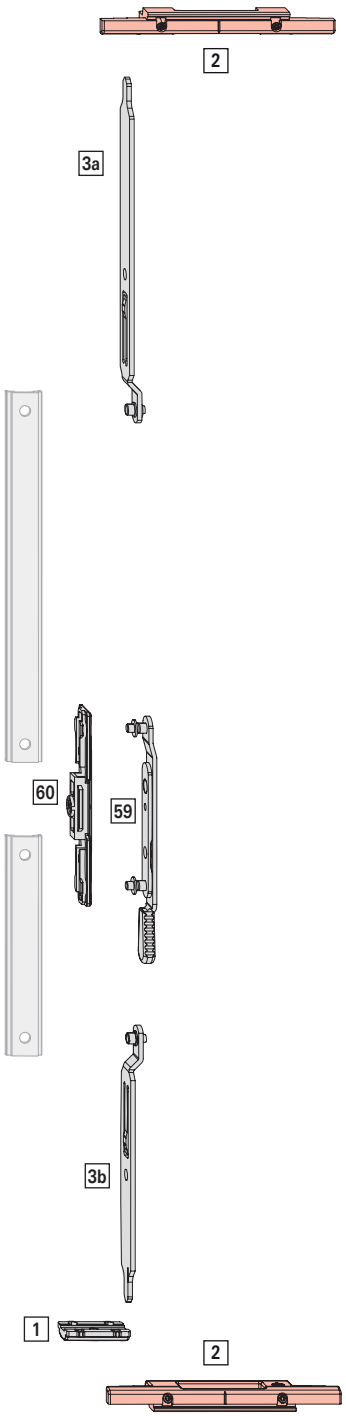

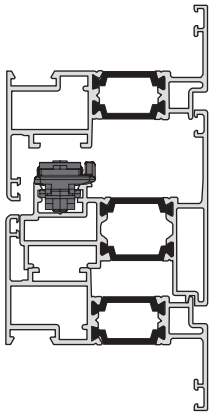

Application range

For narrow floating-mullion profiles with connecting rod groove < 15 mm.

Sash width **SW** (second opening sash): 200 - 1600 mm

Sash height **SH**: 675 - 2700 mm

INFO
Can only be used in profiles with a double-C-groove.

Locking side of second opening sash

[*]	FM-SuN locking components set	1
		№
FM-SuN locking component set	10 Piece(s)	776947

Contents:

[*]		#
[1]	Run-up block	1
[2]	FM-Sh multi-ported striker, compl.	2
[3a]	FM-SuN shootbolt rod, right	2
[3b]	FM-SuN shootbolt rod, left	2
[59]	Toggle lever, compl.	1
[60]	Guide rail, compl.	1

INFO
Connecting rods from the Roto product range cannot be used. Narrower connecting rods are required.

4.5.4 FM-Sh

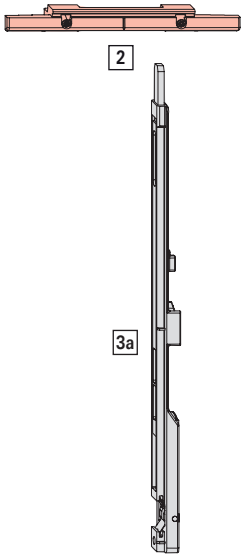

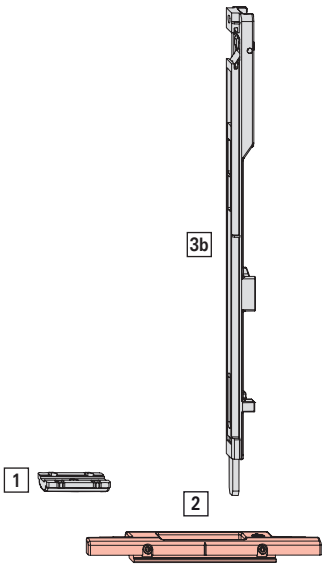

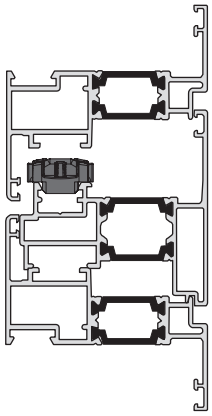

Application range

Sash width **SW** (second opening sash): 200 - 1600 mm

Sash height **SH**: 720 - 2700 mm

Locking side of second opening sash

[*]	FM-Sh locking components set	1
		№
FM-Sh locking components set	10 Piece(s)	728960

Contents:

[*]		#
[1]	Run-up block	1
[2]	FM-Sh multi-ported striker, compl.	2
[3a]	FM-Sh shootbolt, top	1
[3b]	FM-Sh shootbolt, bottom	1
	Self-tapping screw ST3.9 x 25 (not shown)	1

4.5.5 FM-R

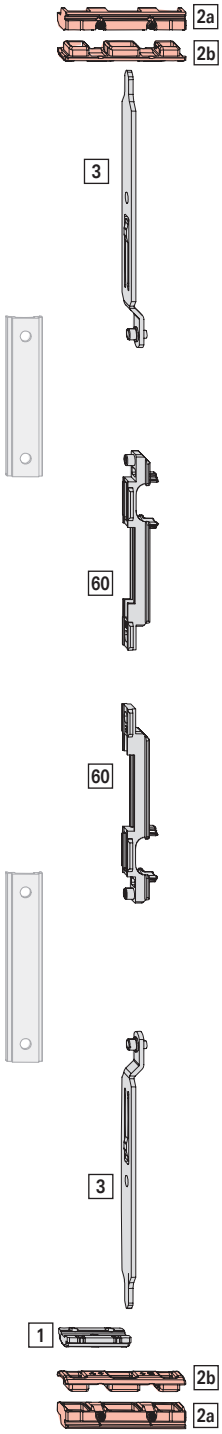

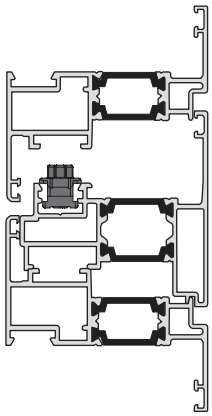

Application range

Sash width **SW** (second opening sash): 200 - 1600 mm

Sash height **SH**: 725 - 2700 mm

INFO
Can only be used in profiles with a double-C-groove.

Locking side of second opening sash

[60] Slider 2

		Nº
19	100 Piece(s)	212141
18	100 Piece(s)	212142
18	100 Piece(s)	212143

[1] Run-up block 2

		Nº
Run-up block	100 Piece(s)	212008

[*] Multi-ported striker set 2

		Nº
VB 1/2	20 Piece(s)	728912
VB 3/4	20 Piece(s)	728913
VB 5/6	20 Piece(s)	728914

Contents:

[*]		#
[2a]	Multi-ported striker bottom part	1
[2b]	Multi-ported striker top part	1

[3] Shootbolt rod 2

				Nº
Top	191	19.1	100 Piece(s)	341486
		18.3	100 Piece(s)	341487
		17.5	100 Piece(s)	341488
Bottom	152	19.1	100 Piece(s)	212144
		18.3	100 Piece(s)	212145
		17.5	100 Piece(s)	212146

4.5.6 FM, couplable (second opening sash) | 150 kg

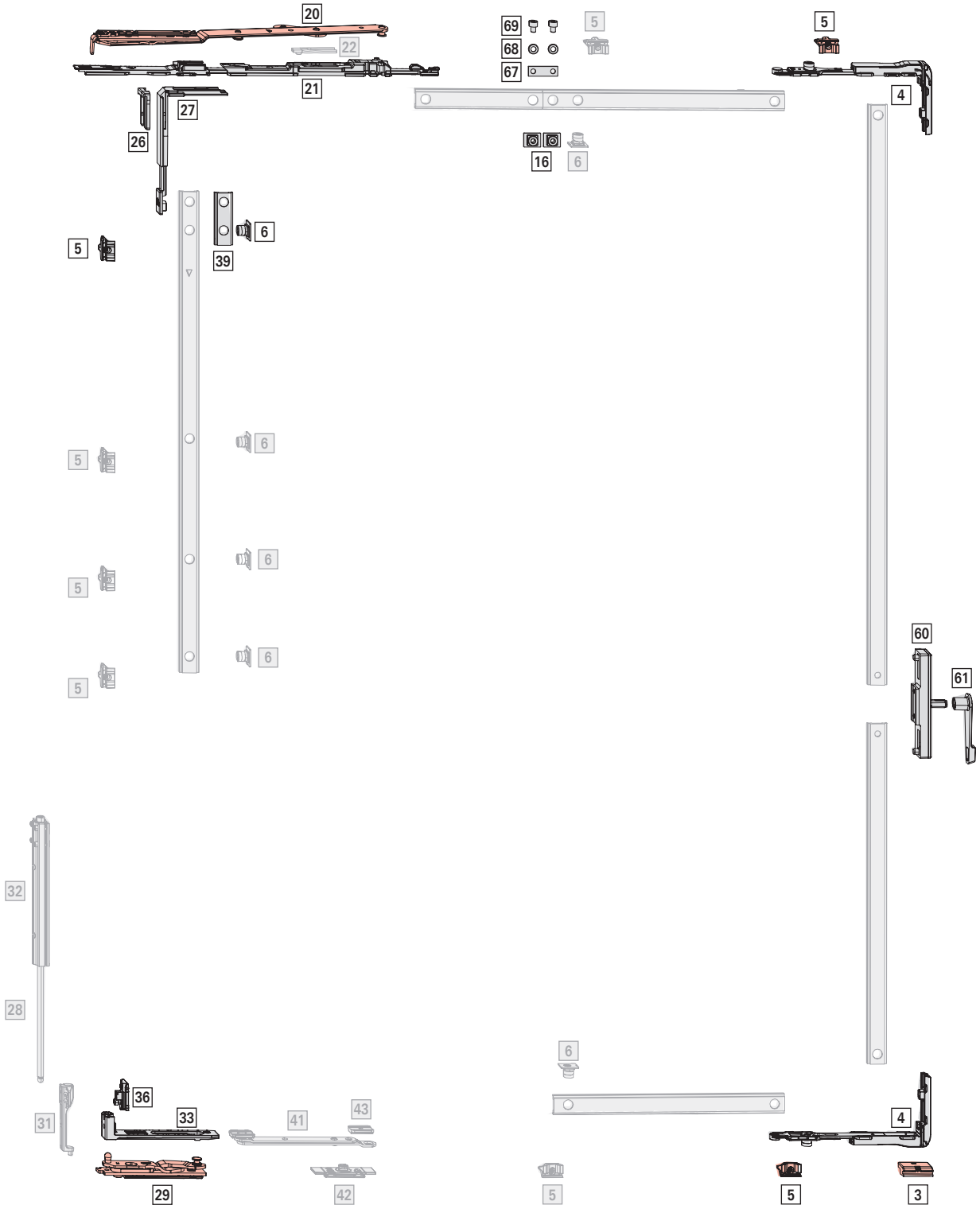

Application range

Sash width **SW** (second opening sash): 710 - 1600 mm

Sash height **SH**: 675 - 2700 mm

S.kg: max. 150 kg

INFO
Only use bearings / clamp strips which have been approved for the profile. Information can be obtained from Roto sales representatives.

Basic set

[29] Pivot rest with clamp strip — 1

			Nº
No. 1	Left	10 Piece(s)	624970
	Right	10 Piece(s)	624969
No. 3	Left	10 Piece(s)	624972
	Right	10 Piece(s)	624971
No. 4	Left	10 Piece(s)	624974
	Right	10 Piece(s)	624973

[*] Corner hinge set — 1

		Nº
Left	10 Piece(s)	739700
Right	10 Piece(s)	739699

Contents:

[*]		#
[33]	Corner hinge	1
[36]	Adjustment piece	1

[*] T-O locking components set — 1

		Nº
V.01	10 Piece(s)	728743
V.02	10 Piece(s)	728744

[*]		
[3]	Run-up wedge V.01 / V.02	1
[4]	Corner drive without blocking device, with retaining fork	2
[5]	Striker V.01 / V.02	4
[6]	Cam, insertable	2

[*] Coupler component set — 1

			Nº
Coupler component set	For coupling a connecting rod	100 Piece(s)	728856

[*]		#
[16]	SEC connector	2
[67]	SEC coupler component, plate	1
[68]	Washer	2
[69]	Cylinder screw M5 x 6	2

[21] Scissor stay guide — 1

		Nº
500	10 Piece(s)	740850

[20] Sash stay — 1

					Nº
500	No. 1	130	Left	10 Piece(s)	624945
		130	Right	10 Piece(s)	624944
	No. 3	130	Left	10 Piece(s)	624951
		130	Right	10 Piece(s)	624950
	No. 4	130	Left	10 Piece(s)	624957
		130	Right	10 Piece(s)	624956

[*] CL corner drive set — 1
Large packages

		Nº
V.01	20 Piece(s)	728842
V.02	20 Piece(s)	728843

Contents:

[*]		#
[5]	Striker V.01 / V.02	2
[6]	Cam, insertable	2
[26]	Retaining fork	1
[27]	CL corner drive	1

Espagnolette and connector

[*] FM espagnolette set — 1

		Nº
FM espagnolette set	20 Piece(s)	728965

Contents:

[*]		#
[60]	FM espagnolette, internal	1
[61]	Operating lever	1
	Reducing sleeve	2

Height-dependent components

[5] Striker

			Nº
V.01	9	100 Piece(s)	728918

V.02	9	100 Piece(s)	728920

≤ 1800	–
1801 – 2400	1
> 2400	2

[6] Cam, insertable

Insertable	100 Piece(s)	334671

≤ 1800	–
1801 – 2400	1
> 2400	2

[22] Tilt distance restrictor; SH ≤ 800 mm / reduce tilt distance 1

For sash stay 500 / 735	10 Piece(s)	502834

INFO
Using the tilt distance restrictor limits the tilt distance of the sash stay to 100 mm.

[39] Connecting rod, fixed, vertical (CR4) 1
→ *from page 175*

Width-dependent components

[*] Turn restrictor set, with stop 1
Alternatively:
Turn restrictor set, braked, damped 1 → *from page 182*

Clampable	V.01	10 pieces	740814
	V.02	10 pieces	740835

Contents:

[*]		
[41]	Rotating arm, compl.	1
[42]	Stop	1
[43]	Bearing, compl.	1

≤ 1200	–
> 1200	1

Weight-dependent components

[*] Load transfer set; S.kg > 100 kg 1

V.01	Left	10 Piece(s)	739694
	Right	10 Piece(s)	739693
V.02	Left	10 Piece(s)	739696
	Right	10 Piece(s)	739695

Contents:

[*]		#
[28]	Support rod	1
[31]	Frame bearing V.01 / V.02	1
[32]	Sash component	1

4.5.7 FM, couplable (second opening sash) | RC 2 | 150 kg

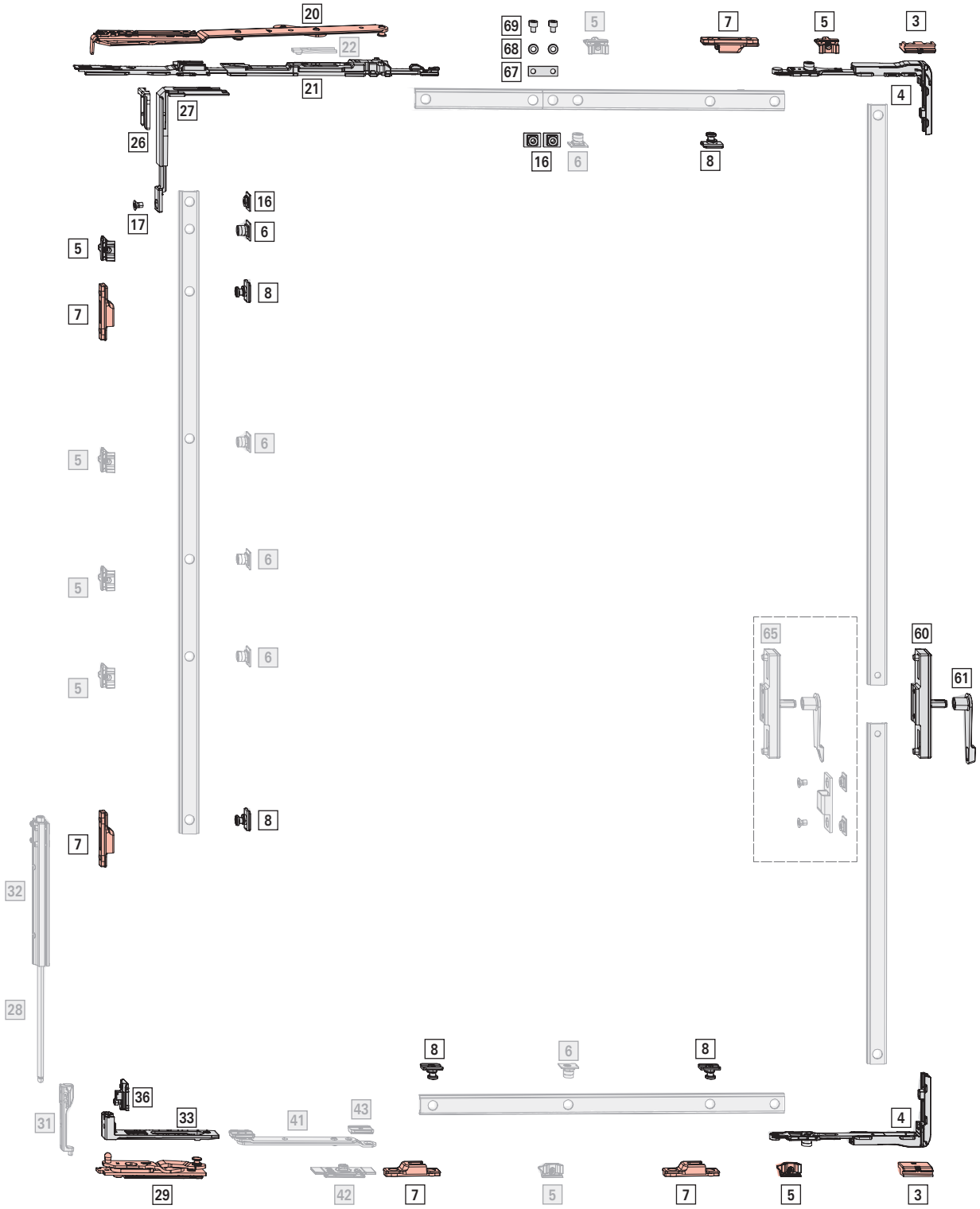

Application range

Sash width **SW** (second opening sash): 800 - 1600 mm

Sash height **SH**: 720 - 2700 mm

S.kg: max. 150 kg

INFO
Only use bearings / clamp strips which have been approved for the profile. Information can be obtained from Roto sales representatives.

Basic set

[29] Pivot rest with clamp strip — 1

			Nº
No. 1	Left	10 Piece(s)	624970
	Right	10 Piece(s)	624969
No. 3	Left	10 Piece(s)	624972
	Right	10 Piece(s)	624971
No. 4	Left	10 Piece(s)	624974
	Right	10 Piece(s)	624973

[*] Corner hinge set — 1

		Nº
Left	10 Piece(s)	739700
Right	10 Piece(s)	739699

Contents:

[*]		#
[33]	Corner hinge	1
[36]	Adjustment piece	1

[*] T-O locking components set — 1

		Nº
V.01	10 Piece(s)	728743
V.02	10 Piece(s)	728744

[*]		
[3]	Run-up wedge V.01 / V.02	1
[4]	Corner drive without blocking device, with retaining fork	2
[5]	Striker V.01 / V.02	4
[6]	Cam, insertable	2

[*] Coupler component set — 1

			Nº
Coupler component set	For coupling a connecting rod	100 Piece(s)	728856

[*]		#
[16]	SEC connector	2
[67]	SEC coupler component, plate	1
[68]	Washer	2
[69]	Cylinder screw M5 x 6	2

[21] Scissor stay guide — 1

		Nº
500	10 Piece(s)	740850

[20] Sash stay — 1

					Nº
500	No. 1	130	Left	10 Piece(s)	624945
		130	Right	10 Piece(s)	624944
	No. 3	130	Left	10 Piece(s)	624951
		130	Right	10 Piece(s)	624950
	No. 4	130	Left	10 Piece(s)	624957
		130	Right	10 Piece(s)	624956

[*] CL SEC corner drive set — 1
Large packages

		Nº
SEC corner drive CL set with retaining fork	10 Piece(s)	728944

[*]		#
[16]	SEC connector	1
[17]	Countersunk screw M5 x 7	1
[26]	SEC retaining fork	1
[27]	CL SEC corner drive	1

[7] SEC striker — 5

			Nº
V.01	9	100 Piece(s)	212637
V.02	9	100 Piece(s)	212638

[8] SEC cam RC 2 — 5

		Nº
Insertable	100 Piece(s)	447245

[3] Run-up wedge — 1

			Nº
Run-up wedge	V.01	100 Piece(s)	684282
	V.02	100 Piece(s)	684283

Espagnolette and connector

[*] FM espagnolette set — 1
Alternative (profile related):

[65] FM SEC espagnolette set		→ *from page 181*
		№
FM espagnolette set	20 Piece(s)	728965

Contents:

[*]		#
[60]	FM espagnolette, internal	1
[61]	Operating lever	1
	Reducing sleeve	2

Height-dependent components

[5] Striker

			№
V.01	9	100 Piece(s)	728918
V.02	9	100 Piece(s)	728920

≤ 1800	–
1801 – 2400	1
> 2400	2

[6] Cam, insertable

		№
Insertable	100 Piece(s)	334671

≤ 1800	–
1801 – 2400	1
> 2400	2

[22] Tilt distance restrictor; SH ≤ 800 mm / reduce tilt distance — 1

		№
For sash stay 500 / 735	10 Piece(s)	502834

INFO
Using the tilt distance restrictor limits the tilt distance of the sash stay to 100 mm.

Width-dependent components

[5] Striker

			№
V.01	9	100 Piece(s)	728918
V.02	9	100 Piece(s)	728920

≤ 1300	–
> 1300	2

[6] Cam, insertable

		№
Insertable	100 Piece(s)	334671

≤ 1300	–
> 1300	2

[*] Turn restrictor set, with stop — 1

Alternatively:
Turn restrictor set, braked, damped — 1 → *from page 182*

			№
Clampable	V.01	10 pieces	740814
	V.02	10 pieces	740835

Contents:

[*]		
[41]	Rotating arm, compl.	1
[42]	Stop	1
[43]	Bearing, compl.	1

≤ 1200	–
> 1200	1

Weight-dependent components

[*] Load transfer set; S.kg > 100 kg — 1

			№
V.01	Left	10 Piece(s)	739694
	Right	10 Piece(s)	739693
V.02	Left	10 Piece(s)	739696
	Right	10 Piece(s)	739695

Contents:

[*]		#
[28]	Support rod	1
[31]	Frame bearing V.01 / V.02	1
[32]	Sash component	1

4.5.8 FM, couplable (second opening sash) | RC 3 | 150 kg

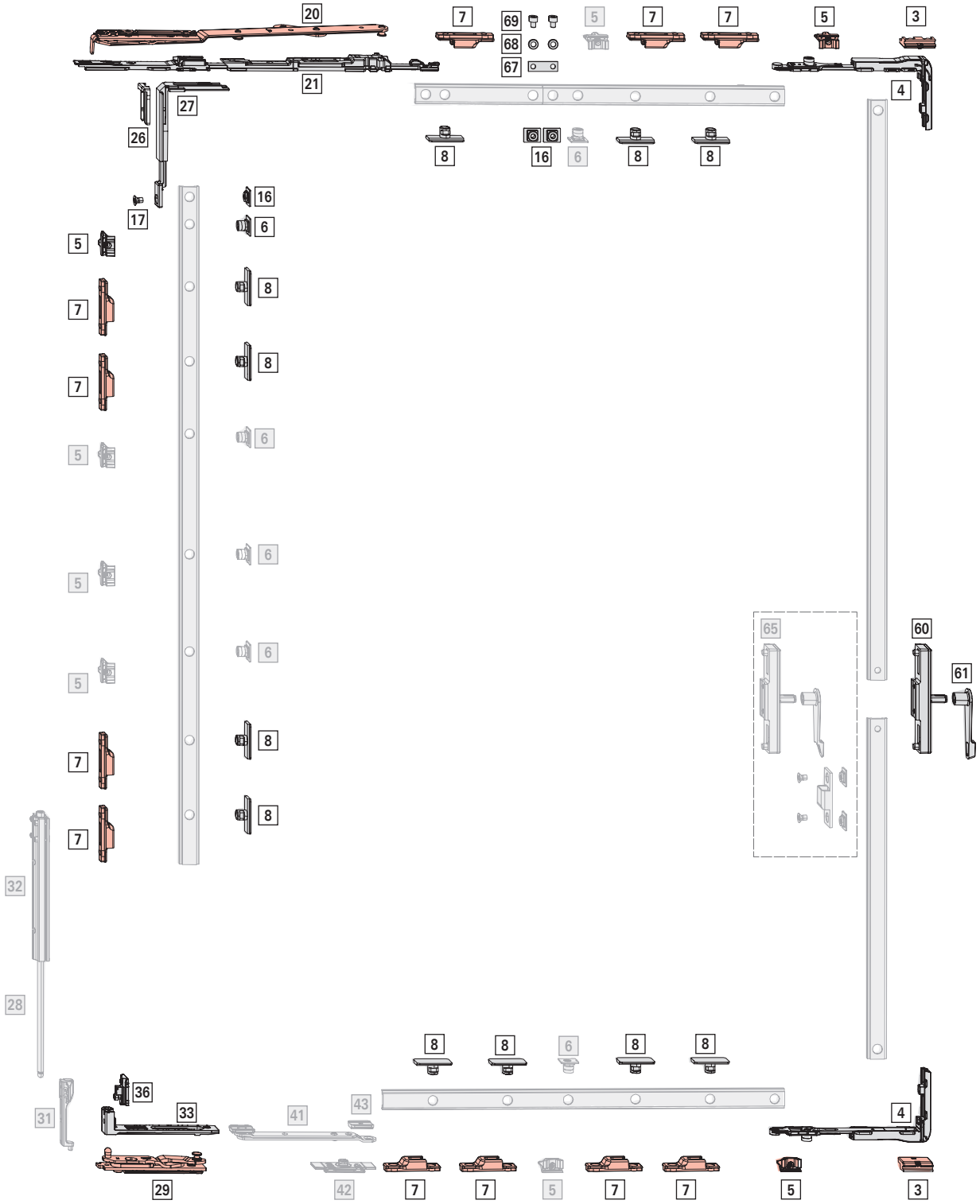

Application range

Sash width **SW** (second opening sash): 875 - 1600 mm

Sash height **SH**: 870 - 2700 mm

S.kg: max. 150 kg

INFO
Only use bearings / clamp strips which have been approved for the profile. Information can be obtained from Roto sales representatives.

Basic set

[29] Pivot rest with clamp strip — 1

			Nº
No. 1	Left	10 Piece(s)	624970
	Right	10 Piece(s)	624969
No. 3	Left	10 Piece(s)	624972
	Right	10 Piece(s)	624971
No. 4	Left	10 Piece(s)	624974
	Right	10 Piece(s)	624973

[*] Corner hinge set — 1

		Nº
Left	10 Piece(s)	739700
Right	10 Piece(s)	739699

Contents:

[*]		#
[33]	Corner hinge	1
[36]	Adjustment piece	1

[*] T-O locking components set — 1

		Nº
V.01	10 Piece(s)	728743
V.02	10 Piece(s)	728744

[*]		
[3]	Run-up wedge V.01 / V.02	1
[4]	Corner drive without blocking device, with retaining fork	2
[5]	Striker V.01 / V.02	4
[6]	Cam, insertable	2

[*] Coupler component set — 1

			Nº
Coupler component set	For coupling a connecting rod	100 Piece(s)	728856

[*]		#
[16]	SEC connector	2
[67]	SEC coupler component, plate	1
[68]	Washer	2
[69]	Cylinder screw M5 x 6	2

[21] Scissor stay guide — 1

		Nº
500	10 Piece(s)	740850

[20] Sash stay — 1

					Nº
500	No. 1	130	Left	10 Piece(s)	624945
		130	Right	10 Piece(s)	624944
	No. 3	130	Left	10 Piece(s)	624951
		130	Right	10 Piece(s)	624950
	No. 4	130	Left	10 Piece(s)	624957
		130	Right	10 Piece(s)	624956

[*] CL SEC corner drive set — 1
Large packages

		Nº
SEC corner drive CL set with retaining fork	10 Piece(s)	728944

[*]		#
[16]	SEC connector	1
[17]	Countersunk screw M5 x 7	1
[26]	SEC retaining fork	1
[27]	CL SEC corner drive	1

[7] SEC striker — 11

			Nº
V.01	9	100 Piece(s)	212637
V.02	9	100 Piece(s)	212638

[8] SEC cam RC 3 — 11

		Nº
Insertable	100 Piece(s)	443530

[3] Run-up wedge — 1

			Nº
Run-up wedge	V.01	100 Piece(s)	684282
	V.02	100 Piece(s)	684283

Espagnolette and connector

[*] FM espagnolette set — 1
Alternative (profile related):

[65] FM SEC espagnolette set		→ *from page 181*
		№
FM espagnolette set	20 Piece(s)	728965

Contents:

[*]		#
[60]	FM espagnolette, internal	1
[61]	Operating lever	1
	Reducing sleeve	2

Height-dependent components

[5] Striker			
			№
V.01	9	100 Piece(s)	728918
V.02	9	100 Piece(s)	728920

≤ 1800	–
1801 – 2400	1
> 2400	2

[6] Cam, insertable		
		№
Insertable	100 Piece(s)	334671

≤ 1800	–
1801 – 2400	1
> 2400	2

Width-dependent components

[5] Striker			
			№
V.01	9	100 Piece(s)	728918
V.02	9	100 Piece(s)	728920

≤ 1300	–
> 1300	2

[6] Cam, insertable		
		№
Insertable	100 Piece(s)	334671

≤ 1300	–
> 1300	2

[*] Turn restrictor set, with stop	1

Alternatively: Turn restrictor set, braked, damped	1	→ *from page 182*
		№
Clampable	V.01	10 pieces	740814
	V.02	10 pieces	740835

Contents:

[*]		
[41]	Rotating arm, compl.	1
[42]	Stop	1
[43]	Bearing, compl.	1

≤ 1200	–
> 1200	1

Weight-dependent components

[*] **Load transfer set**; S.kg > 100 kg			1
			№
V.01	Left	10 Piece(s)	739694
	Right	10 Piece(s)	739693
V.02	Left	10 Piece(s)	739696
	Right	10 Piece(s)	739695

Contents:

[*]		#
[28]	Support rod	1
[31]	Frame bearing V.01 / V.02	1
[32]	Sash component	1

5 Jigs / tools

5.1 Drilling jigs

Sash stay

	№
Sash stay 390, sash stay 500, sash stay 735, additional stay arm	810754

Stay bearing and pivot rest

Groove base thickness > 2 mm

	№
Stay bearing / pivot rest	628534

Geared-handle

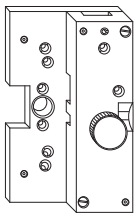

	№
Geared-handle, connecting rod, turn lock	212544

Geared-handle

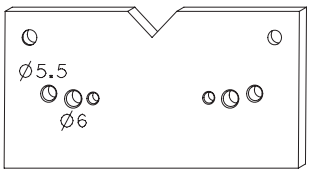

	№
Roto Line AL geared-handle	333473

Flush-encased gearbox and handle without escutcheon

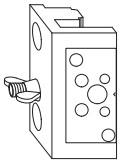

	№
Flush-encased gearbox and handle without escutcheon	365361

Flush-encased gearbox with Roto Line handle

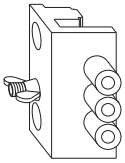

	№
Flush-encased gearbox with / without mishandling device	212155

Connecting rod

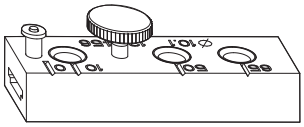

	№
Connecting rod	333472

Striker

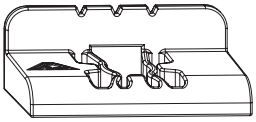

	№
Striker	774540

5.2 Positioning jigs

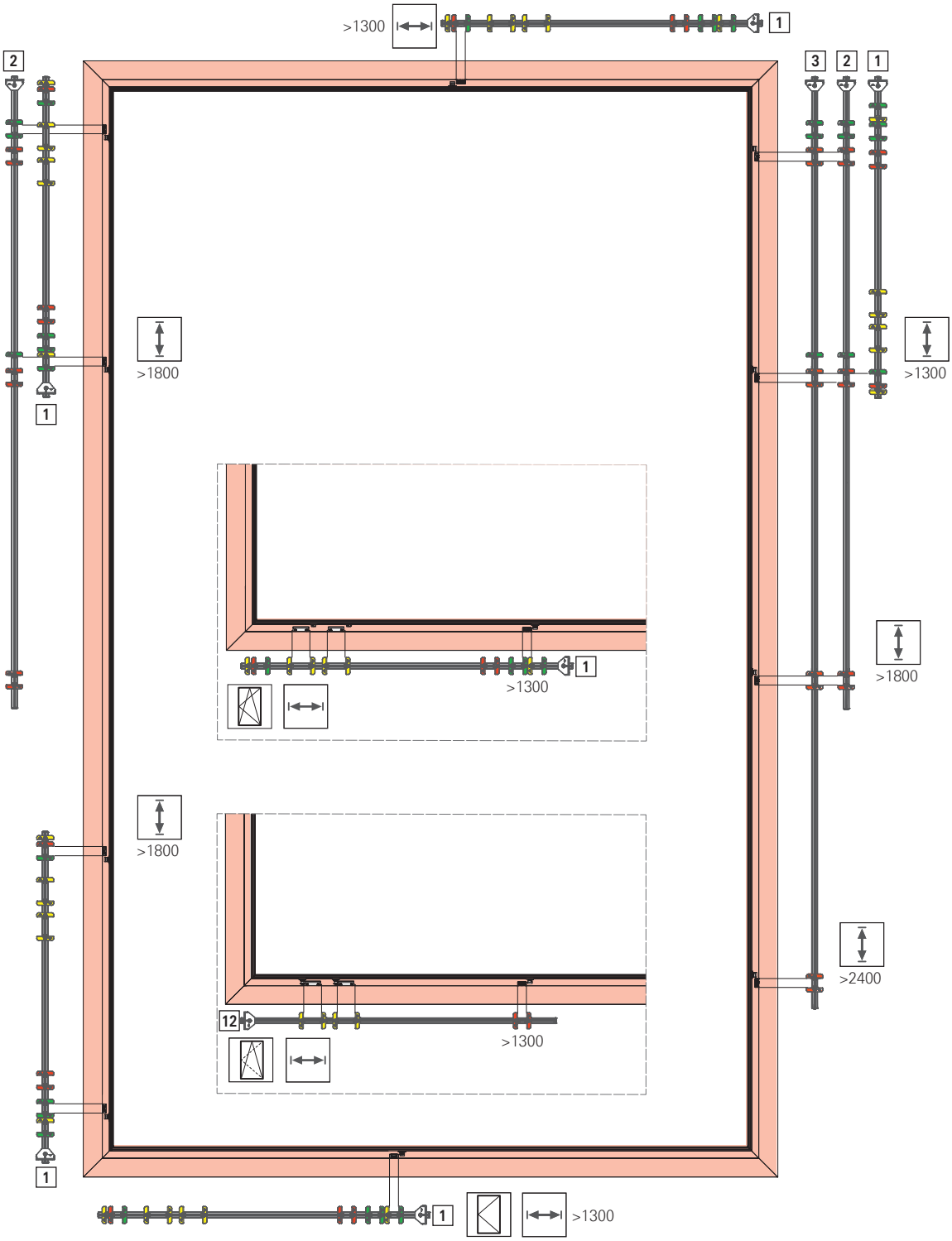

Positioning jigs, horizontal

				№
Positioning jig, short	1300 – 1600 mm	–	1 Piece(s)	739601
Positioning jig, short, 180 kg	1300 – 1600 mm	180 kg	1 Piece(s)	768934

Positioning jigs, vertical

				№
Positioning jig, short	1300 – 1800 mm	–	1 Piece(s)	739601
Positioning jig, medium	1801 – 2400 mm		1 Piece(s)	739602
Positioning jig, long	2401 – 3000 mm		1 Piece(s)	739600

Size-specific combinations:

Description	Assignment	Position	Application range	Weight	T&T	TF	T-O	TiS
Positioning jig, short	[1]	Espagnolette side	SH 1301 – 1800 mm	–	■	■	■	–
Positioning jig, medium	[2]		SH 1801 – 2400 mm	–	■	■	■	–
Positioning jig, short	[1]	Hinge side	SH 1301 – 1800 mm	–	■	■	–	–
Positioning jig, long	[2]		SH 1801 – 2400 mm	–	■	■	–	–
Positioning jig, medium	[3]		SH > 2400 mm	–	■	■	–	–
Positioning jig, short	[1]	Horizontal at the top	SW > 1300 mm	–	■	■	■	–
Positioning jig, short	[1]	Horizontal at the bottom	SW > 1300 mm	–	■	■	–	–
Positioning jig, short, 180 kg	[12]		SW > 1300 mm	> 180 kg	■	■	–	–

5.3 Tools

5.3.1 Hexalobular socket screwdriver

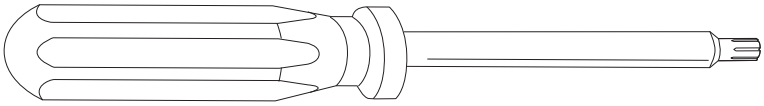

	№
T10 hex key	625172
T15 hexalobular socket screwdriver	625173
T25 hexalobular socket screwdriver	563971

5.3.2 Extractor handle

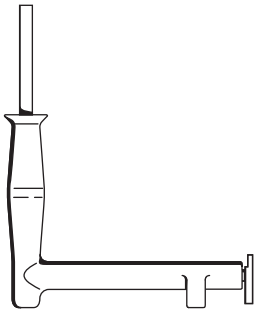

	№
Extractor handle for stay-bearing pin	740068
Replacement blade	230765

5.3.3 Punches

5.3.3.1 Pneumatic punch

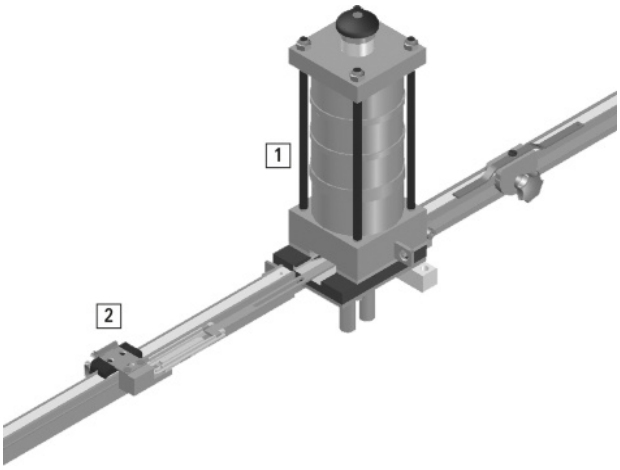

[1] Pneumatic punch – PS 4
[2] Ruler for pneumatic punch – PS 4

	{Koppelstelle}		№
Pneumatic punch – PS 4	Ø 10	1 Piece(s)	350309

Ruler

		№
Ruler for pneumatic punch – PS 3 / PS 4	1 Piece(s)	350314

6 Large packaging for individual components

6.1 Locking components

6.1.1 Corner drives and forks

[19] Corner drive with blocking device

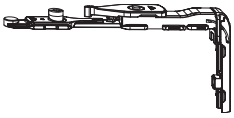

Corner drive with blocking device and retaining fork	100 Piece(s)	490173

[4] Corner drive without blocking device

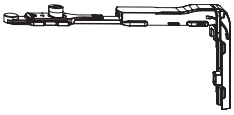

Corner drive without blocking device, with retaining fork	50 Piece(s)	728844

[27] corner drive CL

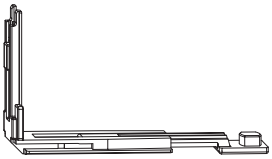

Corner drive CL without retaining fork	20 Piece(s)	331013

[26] Retaining fork

for corner drive CL

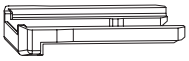

Retaining fork	100 Piece(s)	221772

[27] SEC corner drive CL

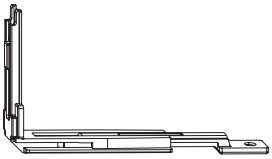

		№
SEC corner drive CL without retaining fork	10 Piece(s)	334359

INFO
Also order the SEC connector → *from page 176*.

[26] SEC retaining fork

for SEC corner drive CL

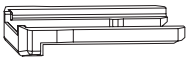

		№
SEC retaining fork	100 Piece(s)	212636

6.1.2 Deadbolt

6.1.2.1 Tilt lock bolt

[4] Tilt lock bolt

for T&T

		№
Tilt lock bolt	100 Piece(s)	490179

[3] Anti-lifting device

for T&T

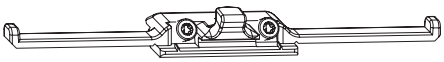

			№
Anti-lifting device	V.01	100 Piece(s)	728696
	V.02	100 Piece(s)	728697

[12] TF tilt lock bolt

		№
TF tilt lock bolt	100 Piece(s)	334757

6.1.2.2 Shootbolt rod

[3a] / [3b] FM-SuN shootbolt rod

for FM-SuN

INFO
Order one DIN R and one DIN L shootbolt rod for each hardware combination and pay attention to the "installation direction" when fitting them (see installation drawing → *from page 311*).

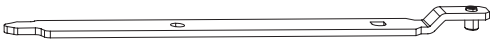

				№
180	14.4	Left	100 Piece(s)	373980
		Right	100 Piece(s)	373979

6.1.2.3 Shootbolt

[3a] / [3b] FM-Sh shootbolt

for FM-Sh

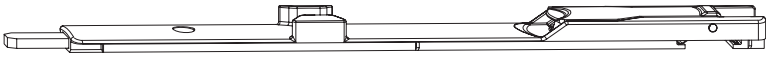

			№
Top	13.8	100 Piece(s)	355560
Bottom	13.8	100 Piece(s)	355561

6.1.3 Run-up blocks

[1] Run-up block (sash)

for T&T / T-O / TiSs

		№
Run-up block	100 Piece(s)	212008

[3] Run-up wedge (frame)

for T&T (S.kg ≥ 180 kg) / TF / T-O

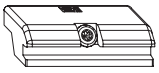

			№
Run-up wedge	V.01	100 Piece(s)	684282
	V.02	100 Piece(s)	684283

6.1.4 Tilt striker

[2] Tilt striker

for T&T / T-O / TiSt

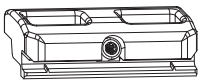

Tilt striker	100 Piece(s)	728860

[2] Tilt striker

for TF

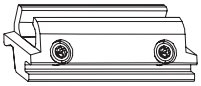

V.01	100 Piece(s)	728973
V.02	100 Piece(s)	728974

[2] TiltSafe tilt striker

for T&T | TiltSafe

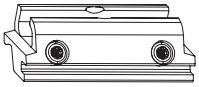

V.01	10 Piece(s)	891052
V.02	10 Piece(s)	891053

6.1.5 Locking components

Striker, 8 mm installation height

(for an unfavourable sash turning curve)

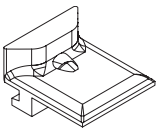

V.01	8	100 Piece(s)	728917
V.02	8	100 Piece(s)	728919

[2] FM-Sh multi-ported striker, compl.

for FM-SuN and FM-Sh

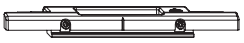

FM-Sh multi-ported striker, compl.	100 Piece(s)	728961

6.2 Espagnolette and connector

6.2.1 Geared-handle

[22] Connector bolt, insertable

SW < 1300 mm

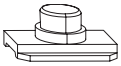

Insertable connector bolt	For Roto Line AL geared-handle	100 Piece(s)	254601

[8] T connector

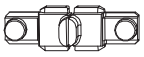

T connector	10 Piece(s)	334754

[10] Espagnolette support

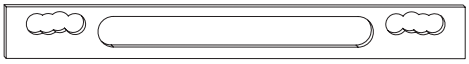

Espagnolette support	For Roto Line AL geared-handle	13.5	100 Piece(s)	331937

[14] SEC espagnolette protection

for geared-handle, lockable

SEC espagnolette protection	For Roto Line AL geared-handle	10 Piece(s)	487407

INFO

Also order the SEC connector → *from page 176*.

6.2.2 Flush-encased gearbox

Flush-encased gearbox without blocking device

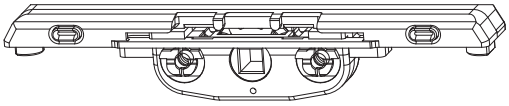

Flush-encased gearbox without blocking device	24 mm	Coupling point, 10 mm	10 Piece(s)	378338

Flush-encased gearbox with blocking device

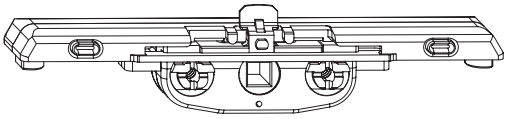

Flush-encased gearbox with blocking device	24 mm	Coupling point, 10 mm	10 Piece(s)	378337

SEC flush-encased gearbox without blocking device

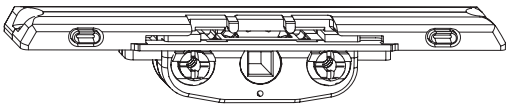

SEC flush-encased gearbox AL without blocking device	24 mm	Coupling point, 10 mm	10 Piece(s)	457210

INFO
Also order the SEC connector → *from page 176*.

SEC rebate-clearance reduction ESP

for SEC flush-encased gearbox

SEC rebate-clearance reduction ESP	For Roto Line lock. handles	50 Piece(s)	334360

SEC drilling protection

for SEC flush-encased gearbox

SEC drilling protection	For Roto Line lock. handles	10 Piece(s)	487406

6.2.3 Floating-mullion espagnolette

[59] Toggle lever, compl.

for FM-SuN

Toggle lever, compl.	100 Piece(s)	379013

[60] Guide rail, compl.

for FM-SuN

Guide rail, compl.	10 Piece(s)	634348

6.3 Accessories

6.3.1 Connecting rods

Connecting rod fixed dimensions

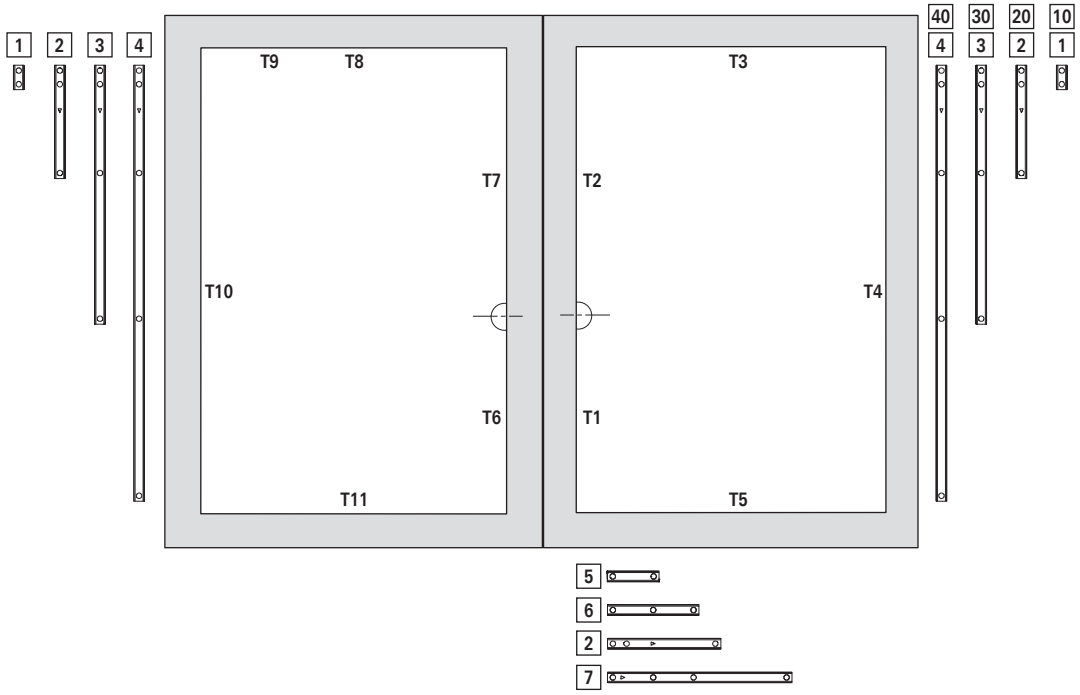

[1] L0
[2] L3 [12]
[3] L5
[4] L6
[5] L1
[6] L2
[7] L4
[10] L7
[20] L8
[30] L9
[40] L10

On the hinge side (CR4 / CR10)

SH	T&T			TF / TiSs	T-O			TiSt	Floating mullion
	80 kg	150 kg	180 kg	150 kg	80 kg[13]	150 kg	180 kg[14]	100 kg	150 kg
≤ 1300	L0	L0	L0	L0	L7	–	L0	–	L0 (2x)
1301 – 1800	L3	L3	L3	L3	L8	–	L3	–	L3 (2x)
1801 – 2400	L5	L5	L5	L5	L9	–	L5	–	L5 (2x)
> 2400	–	L6	L6	L6	L10	–	L6	–	L6 (2x)

Horizontal at the bottom (CR5)

SW	T&T			TF / TiSs	T-O			TiSt	Floating mullion
	80 kg	150 kg	180 kg	150 kg	80 kg	150 kg	180 kg	100 kg	150 kg
≤ 1300	–	–	L2	L1	–	–	–	–	–
> 1300	–	L3	L4	L4	–	L4	L4	–	–

					№
L0	45	–	555 – 1300	10 Piece(s)	729978
L3	61	–	520 – 1300	10 Piece(s)	781770
L3	536	–	1301 – 1800	10 Piece(s)	729979
L3	552	–	1301 – 1800	10 Piece(s)	781771
L5	1206	–	1801 – 2400	10 Piece(s)	729980
L3	1222	–	1801 – 2400	10 Piece(s)	781772
L6	1876	–	2401 – 3000	10 Piece(s)	729981
L3	1892	–	2401 – 3000	10 Piece(s)	781773

[12] Can also be used for SW 1301 - 1600.

[13] Couplable with rebate sash stay

[14] With sash stay 735

					№
L1	95	405 – 1300	–	10 Piece(s)	729982
L2	170	735 – 1300	–	10 Piece(s)	772751
L4	606	1301 – 1600	–	10 Piece(s)	769015

INFO
All other connecting rod lengths can be found in the corresponding installation drawings → *from page 273*.

Connecting rods (yard goods, also for ECC-groove)

			№
3 m connecting rod	ECC-groove	1 Piece(s)	735102
6 m connecting rod	ECC-groove	1 Piece(s)	334665

Roto Clip

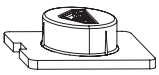

		№
Roto Clip for free holes in connecting rods	100 Piece(s)	331288

6.3.2 SEC connector

for SEC CL corner drive, SEC espagnolette protection, SEC flush-encased gearbox

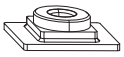

			№
SEC connector	For SEC flush-encased gearbox	100 Piece(s)	447113

6.3.3 SEC rebate-clearance reduction CD

for corner drive, on the locking side, top

		№
SEC rebate-clearance reduction CD	50 Piece(s)	447112

6.3.4 SEC coupler component

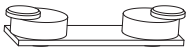

For connecting two connecting rods.

SEC coupler component	20 Piece(s)	348576

6.3.5 Reducing sleeve

Adapting mount Ø 6 mm to mount Ø 10 mm

Reducing sleeve from Ø 6 to Ø 10 mm	100 Piece(s)	334352

6.3.6 Screws

6.3.6.1 Countersunk screws

Countersunk screw ST4.8 x 16

For SEC rebate-clearance reduction CD / ESP

Countersunk screw	ST4,8x16	100 Piece(s)	728932

[17] Countersunk screw M5 x 7

for SEC corner drive CL

Countersunk screw	M5x7	100 Piece(s)	728928

[30] Countersunk screw M5 x 10

for SEC espagnolette protection

Countersunk screw	M5x10	100 Piece(s)	728926

Countersunk screw M5 x 30

for securing the handle in the flush-encased gearbox

Countersunk screw	M5x30	100 Piece(s)	212501

6.3.6.2 Cylinder screws

Cylinder screw M5 x 8

for SEC flush-encased gearbox

Cylinder screw	M5x8	100 Piece(s)	728936

[9] Cylinder screw M5 x 12

for T connector

Cylinder screw	M5x12	100 Piece(s)	728925

6.3.7 Roto NX / NT grease

Roto NX / NT grease	20 ml tube, white	1 Piece(s)	782881

7 Large packaging for sets

7.1 Locking components

7.1.1 Tilt-Only hardware

TiSt Tilt-Only stay arm set

for TiSt | 100 kg

V.01	20 Piece(s)	728862
V.02	20 Piece(s)	728863

Contents:

Figure	Quantity	Description
	1	[61] Tilt-Only stay arm, compl.
	1	[62] Slide bar, compl.

7.1.2 Floating-mullion hardware

[*] Multi-ported striker set

for FM-Su and FM-R

VB 1/2	20 Piece(s)	728912
VB 3/4	20 Piece(s)	728913
VB 5/6	20 Piece(s)	728914

Contents:

Figure	Quantity	Description
	1	[2a] Multi-ported striker bottom part
	1	[2b] Multi-ported striker top part

Coupler component set

Coupler component set	For coupling a connecting rod	100 Piece(s)	728856

Contents:

Figure	Quantity	Description
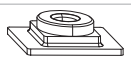	2	[16] SEC connector
	1	[67] SEC coupler component, plate
	2	[68] Washer
Not sh.	2	[69] Cylinder screw M5 x 6

7.2 Hinge side

7.2.1 Corner hinge set

With increased fixing

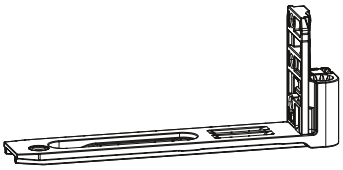

Adjustment piece with increased fixing for profile systems which feature embossing of the corner connector in the area of the fixing	Left	10 pieces	769855
	Right	10 pieces	769494

7.3 Espagnolette and connector

7.3.1 Flush-encased gearbox

[8a] SEC flush-encased gearbox set

SEC flush-encased gearbox set	10 Piece(s)	728947

Contents:

Figure	Quantity	Description
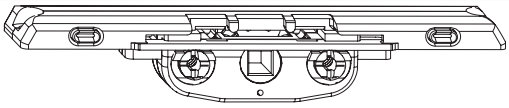	1	SEC flush-encased gearbox without blocking device
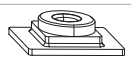	2	SEC connector
Not sh.	2	Cylinder-head screw M5 x 8
	1	SEC drilling protection
	1	SEC rebate-clearance reduction flush-encased gearbox
Not sh.	1	Countersunk screw ST4.8 x 16

7.3.2 Floating-mullion espagnolette

for FM, couplable

FM SEC espagnolette set

Can be used in RC tests depending on the profile.

INFO
Note the profile system assessment.

		№
FM SEC espagnolette set	1 Piece(s)	764284

Contents:

Figure	Quantity	Description
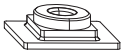	2	SEC connector
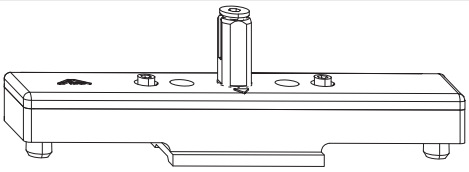	1	FM espagnolette, internal
	1	Operating lever, routed
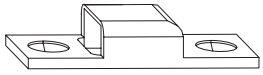	1	SEC locking
	2	Reducing sleeve
Not sh.	2	Countersunk screw M5 x 7

7.4 Accessories

7.4.1 Turn restrictor

Turn restrictor set, braked, damped

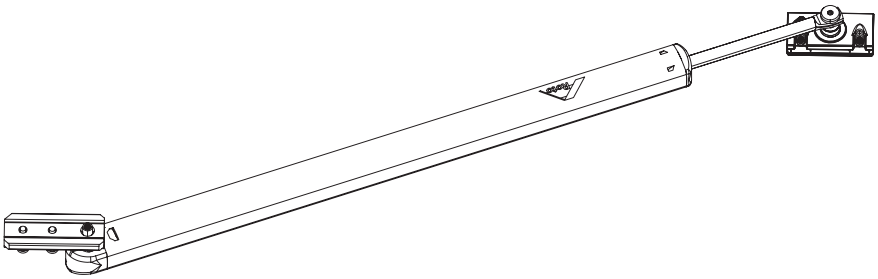

				№
Clampable	Size 1	V.01	10 Piece(s)	774487
		V.02	10 Piece(s)	774484
	Size 2	V.01	10 Piece(s)	774495
		V.02	10 Piece(s)	774496

Contents:

Figure	Quantity	Description
Not sh.	1	Turn restrictor, compl.
Not sh.	1	Mushroom-head thread
Not sh.	1	Frame bearing, compl.

7.4.2 Turn locks

Turn lock set

R01.1	Natural silver	20 Piece(s)	728815
R01.5	Silver	20 Piece(s)	728816
R05.4	Dark bronze	20 Piece(s)	728817
R07.1	Pure white	20 Piece(s)	728818
R07.2	Traffic white	20 Piece(s)	728819
SF	Special colour	20 Piece(s)	728820

Contents:

Figure	Quantity	Description
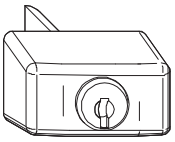	1	Turn lock, compl. with cylinder lock
	1	Key
Not sh.	2	Cylinder screw M5 x 12

Set of keys

Key set with ring	10 Piece(s)	208248

Contents:

Figure	Quantity	Description
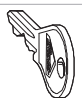	2	Key
Not sh.	1	Key ring

Locking plate set

Locking plate set	100 Piece(s)	728916

Contents:

Figure	Quantity	Description
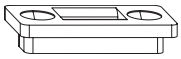	1	Locking plate
Not sh.	2	Countersunk screw ST4.8 x 16

Upgrade set

for turn lock

Upgrade set for turn lock	10 Piece(s)	684284

Contents:

Figure	Quantity	Description
	1	Locking plate
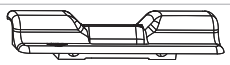	1	Multi-ported striker, compl.

7.4.3 Bullet catch

Bullet-catch set

for floating-mullion elements, second opening sash

Bullet catch set	10 Piece(s)	728924

Contents:

Figure	Quantity	Description
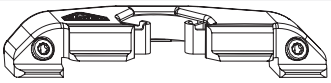	1	Bullet catch, compl.
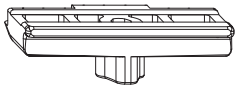	1	Bullet-catch cam, compl.

Balcony door bullet catch set

Balcony door bullet catch set	10 Piece(s)	728714

Contents:

Figure	Quantity	Description
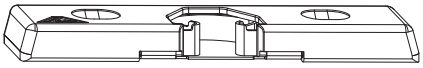	1	Balcony door bullet catch
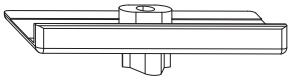	1	Balcony door bullet-catch cam
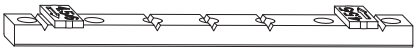	1	Packer
Not sh.	3	Self-tapping screw ST3.9 x 25
Not sh.	1	Installation instructions

7.4.4 Night vent

Night-vent set

Night vent set	10 Piece(s)	728958

Contents:

Figure	Quantity	Description
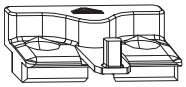	1	Night vent
	1	Night vent locking cam
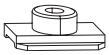	1	Coupler component
Not sh.	1	Countersunk screw M5 x 10
Not sh.	2	Self-tapping screw ST3.9 x 25

Night-vent set for T&T additional stay arm | 130 kg

Night vent set for T&T additional stay arm 130 kg	10 Piece(s)	810364

Contents:

Figure	Quantity	Description
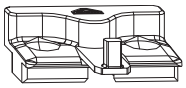	1	Night vent
	1	Night vent locking cam
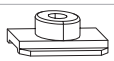	1	Coupler component
	1	Connecting rod
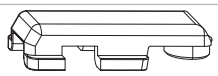	1	Additional stay arm coupler component
Not sh.	1	Countersunk screw M5 x 10
Not sh.	2	Self-tapping screw ST3.9 x 25

7.4.5 Screws

7.4.5.1 Rivet nut set

Application range: thread engagement ≤ 6 mm

		№
Rivet nut set, metric	10 Piece(s)	793407

Contents:

Figure	Quantity	Description
	1	Rivet nut M5 x 12
Not sh.	1	Countersunk screw M5 x 16

8 Installation

8.1 Processing instructions

Maximum sash sizes and weights

The specifications, application diagrams and component assignments which can be found in the hardware manufacturer's product-specific documents provide information on the maximum permitted sash sizes and weights. The component with the lowest permitted load bearing capacity determines the maximum permitted sash weight.

- Before using electronic data records and implementing them in window fabrication programs in particular, check that they match the specifications, application diagrams and component assignments.
- Never exceed the maximum permitted sash sizes and weights. If any points are unclear, contact the hardware manufacturer.

Specifications from profile manufacturers

The element manufacturer must comply with all specified system dimensions (e.g. gasket gap dimensions or locking distances).

They must continue to ensure and check this on a regular basis, especially when new hardware components are used for the first time, during production and on a continuous basis, up to and including element installation.

INFO
The hardware components are always designed in such a way that any system dimensions affected by the hardware can be adjusted. The hardware manufacturer shall not be liable for any additional expenses incurred if a deviation from these dimensions is not discovered until after the element has been installed.

Combining hardware

Burglar inhibiting elements need hardware which meets special requirements.

Elements for wet rooms and those for use in environments with aggressive, corrosive constituents in the air require hardware that meets special requirements.

The resistance of elements to wind loads when they are closed and locked depends on the individual design of the element. The hardware system is capable of handling wind loads specified by legislation and standards (for example in accordance with EN 12210 – especially test pressure P3).

Coordinate suitable hardware combinations and installation procedures in elements with the hardware manufacturer and profile manufacturer for the areas listed above, and conclude a separate agreement for them.

INFO
The hardware manufacturer's specifications on the combination of hardware (e.g. the use of additional scissor stays, the design of hardware for burglar-inhibiting elements, etc.) are binding.

In general, the hardware defined in this document is capable of meeting statutory and normative requirements for accessible dwellings.

8.2 Screw connections

DANGER
Incorrectly installed or screwed-in hardware components present a risk of death.
Incorrectly installed and screwed-in hardware components may lead to hazardous situations and cause serious or fatal accidents.

- During installation and screwdriving work, observe the specifications provided by the profile manufacturer; contact the profile manufacturer if necessary.
- Use the recommended screws.
- Select the length of the screws according to the profiles used.
- Ensure that the hardware components are adequately secured; contact the screw manufacturer if necessary.

ATTENTION

Using incorrect screw material may cause property damage.

Using the wrong screws may damage the components.

- Only use galvanised zinc-plated and passivated steel screws.
- Use screws with additional sealing in more challenging climatic conditions.
- Use stainless-steel screws on stainless-steel components only.
- For aluminium components, use screws made of steel (coated with zinc-nickel or zinc flakes) or stainless steel.

ATTENTION

Improper screw fixings may cause property damage.

Improper screw fixings may damage the components and the element as a whole, and stop them from working properly.

- Unless stated otherwise, turn screws in straight.
- Tighten screw heads until they are flush with the surface.
- Do not over-tighten screws. Note the torque. Choose a torque that will not deform the hardware and profile. Define profile-specific torques on the basis of the demo assembly.
- Use the recommended screws.
- Select the length of the screws according to the profiles used.

Fasten hardware components with the screws supplied. Observe the screwdriving specifications while doing so → *from page 188*.

8.2.1 Screw fixing specifications for aluminium profiles

WARNING

Incorrect screw connections may pose a risk of death!

Hardware components can be pulled out of the profile if they are not screwed down correctly.

- Select the length of the screws so that they will hold in the aluminium profile.

  If necessary, insert additional aluminium profiles or use rivet nuts.

INFO

Without examining the corner connectors used, Roto is unable to make any statements about the suitable fastening options.

Components	Components	Size	Quantity	d_k	Diameter to be drilled	Drive
SEC striker for tilt ventilation	Tamper-proof screw	M5 x ...	2	–	–	–
TiltSafe tilt striker	Countersunk-head screw	M5 x ...	1	–	–	–
CL sash component	Threaded pin	–	–	–	–	T10
Tilt-Only stay arm slide bar						
CL frame component						

The type and quality of the screw fixing always depend on the aluminium profile used by the profile manufacturer and must be inspected before use (system assessment).

Other AL hardware components are usually fastened to the frame and sash by clamping. Specific tightening torques apply during installation. Please note the relevant information on this in the chapter entitled “Installation”.

Screw fixings with piercing screws

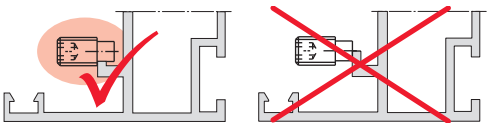

Tamper-proof screws

A preliminary system assessment is required to ensure that the components are sufficiently secured in the profile.

8.3 Preparing for installation

8.3.1 Preparing the connecting rods

Cropping

INFO

All connecting rod dimensions refer to an overlap width of 22 mm.

If the overlap width differs from this, adapt the connecting rod dimensions accordingly.

All connecting rod dimensions T ±0.5 mm.

1. For the length of the connecting rods, see the installation drawing. → *from page 273*
2. Mark the length on the connecting rods.
3. Crop the connecting rods.

Drilling / punching

General dimensioning of all coupling points (except for the floating mullion), unless otherwise specified.

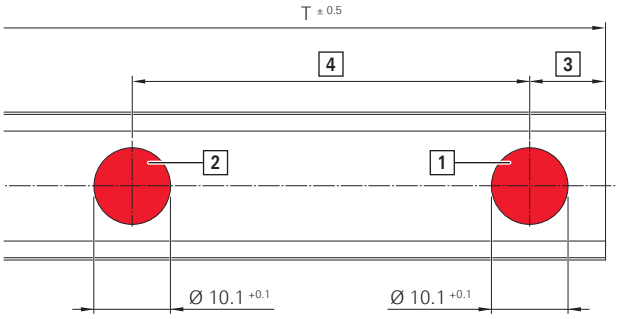

Position	Description
[1]	Drill hole for coupling point of various components / cam
[2]	Drill hole for cam / TF tilt lock bolt
[3]	Distance dimension from outside = 10 mm Except for CR4 and CR5 with RC 3: 50 mm
[4]	Distance dimension to the next cam / TF tilt lock bolt

Dimensioning of the floating-mullion espagnolette coupling points (except for FM-SuN), unless otherwise specified.

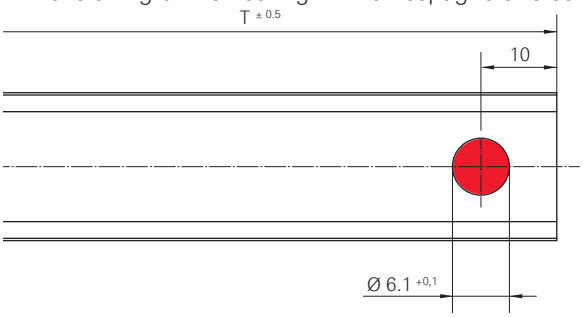

Dimensioning of the FM-SuN espagnolette coupling points, unless otherwise specified.

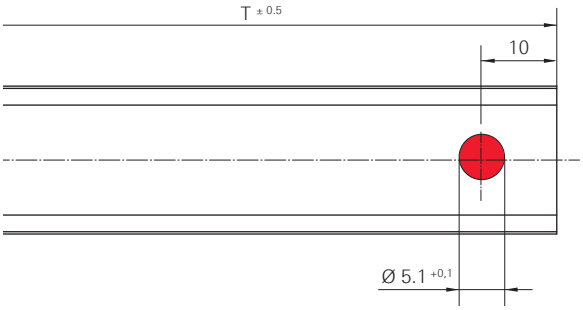

INFO
Connecting rods from the Roto product range cannot be used. Narrower connecting rods are required.

1. For the position of the coupling points, cams and TF tilt lock bolt in connecting rods, see the installation drawing.
   → *from page 273*

2. Drill holes.

8.3.2 Opening the sash corners

1. Open the connecting rod groove at all sash corners.

Position	Description
[1]	Connecting rod groove opening
[2]	Alternative connecting rod groove opening not possible.

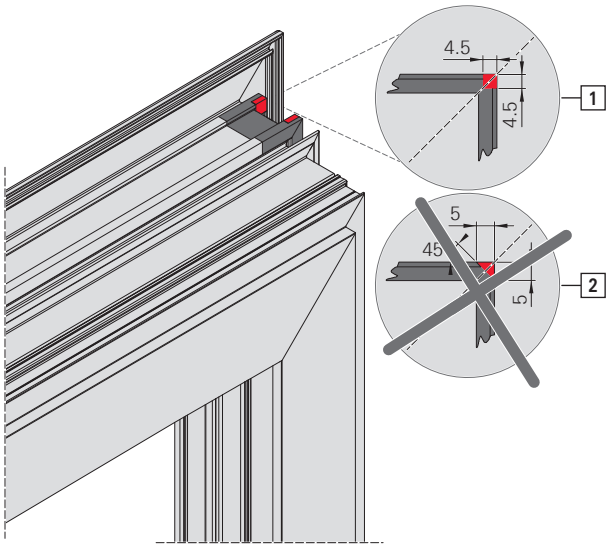

2. Deburr the edges.

8.3.3 CL corner drive – ECC-groove

Placing supports under the CL corner drive – ECC-groove

1. When the CL corner drive is used in a profile with extended connecting rod groove (ECC), use a profile-related (X) bracket as a support [1].

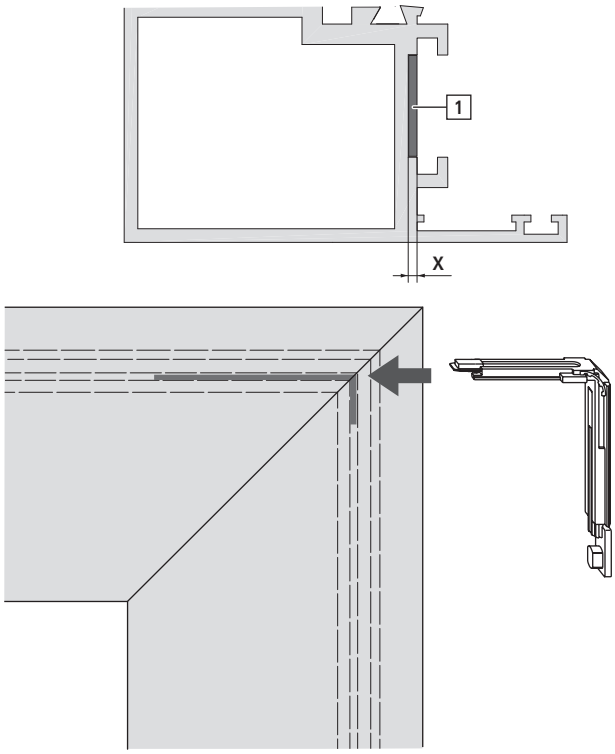

8.3.4 Connecting the coupling points

INFO
Prepared connecting rods always have coupling points.

Connecting the corner drive to the connecting rod

1. Connect the corner drive [1] at the coupling point on the connecting rod [2].

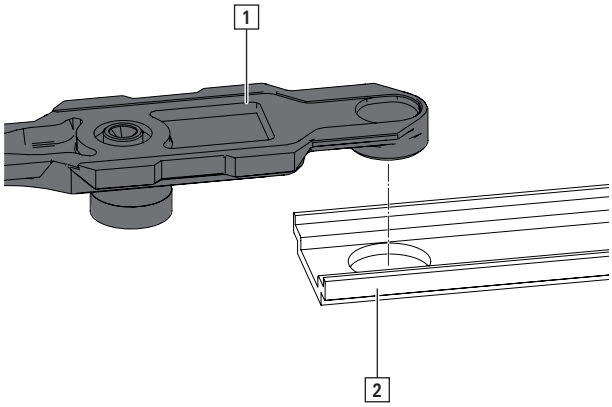

Connecting the connecting rods with the coupler component set

1. Insert the SEC connectors [1] into the connecting rods [2] at the coupling point.
   Connect the SEC connectors to the plate [3].
   Fit one washer [4] per SEC connector.
   Fasten the SEC connectors with one cylinder screw [5] each.
   Tool: T25 hexalobular socket
   Torque: 1.5 – 2.0 Nm

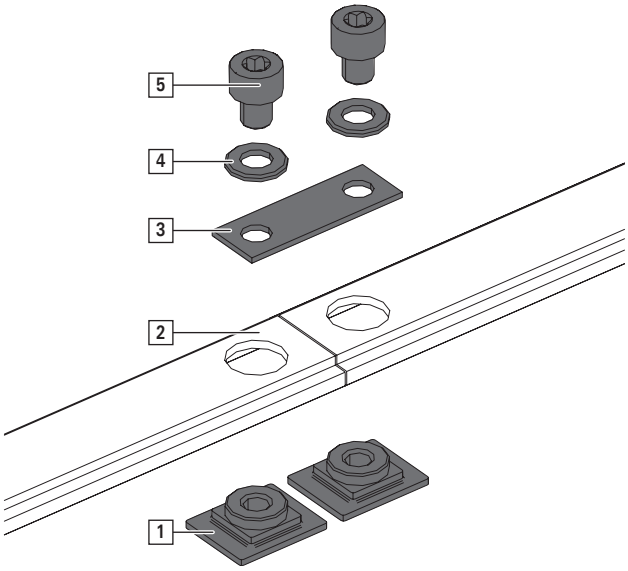

Connecting the connecting rods with the SEC coupler component

1. Use the SEC coupler component [1] at the coupling point on a connecting rod [2].

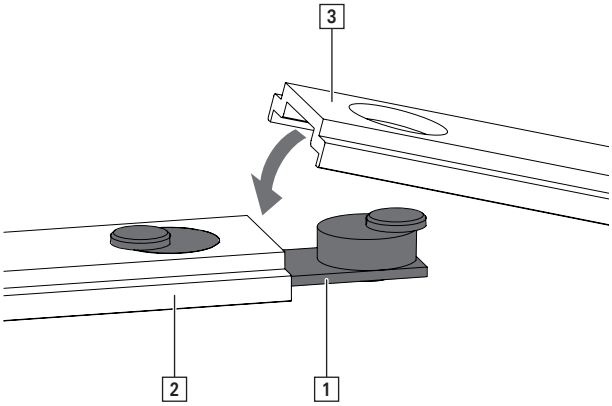

2. Connect the unit to another connecting rod [3] at the coupling point.

8.4 General installation

8.4.1 Drilling and routing dimensions

8.4.1.1 Sash stay 390

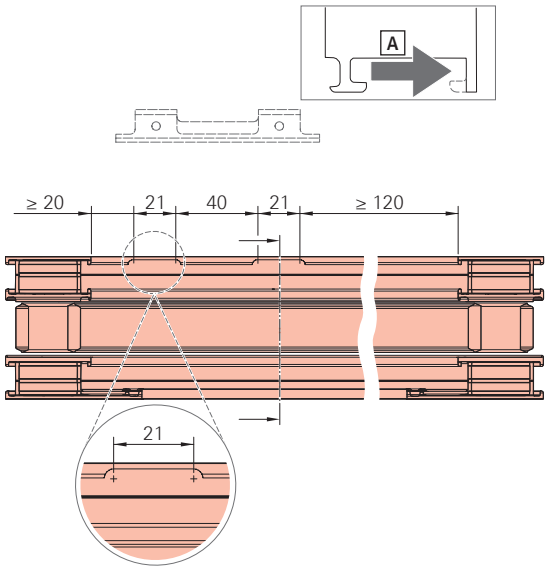

Open the frame profile by 21 mm to insert the sash stay clamp strip. Route the profile strut so that it is flat [A].

INFO
Do not perform routing work if the clamp strip for sash stay 390 has already been placed in the frame.

8.4.1.2 Pivot rest / stay bearing

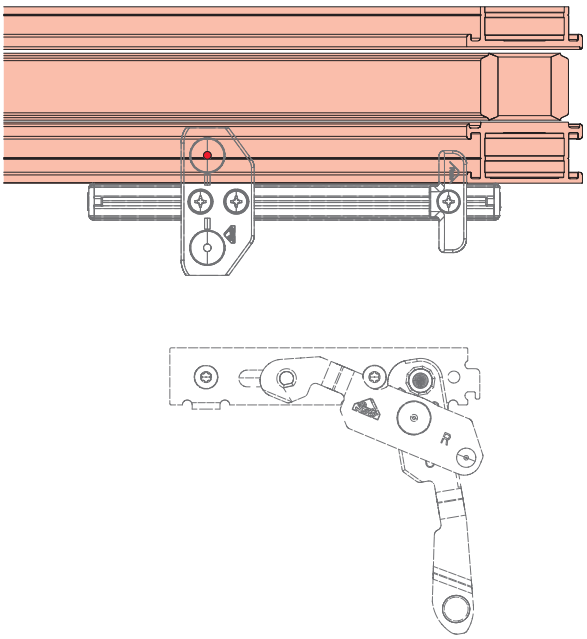

Place the drilling jig on the frame as shown in the drawing.

Drill holes:

1 x Ø 2.5 mm, at least 4 mm deep.

INFO
Drill holes if:

- The punched hole produced by the screw is not sufficient.
- The base of the groove is too thick (> 2 mm).

Alternative (for mechanical production):

Drill the hole according to the drawing.

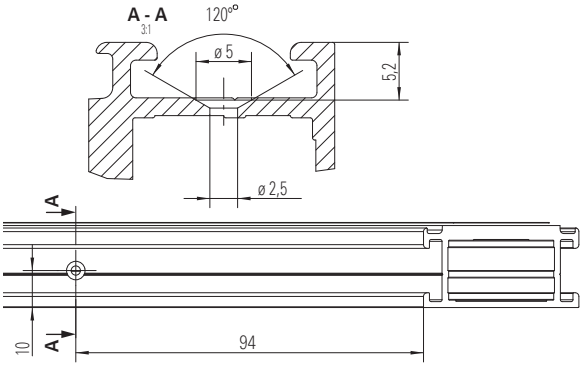

8.4.2 Sash

8.4.2.1 Installation sequence

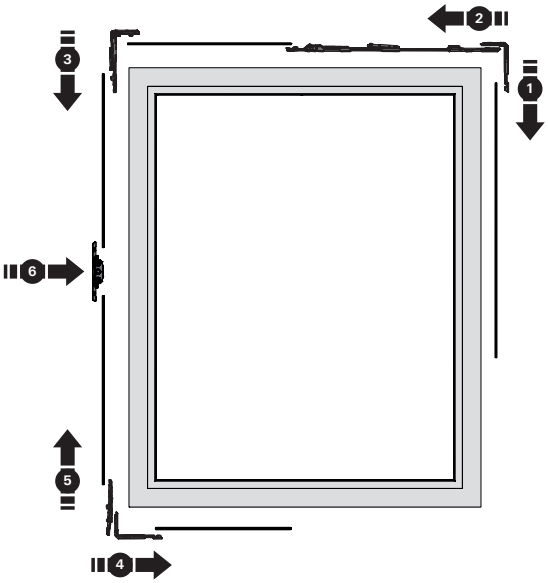

[1] Connecting rod on the hinge side
[2] Horizontal top connecting rods and components
[3] Top connecting rods and components on the locking side
[4] Horizontal bottom connecting rod and components
[5] Bottom connecting rods and components on the locking side

[6] Espagnolette on the locking side

Observing the installation sequence

1. Open the sash corners .
2. Crop and drill the connecting rods → *from page 189*.
3. Install the insertable cam → *from page 199*.
4. Install the connecting rod on the hinge side .
5. Install the horizontal top connecting rods and components .
6. Install the connecting rods and espagnolette on the locking side .
7. Install the horizontal bottom connecting rod and components .
8. Install the handle → *from page 263*.

8.4.2.2 T connector

Installing the T connector

1. When using the centre lock, break the lower horizontal T connector in the centre and insert it from above or below.

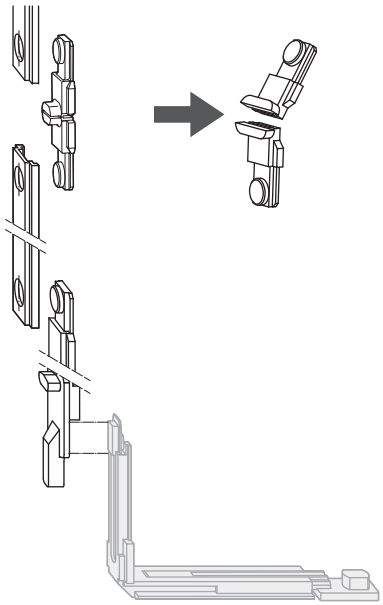

8.4.2.3 Connector bolt, insertable

for Roto Line AL geared-handle

Installing the connector bolt, insertable

INFO
Comply with the installation sequence for the aluminium sash.

1. For the position of the connector bolt, see the installation drawings → *from page 273*.

2. Connecting the corner drive to the connecting rod at the coupling point → *from page 201*
   Install the cam → *from page 199*.

3. Insert the connector bolt [1] into the continuous connecting rod.

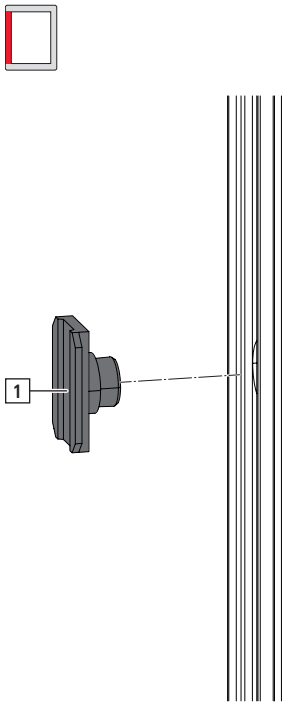

4. Insert everything jointly into the connecting rod groove from above on the locking side.

5. Fix the corner drive to the sash using the retaining fork → *from page 201*.

8.4.2.4 SEC espagnolette protection

for Roto Line AL lockable geared-handle

Installing the SEC espagnolette protection

⇨ The Roto Line AL geared-handle, lockable, is installed → *from page 263*.

INFO
Comply with the installation sequence for the aluminium sash.

1. For the position of the SEC espagnolette protection, see the installation drawings → *from page 273*.

2. Install the Roto Line AL geared-handle, lockable, with espagnolette support → *from page 263*.

INFO
It is not possible to install the espagnolette support at a later point.

3. Screw down the SEC espagnolette protection onto the connecting rods as follows.

a. Insert the corner drive with connecting rod [1], SEC connector [2] and cam into the connecting rod groove from above on the locking side.
b. Insert the connecting rod [3], SEC connector [2] and cam into the connecting rod groove from below on the locking side.
c. Swing the SEC espagnolette protection [4] into the connecting rod groove on the locking side.
d. Fasten the SEC espagnolette protection on the connecting rods to the SEC connectors using screws.

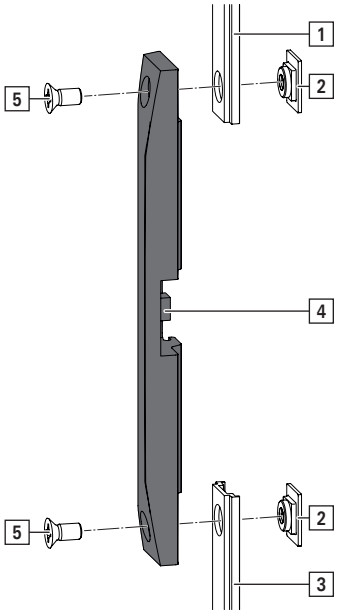

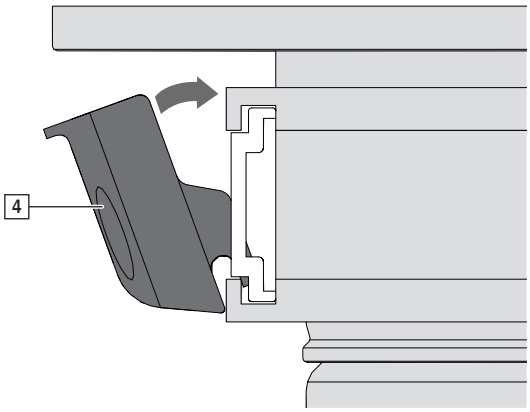

4. Fix the corner drive to the sash using the retaining fork → *from page 201*.

8.4.2.5 Flush-encased gearbox

Installing the flush-encased gearbox

1. For the position of the flush-encased gearbox, see the installation drawings. → *from page 273*

2. Place the flush-encased gearbox in the delivery state in the routing provided as shown.

INFO
Turn the clampable lug to secure the flush-encased gearbox for transport.

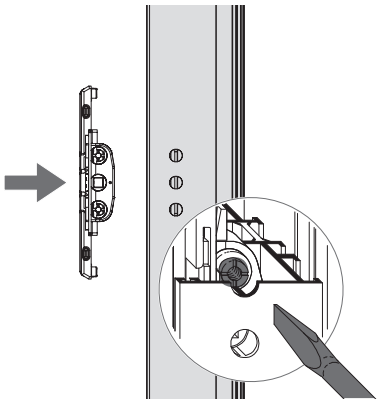

8.4.2.6 Cam, insertable

Installing the cam, insertable

INFO
Comply with the installation sequence for the aluminium sash.

1. For the number and position of cams, see the installation drawings. → *from page 273*

2. Insert the cam [1] into the connecting rod [2].

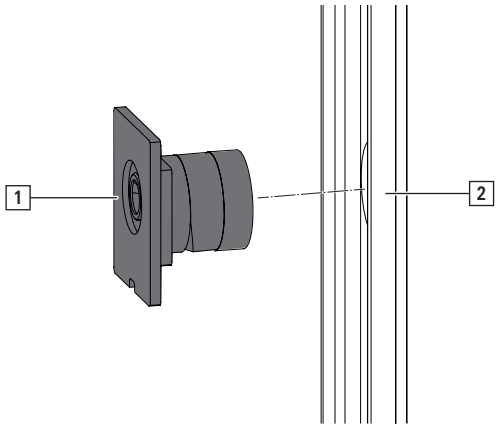

a. The recess [1] on the cam points away from the striker.

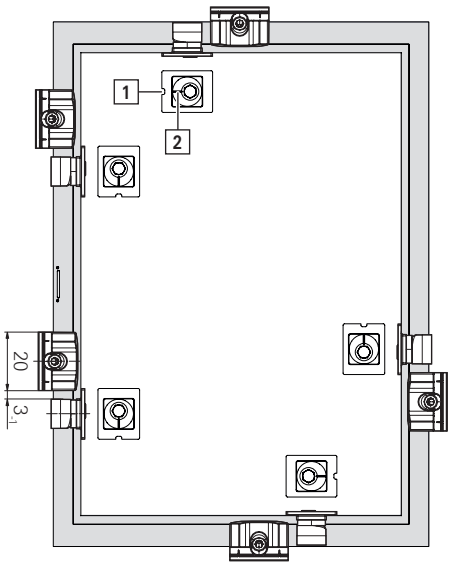

b. Adjust the marking [2] for adjusting the cam horizontally or vertically in relation to direction of travel.

   Note the type of connecting rod (standard / with extended connecting rod groove). → *10.1.1 "Cam, insertable" from page 316*

8.4.2.7 Cam, insertable – ECC-groove

Installing the cam, insertable – ECC-groove

INFO
Comply with the installation sequence for the aluminium sash.

1. For the number and position of cams, see the installation drawings. → *from page 273*

2. Insert the cam [1] into the connecting rod [2].

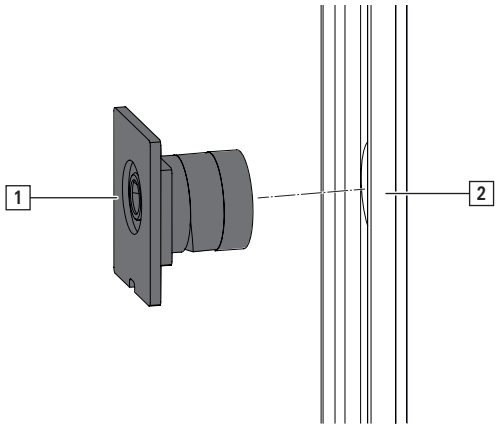

a. The recess [1] on the cam points towards the striker.

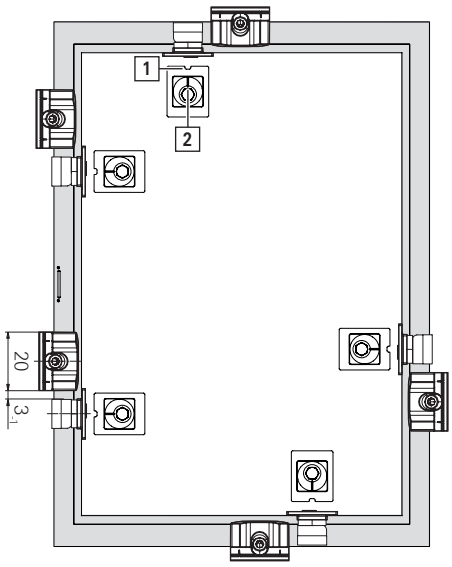

b. Adjust the marking [2] for adjusting the cam horizontally or vertically in relation to direction of travel.

   Note the type of connecting rod (standard / with extended connecting rod groove). → *10.1.1 "Cam, insertable" from page 316*

8.4.2.8 Corner drives

Installing the corner drives

⇨ Drill holes created in the handle → *from page 193*

⇨ Espagnolette cutout routed → *from page 193*

⇨ Sash corners opened

⇨ Connecting rods prepared → *from page 189*

⇨ Cam installed → *from page 199*

INFO
Comply with the installation sequence for the aluminium sash.

1. Connect the corner drive [1] to the connecting rod [2] and additional components at the coupling point.

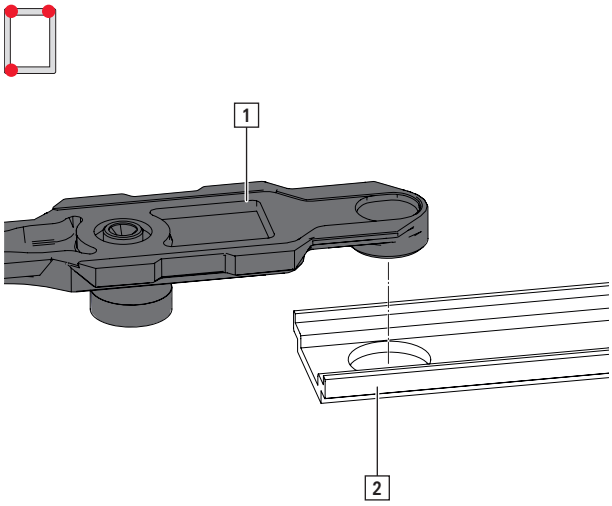

2. Insert everything jointly into the connecting rod groove.

3. Fix the corner drive to the sash using the retaining fork [1].

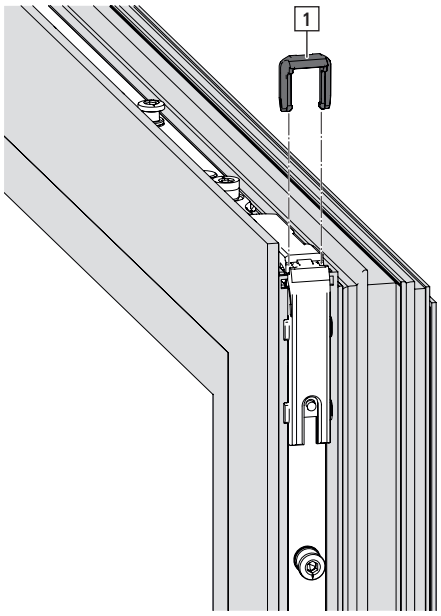

8.4.3 Frame

INFO
Install the frame components when the frame is horizontal (workshop).

Once the frame is fitted, the reveal may prevent frame components from being installed correctly.

8.4.3.1 Strikers

Position the strikers in accordance with the installation drawings or using positioning jigs → *from page 163*.

Striker positions in installation drawings correspond to cams in the turned, open position (T&T / T-O / FM) and tilted, open position (TF / TiS).

Test distance from (standard / SEC) striker to cam

- 3_{-1} mm in turned, open position (T&T[15] / T-O / FM) and tilted, open position (TiS)
- 20.5_{-1} mm in turned, open position (TF)

INFO
Check all dimensions during sample installation prior to series production.

Installing standard strikers

1. Determine the striker position.

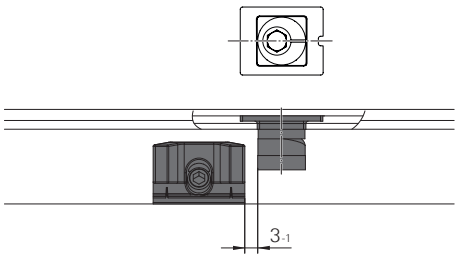

2. Fasten the striker with a preassembled threaded pin.

   Tool: T10 hexalobular socket

   Torque: 2 – 2.5 Nm

   Check that the striker is fitted securely.

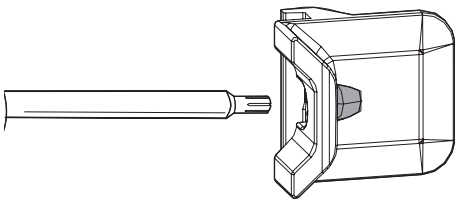

[15] T&T | accessible: align in the centre, see *Installing strikers (accessible)*

Installing standard strikers as centre locks

1. Place centre locks horizontally and vertically from SW or SH > 1300 mm.

   Depending on the profile stability and leaktightness requirements, the centre locks may have to be positioned at smaller sash widths and lower sash heights.

INFO
From 0.5 kN/m² wind load or SH > 1800 mm, place additional centre locks on the hinge side and locking side.

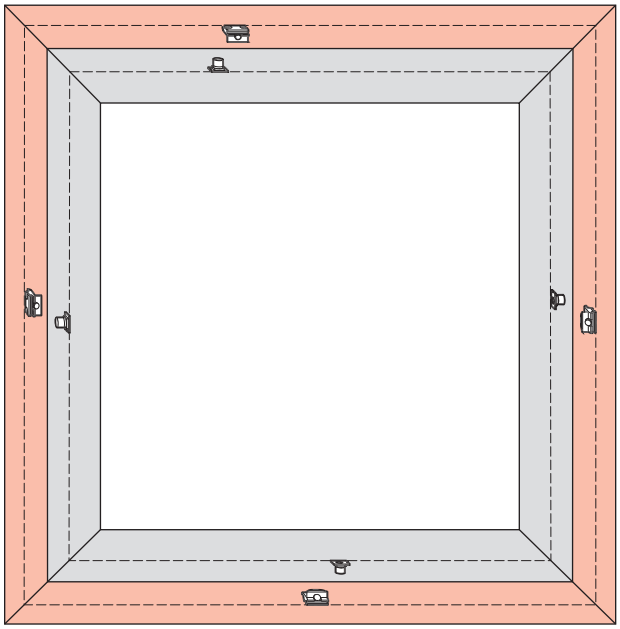

Installing SEC strikers

1. Determine the striker position.

INFO
Security locking points must not collide with standard locking points.

RC 2

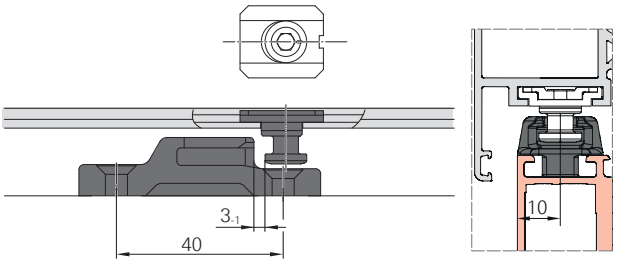

RC 3

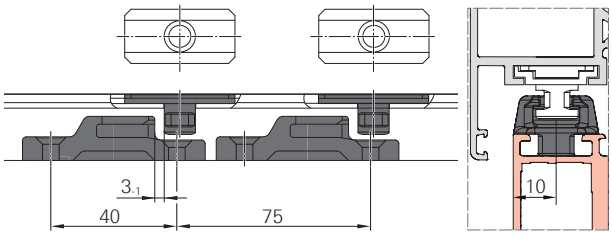

2. Fasten the SEC striker with two screws.

   Check that the striker is fitted securely.

INFO
It must be ensured that the SEC strikers are securely fitted (in accordance with RC classification) for security hardware.

Installing strikers (accessible)

1. Determine the striker position.
   Align the striker and cam in the centre.

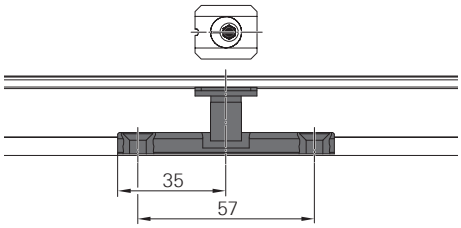

2. Fasten the striker with two screws.

INFO
Select screws on the basis of the threshold structure. Observe the specifications on selecting the screw head while doing so. Countersink the screw head completely.

Check that the striker is fitted securely.

8.5 Tilt&Turn / TiltFirst / Tilt-Only hardware, handle at the side

8.5.1 Sash

8.5.1.1 Sash stay 390 | SH ≤ 800 mm

Preassembling sash stay 390

1. Use a tilt distance restrictor for elements with SH ≤ 800 mm.

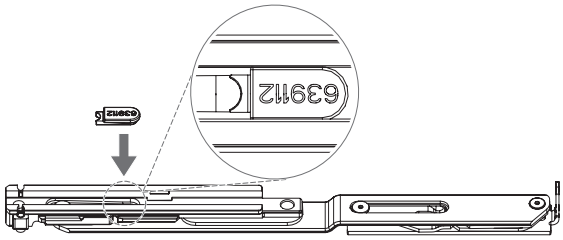

2. Crop and punch the coupling rod. Open the sash stay and insert the coupling rod at the height of the guide lugs [A].
   Insert the coupling rod as far as it will go [B].

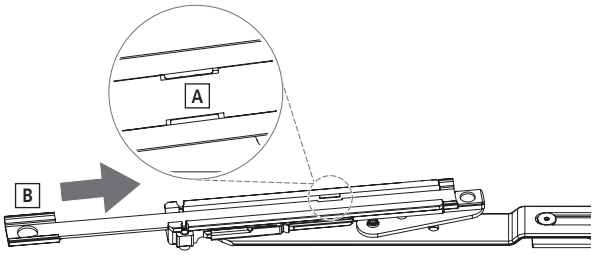

3. Insert the control component into the coupling rod as shown [C].

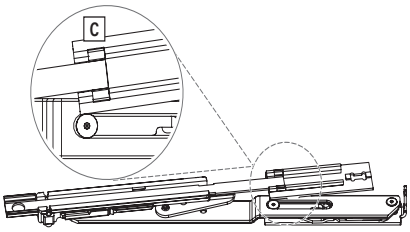

Installing sash stay 390

1. Insert connecting rod CR4 with components (according to the installation drawing) in the Euro-groove on the hinge side.

2. Link the CL corner drive to the sash stay and insert the entire assembly at the top, starting from the hinge side. Link connecting rod CR4 to the CL corner drive.

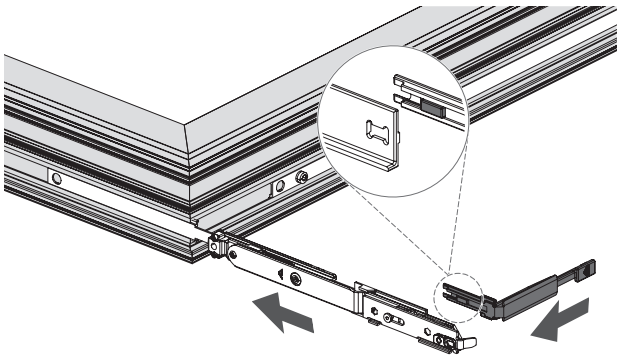

3. Slightly open the sash stay and secure the CL corner drive with the retaining fork.

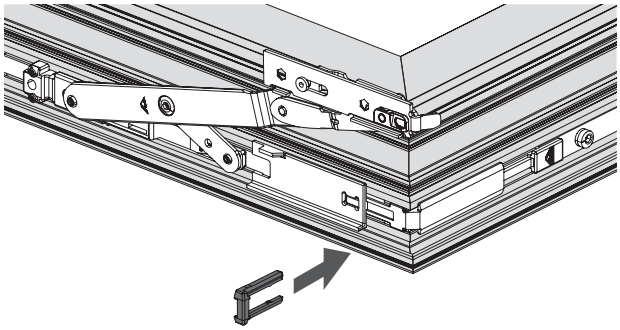

4. Prepare the jig for the sash stay by fitting the positioning pin in the corresponding drill hole.

   Sash stay 390 = AID. size 0

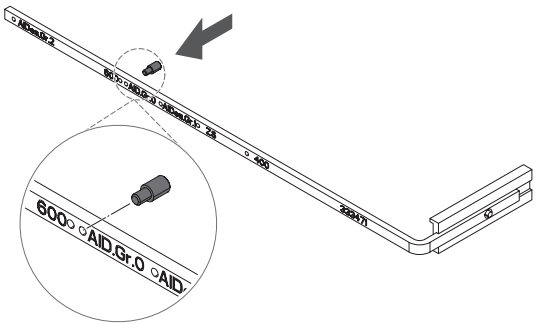

5. Position the jig on the Euro-groove so that it is level [A].

   Open the sash stay and insert the jig positioning pin into the sash stay hole provided [B].

   Fix the sash stay in position with two piercing screws [C].

   Tool: T10 hexalobular socket

   Torque: 2 – 2.5 Nm

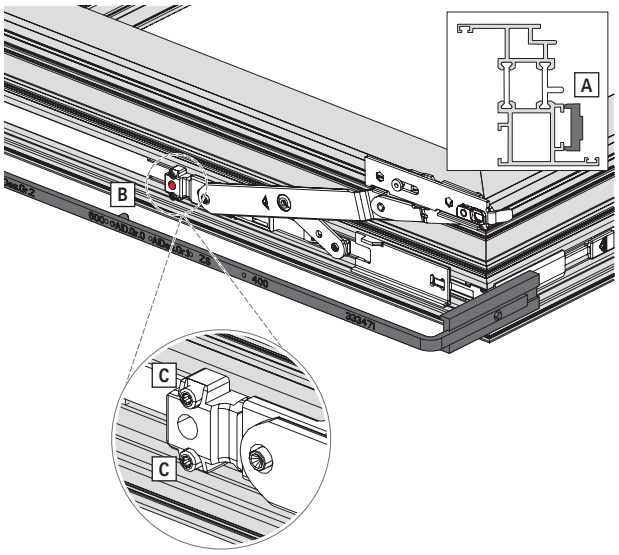

8.5.1.2 Tilt distance restrictor

For SH ≤ 800 mm or a reduced tilt distance

Installing the tilt distance restrictor in scissor stay guide 500

1. Remove the preassembled spring clip [1] from the scissor stay guide [2].

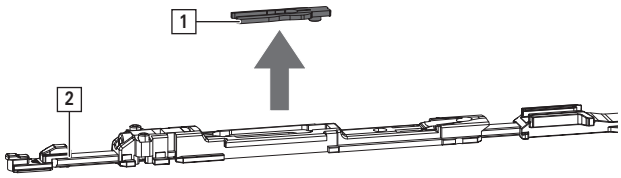

2. Insert the tilt distance restrictor [3] instead.

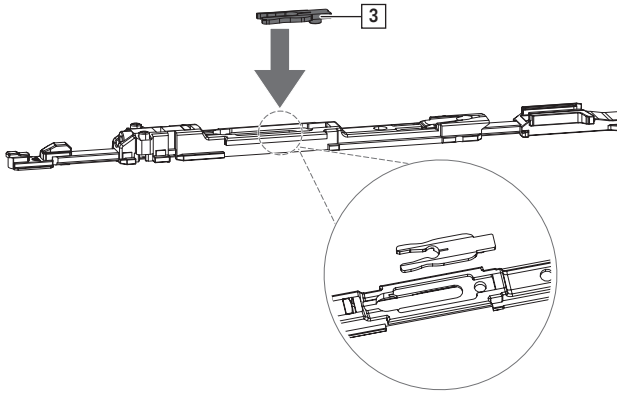

Installing the tilt distance restrictor in scissor stay guide 735

1. Crop the tilt distance restrictor according to the drawing.

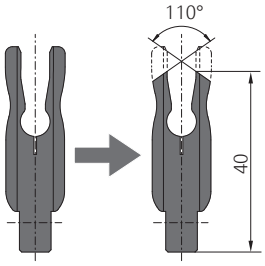

2. Lift the preassembled spring clip [1] with a slotted screwdriver and remove it.
   Insert the tilt distance restrictor [2].

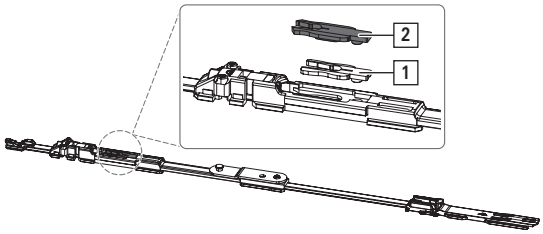

8.5.1.3 Scissor stay guide 500, 735

INFO
The installation of scissor stay guide 735 is shown here

Installing scissor stay guide 500, 735

⇨ Connecting rods CR3 and CR4 prepared (see installation drawing → *9 "Installation drawings" from page 273*).

1. For a profile with extended connecting rod groove (ECC), use a profile-related bracket [1] as a support.

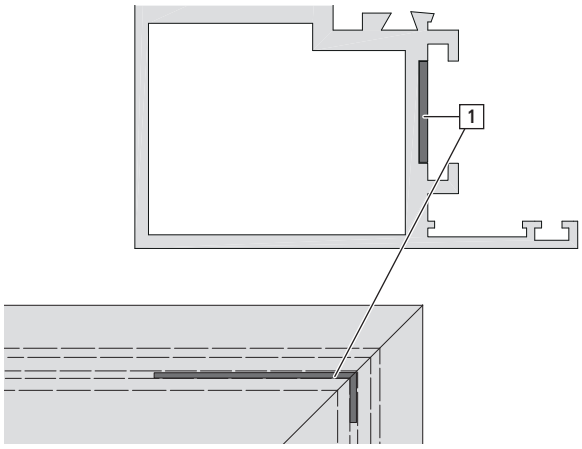

2. Insert connecting rod CR4 with components in the Euro-groove on the hinge side.

   Link connecting rod CR3 and the CL corner drive to the scissor stay guide and insert the entire assembly at the top, starting from the hinge side. Link connecting rod CR4 to the CL corner drive.

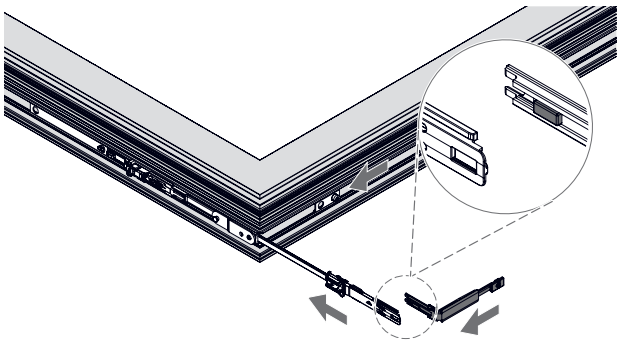

3. Secure the CL corner drive with the retaining fork.

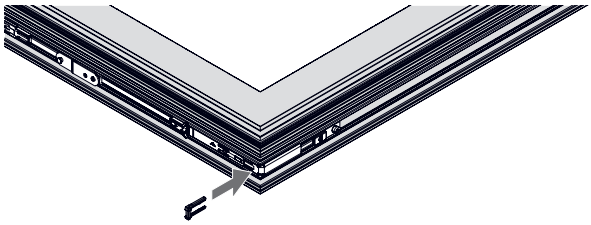

4. Prepare the jig for the scissor stay guide by inserting the positioning pin into the corresponding drill hole (depending on the scissor stay guide selected).

   Scissor stay guide 500 = AlDes. size 1

   Scissor stay guide 735 = AlDes. size 2

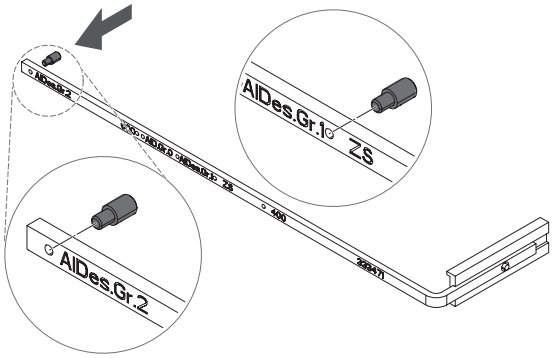

5. Position the jig on the Euro-groove so that it is level [A].

   Open the scissor stay guide link and insert the jig positioning pin into the drill hole provided [B].

   Secure the scissor stay guide in position with two piercing screws [C].

   Tool: T10 hexalobular socket

   Torque: 2 – 2.5 Nm

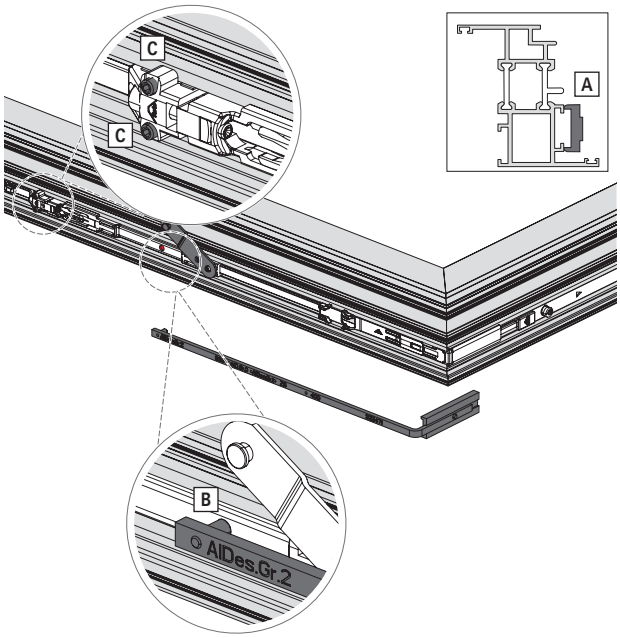

8.5.1.4 Additional stay arm | 150 kg

Installing the additional stay arm

1. Connect the scissor stay deadbolt [1] to the coupling rod [2].

   Insert the stop [3] into the scissor stay guide [4] as shown and place both on the coupling rod.

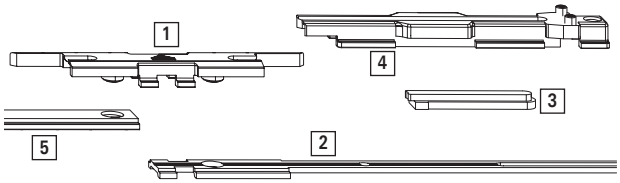

2. Connect the additional stay arm sash components to the connecting rod [5] and insert into the sash profile at the top, starting from the locking side.

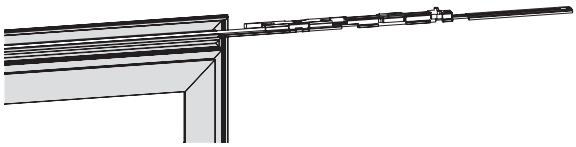

3. Connect the corner drive to the connecting rod and insert it from above into the sash groove on the locking side.

   Join with the coupling rod.

4. Fasten the scissor stay guide at the specified position (see installation drawing → *9 "Installation drawings" from page 273*) with two threaded pins [A].

   Tool: T10 hexalobular socket

   Torque: 2 – 2.5 Nm

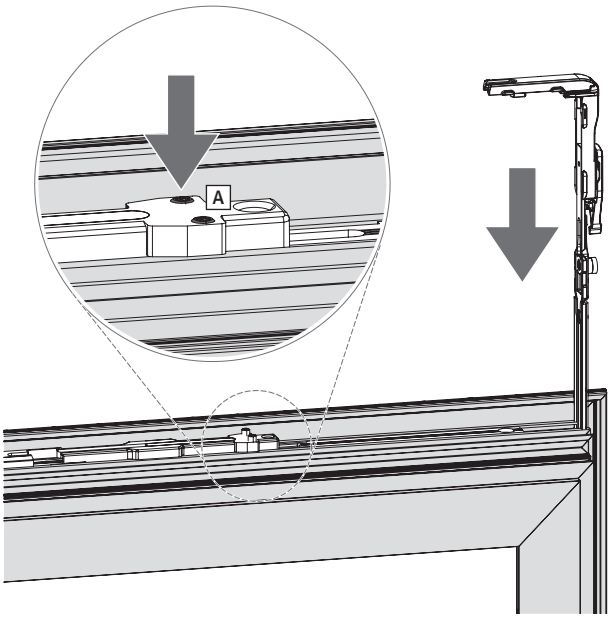

8.5.1.5 Additional stay arm | 180 kg

Installing the additional stay arm

1. Connect the scissor stay deadbolt [1] to the coupling rod [2].

   For a tilt distance of 160 mm: insert the stop [3] into the scissor stay guide [4] as shown.

   Position the scissor stay guide on the coupling rod.

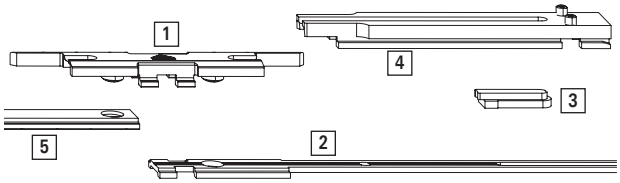

2. Connect the additional stay arm sash components to the connecting rod [5] and insert into the sash profile at the top, starting from the locking side.

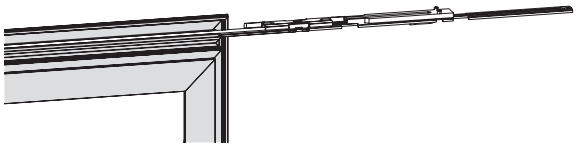

3. Connect the corner drive to the connecting rod and insert it from above into the sash groove on the locking side.

   Join with the coupling rod.

4. Fasten the scissor stay guide at the specified position (see installation drawing → *9 "Installation drawings" from page 273*) with two threaded pins [A].

   Tool: T10 hexalobular socket

   Torque: 2 – 2.5 Nm

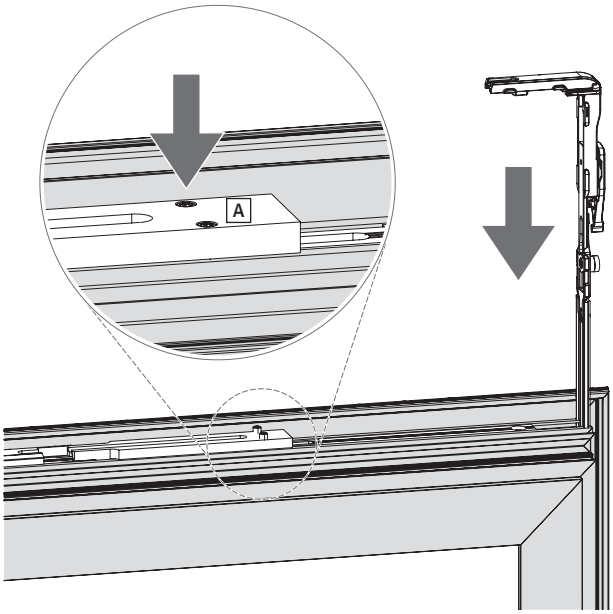

8.5.1.6 Corner hinge

INFO
The 180 kg adjustment piece does not feature lateral adjustment.

Installing the corner hinge

1. For a profile with extended connecting rod groove (ECC), use a profile-related bracket [1] as a support.

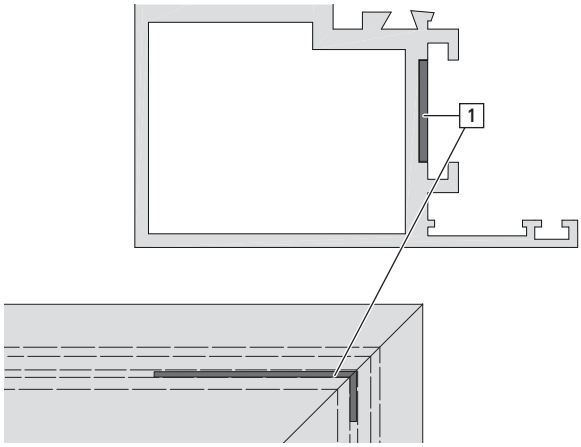

2. Insert the adjustment piece [1] into the connecting rod groove on the hinge side.
   Insert the corner hinge [2] into the connecting rod groove at the bottom.

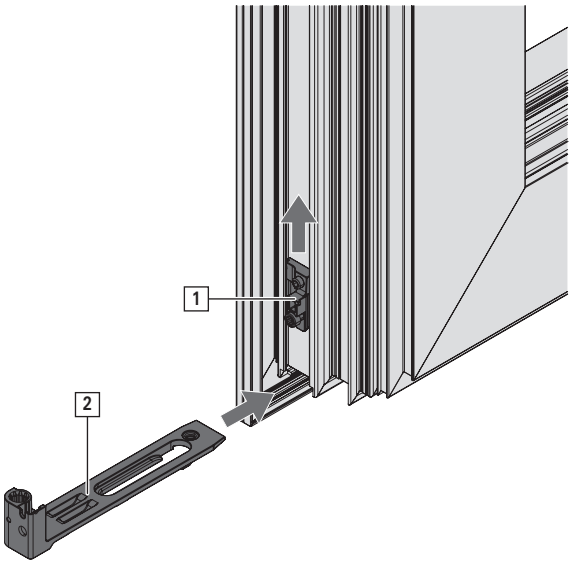

3. Push the adjustment piece into the corner hinge.

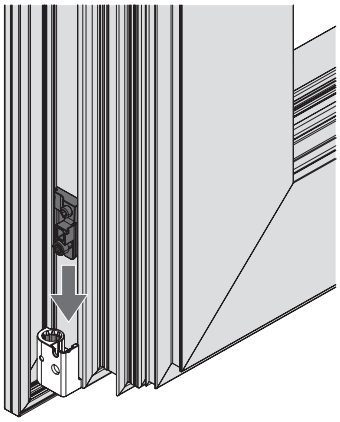

4. Secure the adjustment piece with a preassembled threaded pin.

   Tool: T10 hexalobular socket

   Torque: 2 – 2.5 Nm

   Check that the hinge is fitted securely.

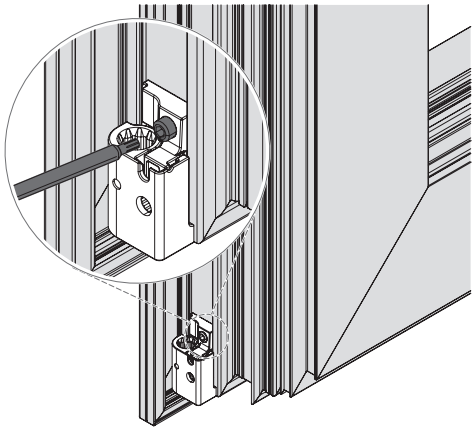

8.5.1.7 Locking sleeve

INFO
TiSs: only screw down the locking sleeve with the screw after the sash stay has been mounted.

Installing the locking sleeve

1. Produce the espagnolette lock by using a locking sleeve in the slot on connecting rod CR2.

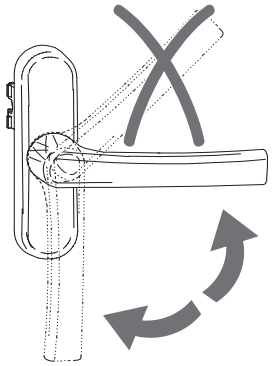

2. Produce the slot in connecting rod CR2 before installation [A].

INFO
X = freely positionable (suggestion: 60 mm)

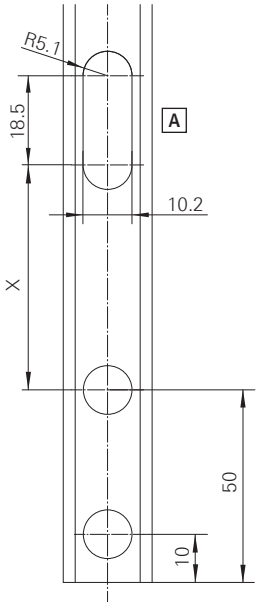

3. Drill out the sash in the 90° handle position [B] for locking sleeve with screw [C].
   Drill the hole:
   1 x Ø 3.5 mm; at least 4 mm deep.
   Fasten the locking sleeve [1] with the screw [2].
   Tool: T25 hexalobular socket
   Torque: 1.5 – 2.0 Nm

8.5.2 Frame

INFO
Install the frame components when the frame is horizontal (workshop).

Once the frame is fitted, the reveal may prevent frame components from being installed correctly.

8.5.2.1 Pivot rest

Installing the pivot rest

1. Align the clamping blocks.

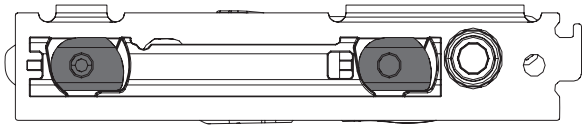

INFO
For selecting the clamp strip version depending on the clamp strip dimensions = C (profile leg thickness) + J (groove inside width), → *from page 39*.

2. Open the bearing and swing it into the profile so that the baseplate engages behind it.

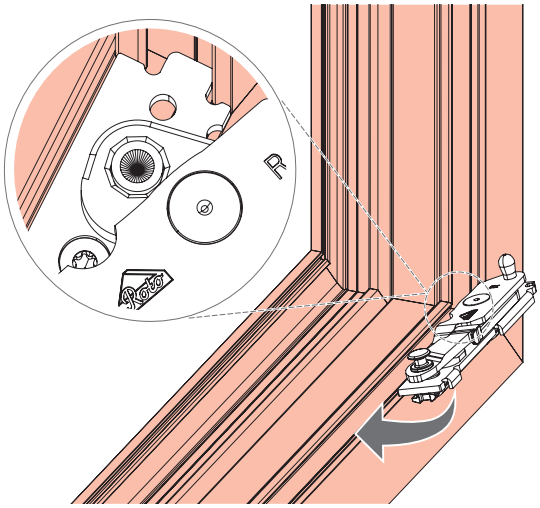

3. Push the baseplate onto the profile so that it is level and tighten the preassembled screw [1].

   Check that the bearing is fitted securely.

   Tighten the screw [2].

   Tool: T20 hexalobular socket

   Torque: 4.5 – 5.5 Nm

INFO

- Depending on the strength of the profile, or with a base groove thickness > 2 mm, it may be necessary to predrill the area of the screw [2]. To do so, use the pivot rest / stay bearing jig or create the corresponding drilling pattern in mechanical production (→ *from page 37*).
- Note the screw sequence [1], [2].
- Install and remove the bearing a maximum of two times.

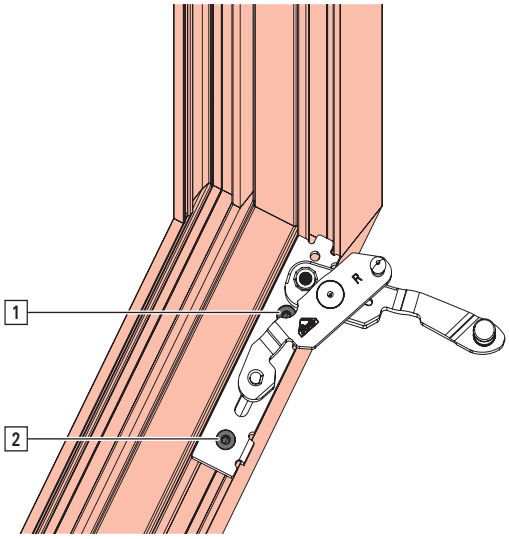

4. Close the bearing.

INFO

Do not leave a gap between the baseplate and profile [A].

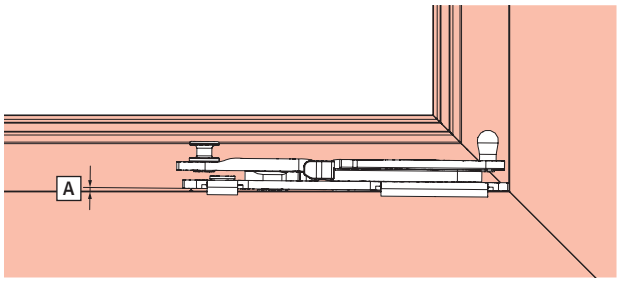

8.5.2.2 Sash stay 500, 735

Installing sash stay 500, 735

1. Align the clamping blocks.

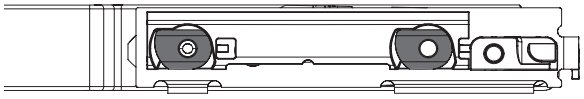

INFO
For selecting the clamp strip version depending on the clamp strip dimensions = C (profile leg thickness) + J (groove inside width), → *from page 39*.

2. Open the sash stay and swing the bearing into the profile so that the baseplate engages behind it.

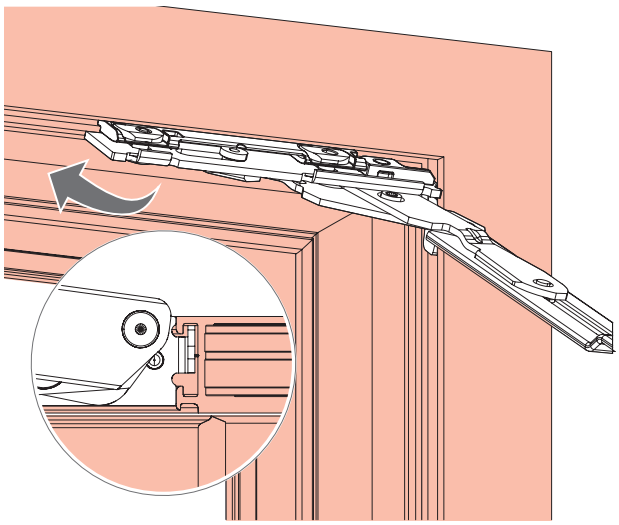

3. Push the baseplate onto the profile so that it is level and tighten the preassembled screw [1].
   Check that the sash stay is fitted securely.
   Tighten the screw [2].
   Tool: T20 hexalobular socket
   Torque: 4.5 – 5.5 Nm

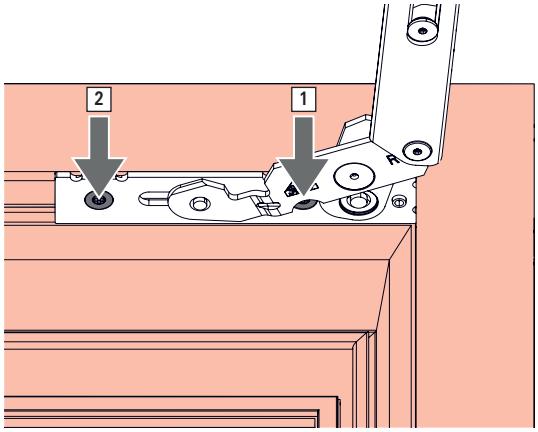

INFO
- Depending on the strength of the profile, or with a base groove thickness > 2 mm, it may be necessary to predrill the area of the screw [2]. To do so, use the pivot rest / stay bearing jig or create the corresponding drilling pattern in mechanical production (→ *from page 37*).
- Note the screw sequence [1], [2].
- Install and remove the sash stay a maximum of two times.

4. Close the sash stay.

INFO
Do not leave a gap between the baseplate and profile [A].

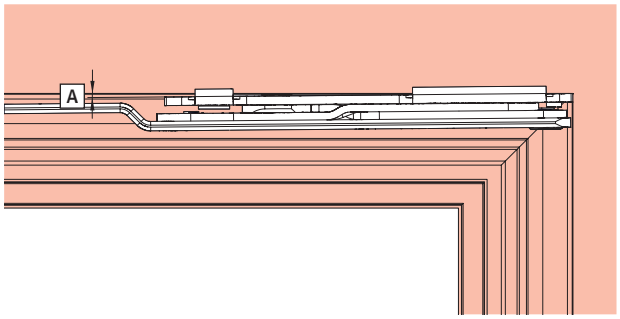

8.5.2.3 Clamp strip on sash stay 390

Installing the clamp strip on sash stay 390

1. Swing the clamp strip into the routing → *from page 193*. Prevent the clamp strip from falling out due to movement.

INFO
Ensure that the clamp strip is correctly aligned in the frame profile.

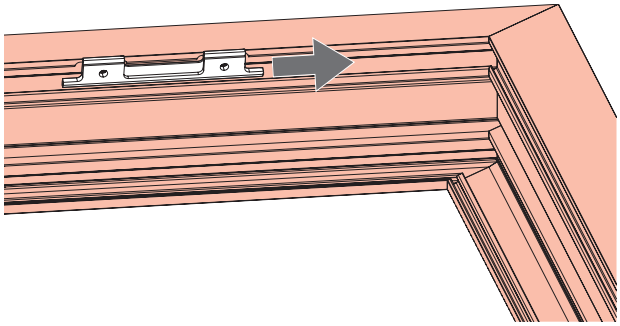

2. Alternatively: insert the clamp strip into the profile on the separate rod.

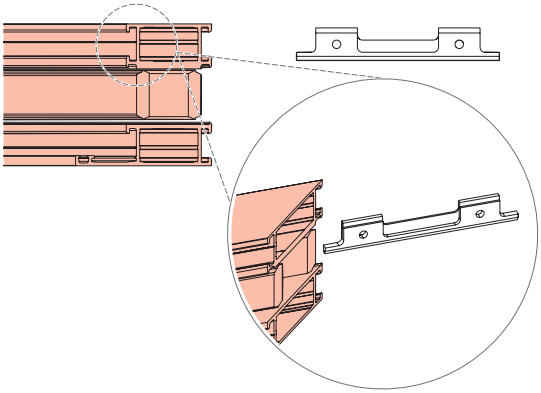

8.5.2.4 Additional stay arm frame components

Installing the additional stay arm

1. Swing the additional scissor stay arm, compl., into the frame at the specified position (see installation drawing → *9 "Installation drawings" from page 273*).

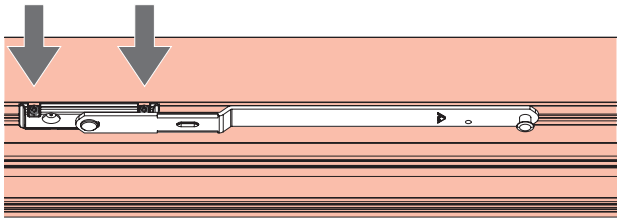

2. Fasten the bearing with two preassembled threaded pins.

   Tool: T10 hexalobular socket

Torque: 2 – 2.5 Nm

3. Open the additional scissor stay arm and position the retaining spring next to the bearing.

   Fasten the retaining spring with a preassembled threaded pin.

   Tool: T10 hexalobular socket

   Torque: 2 – 2.5 Nm

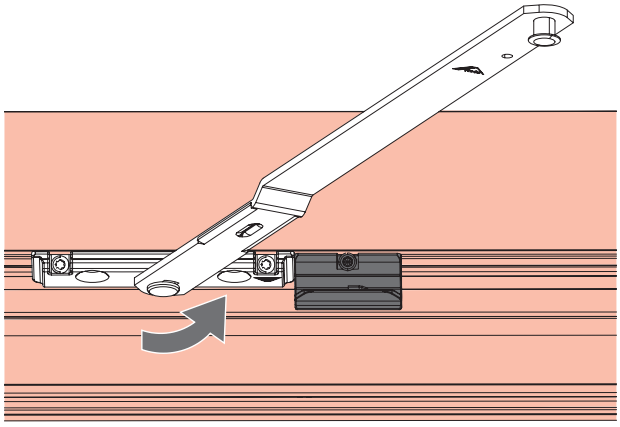

4. Clip the additional scissor stay arm into the retaining spring.

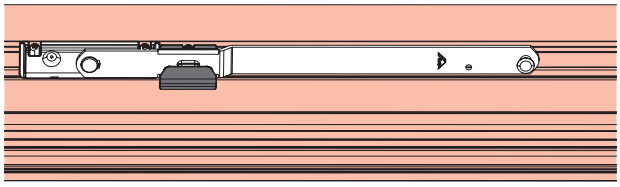

8.5.2.5 TiltSafe components

INFO
Tamper-proof screws cannot be undone.

TiltSafe set

INFO
- Install the SEC striker for tilt ventilation with lock-in position [A] on the handle side.
- Install the SEC striker for tilt ventilation without lock-in position [B] at the bottom and on the hinge side.

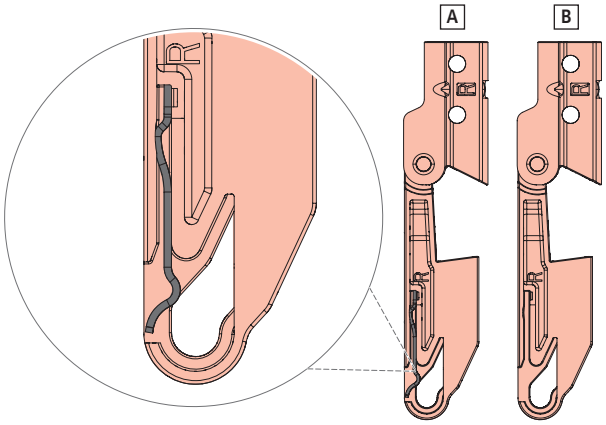

1. Swing the SEC striker for tilt ventilation [1] into the frame at the specified position (see installation drawing → *9 "Installation drawings" from page 273*).

   Pre-position the SEC striker with threaded pin [2].

   Tool: T10 hexalobular socket

   Torque: 2 – 2.5 Nm

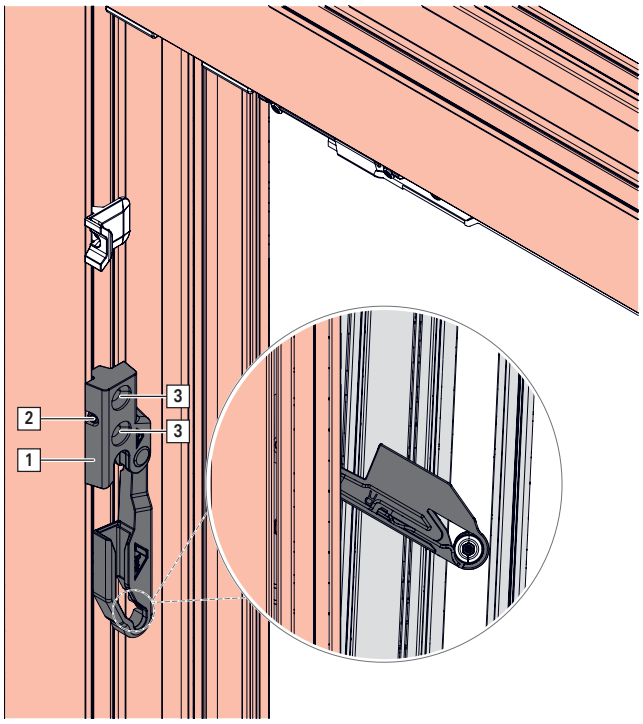

2. Secure with two tamper-proof screws [3].

TiltSafe tilt striker

1. Swing the TiltSafe tilt striker [1] into the frame at the specified position (see installation drawing → *9 "Installation drawings" from page 273*).

   Secure the tilt striker with two threaded pins [2].

   Tool: T10 hexalobular socket

   Torque: 2 – 2.5 Nm

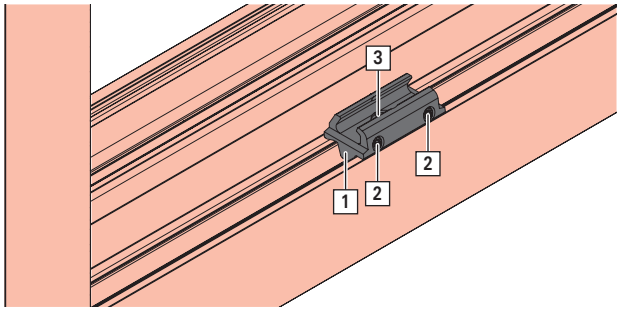

2. Fasten with one screw [3].

   Check that the tilt striker is fitted securely.

INFO
It must be ensured that the tilt striker is securely fitted (in accordance with RC classification) for security hardware.

8.5.3 Joining the sash and frame

CAUTION

Heavy loads pose the risk of injury and property damage.

Lifting and carrying heavy loads in an uncontrolled manner may lead to physical injury and property damage.

- Transport and installation must be carried out by at least two people.
- Use transportation means. → *14 "Transport" from page 340*

8.5.3.1 Connecting the pivot rest to the corner hinge

1. Move the handle to the turn position.

2. Move the pivot rest and stay bearing to the initial position (closed sash position).

3. With the sash slightly tilted, guide it along the frame in a downwards direction until you feel the hinge meet the bearing.

a. Secure the sash to prevent it from falling.
b. Sash stay 390: open the sash approximately 90°.
   Sash stay 500 / 735: open the sash approximately 10°.

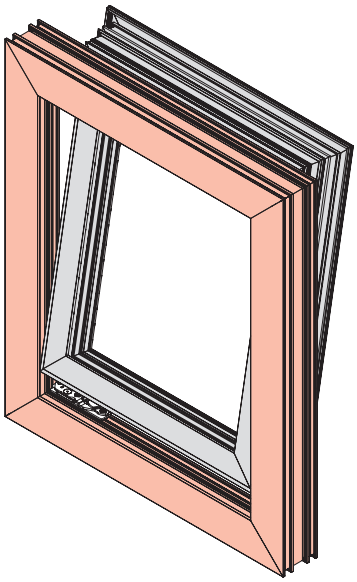

4. Sash stay 500 / 735: push the mishandling device [A].
   Move the handle to the tilt position.
   Under normal circumstances, this constitutes incorrect operation of the hardware, but it is a necessary step in this case.

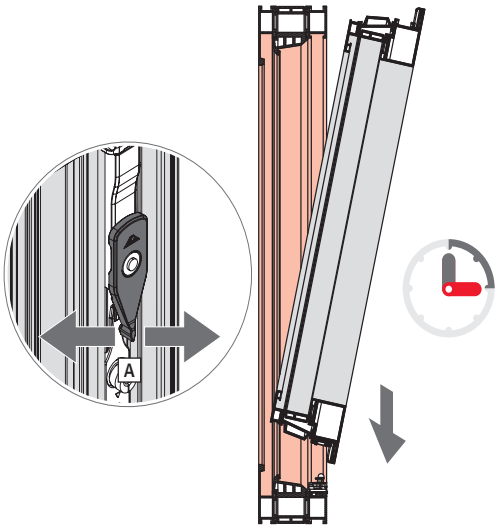

8.5.3.2 Mounting sash stay 390

1. Open the stay bearing 90° and swing it into the frame.

INFO
The baseplate must engage behind it.

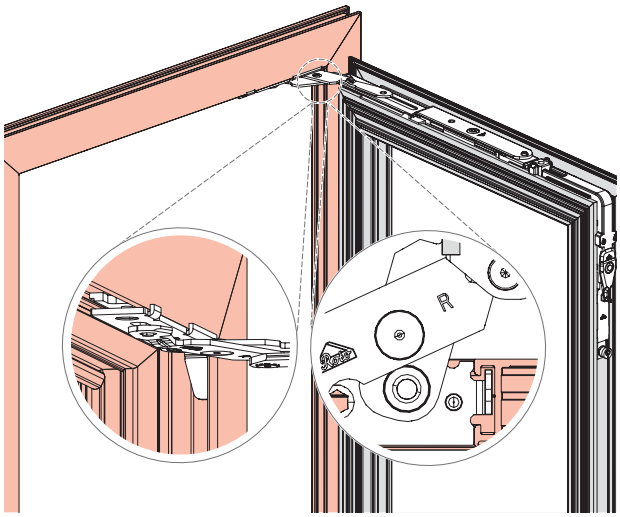

2. Move the clamp strip [1] as far as it will go.
   Push the baseplate onto the profile so that it is level and clamp the clamp strip with two screws [2].
   Check that the sash stay is fitted securely.
   Tool: T20 hexalobular socket
   Torque: 4.5 – 5.5 Nm

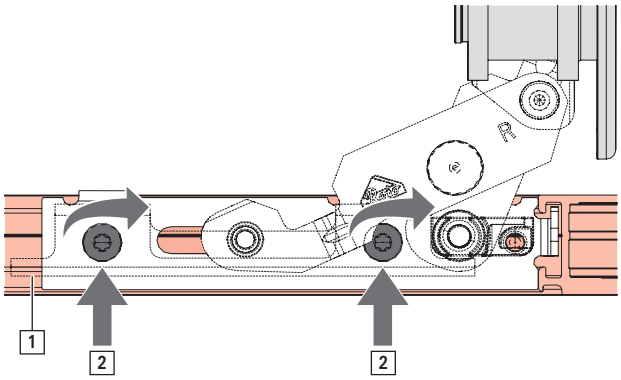

3. Notch the gasket on the sash in the area of the sash stay by 120 mm, measured from the corner, if this is necessary for space reasons.

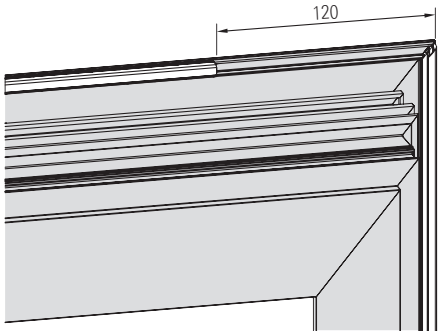

8.5.3.3 Mounting sash stay 500

1. Mount the sash stay in the guide groove on the scissor stay guide [A].

   Mount the tab in the hole in the scissor stay guide [B].

WARNING
An unsecured sash may pose a risk of death!
The sash may fall if the sash stay is not correctly connected to the scissor stay guide.
- Check correct mounting.

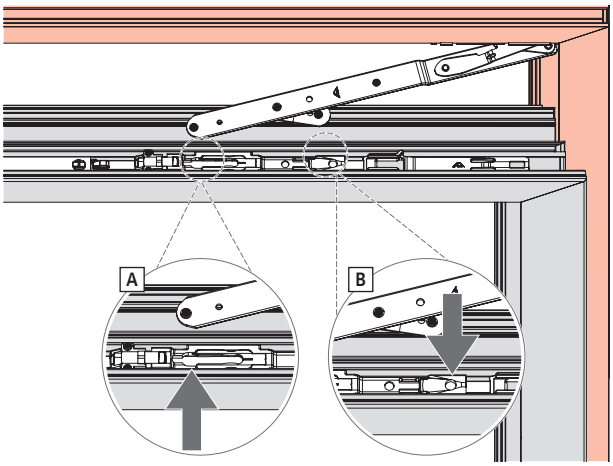

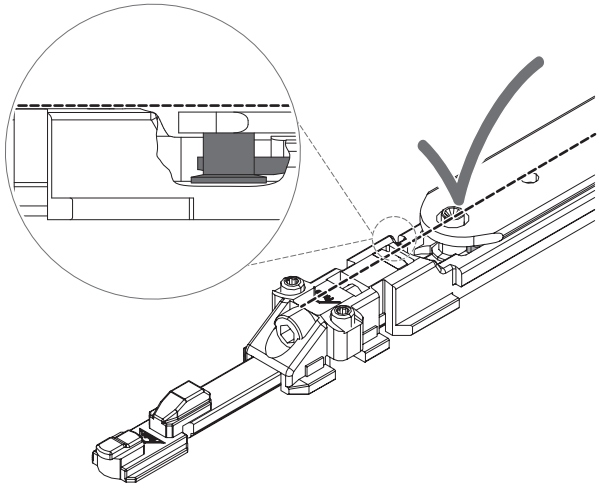

Fig. 8.2: Correct mounting (no projection from the sash stay to the scissor stay guide).

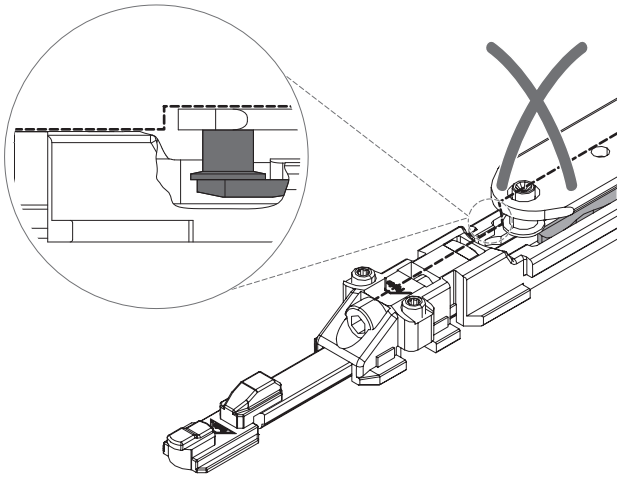

Fig. 8.3: Incorrect mounting (projection from the sash stay to the scissor stay guide impermissible).

8.5.3.4 Mounting sash stay 735

1. Mount the mounting pin [1] on the stay arm in the guide groove and bolt [2] to the scissor stay guide in the stay arm recess.

WARNING
An unsecured sash may pose a risk of death!
The sash may fall if the sash stay is not correctly connected to the scissor stay guide.
- Check correct mounting.

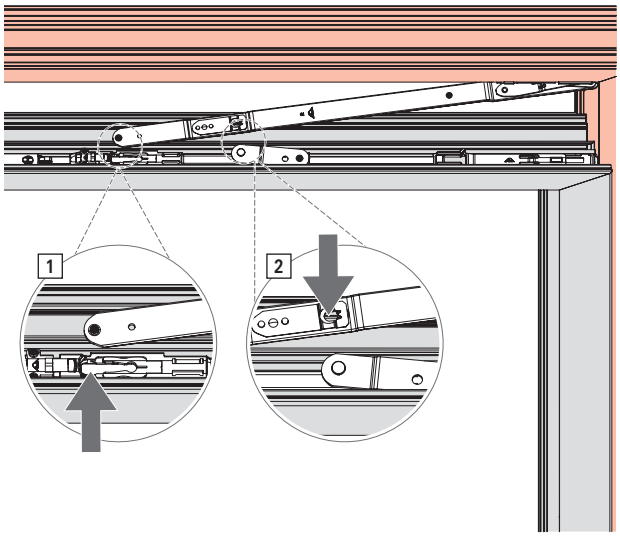

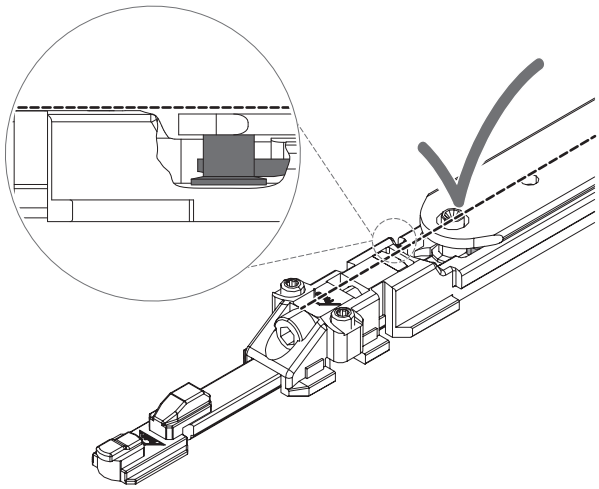

Fig. 8.4: Correct mounting (no projection from the sash stay to the scissor stay guide).

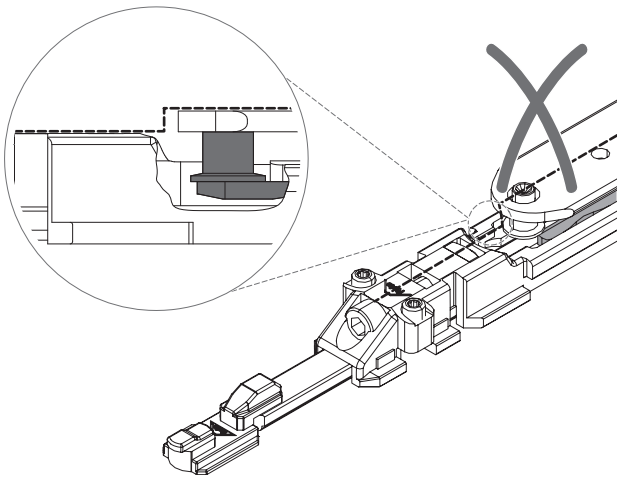

Fig. 8.5: Incorrect mounting (projection from the sash stay to the scissor stay guide impermissible).

8.6 Turn-Only hardware

8.6.1 Sash

8.6.1.1 Rebate stay hinge, couplable

Installing the rebate stay hinge, couplable

⇨ Connecting rods CR3 and CR4 prepared (see installation drawing → *9 "Installation drawings" from page 273*).

1. Insert connecting rod CR4 with components in the Euro-groove on the hinge side.

   Link connecting rod CR3 and the CL corner drive to the rebate stay hinge and insert the entire assembly at the top, starting from the hinge side. Link connecting rod CR4 to the CL corner drive.

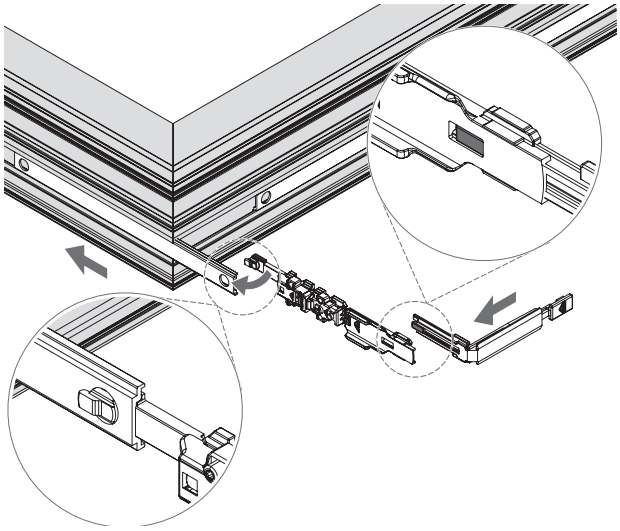

2. Secure the CL corner drive with the retaining fork.

   Fix the rebate stay hinge in position with two piercing screws [A].

   Tool: T10 hexalobular socket

   Torque: 2 – 2.5 Nm

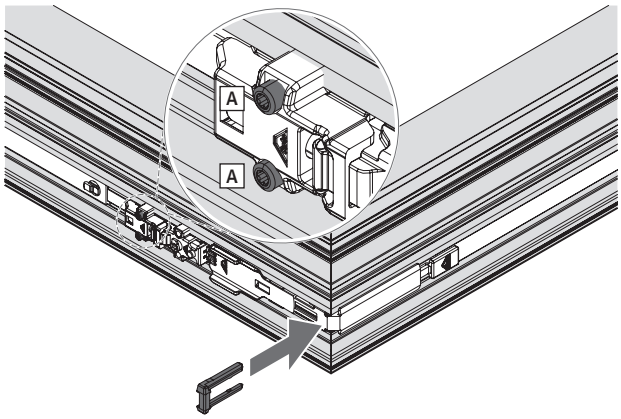

8.6.1.2 Rebate stay hinge

Installing the rebate stay hinge

1. Insert the rebate stay hinge into the Euro-groove at the top.

   Fix the rebate stay hinge in position (see installation drawing → *9 "Installation drawings" from page 273*) with two piercing screws [A].

   Tool: T10 hexalobular socket

   Torque: 2 – 2.5 Nm

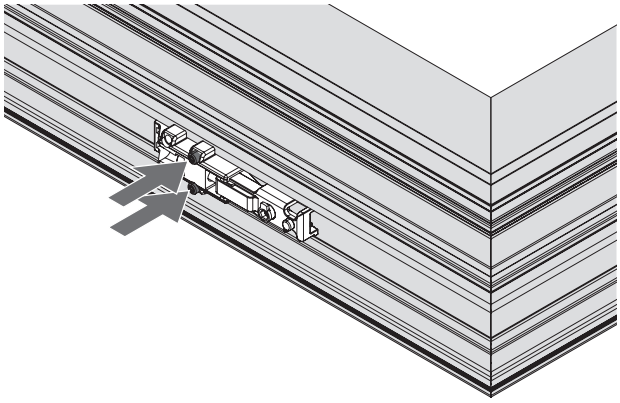

8.6.1.3 Scissor stay guide 500, 735

INFO
The installation of scissor stay guide 735 is shown here

Installing scissor stay guide 500, 735

⇨ Connecting rods CR3 and CR4 prepared (see installation drawing → *9 "Installation drawings" from page 273*).

1. For a profile with extended connecting rod groove (ECC), use a profile-related bracket [1] as a support.

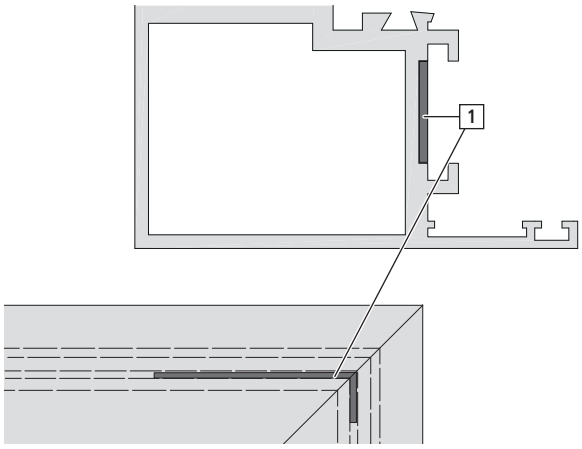

2. Insert connecting rod CR4 with components in the Euro-groove on the hinge side.

   Link connecting rod CR3 and the CL corner drive to the scissor stay guide and insert the entire assembly at the top, starting from the hinge side. Link connecting rod CR4 to the CL corner drive.

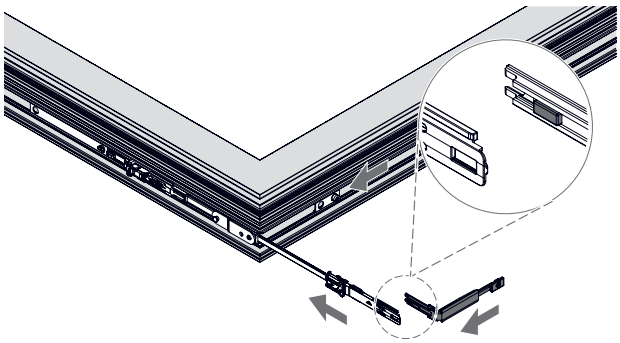

3. Secure the CL corner drive with the retaining fork.

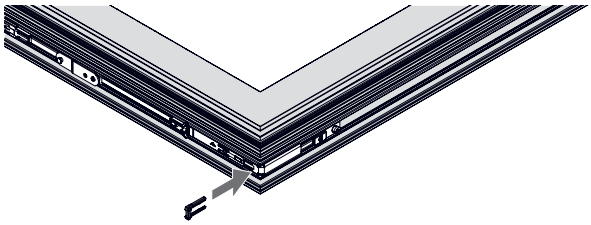

4. Prepare the jig for the scissor stay guide by inserting the positioning pin into the corresponding drill hole (depending on the scissor stay guide selected).

   Scissor stay guide 500 = AlDes. size 1

   Scissor stay guide 735 = AlDes. size 2

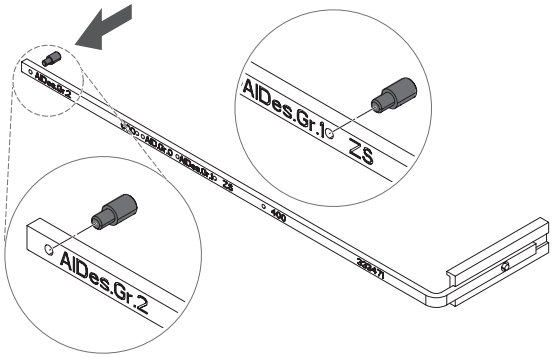

5. Position the jig on the Euro-groove so that it is level [A].

   Open the scissor stay guide link and insert the jig positioning pin into the drill hole provided [B].

   Secure the scissor stay guide in position with two piercing screws [C].

   Tool: T10 hexalobular socket

   Torque: 2 – 2.5 Nm

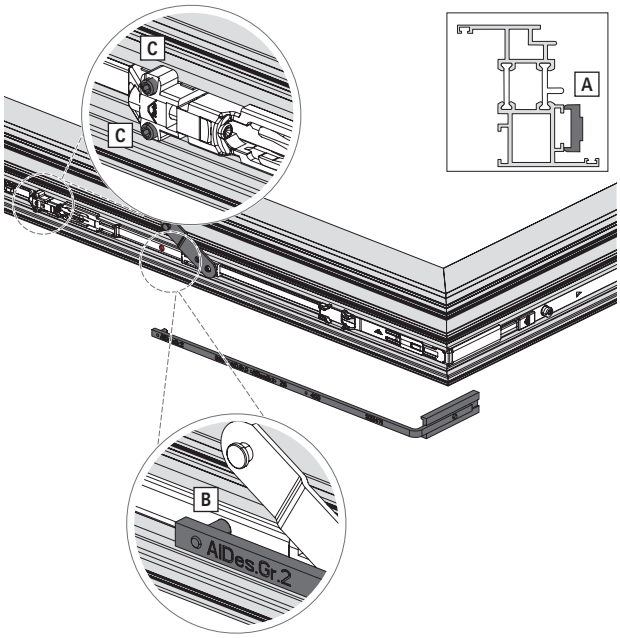

8.6.1.4 Corner hinge

INFO
The 180 kg adjustment piece does not feature lateral adjustment.

Installing the corner hinge

1. For a profile with extended connecting rod groove (ECC), use a profile-related bracket [1] as a support.

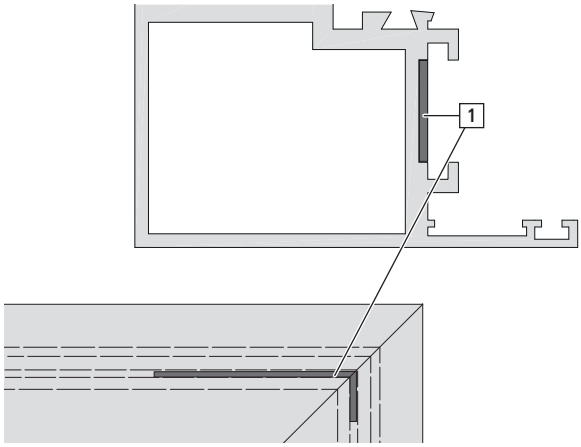

2. Insert the adjustment piece [1] into the connecting rod groove on the hinge side.
   Insert the corner hinge [2] into the connecting rod groove at the bottom.

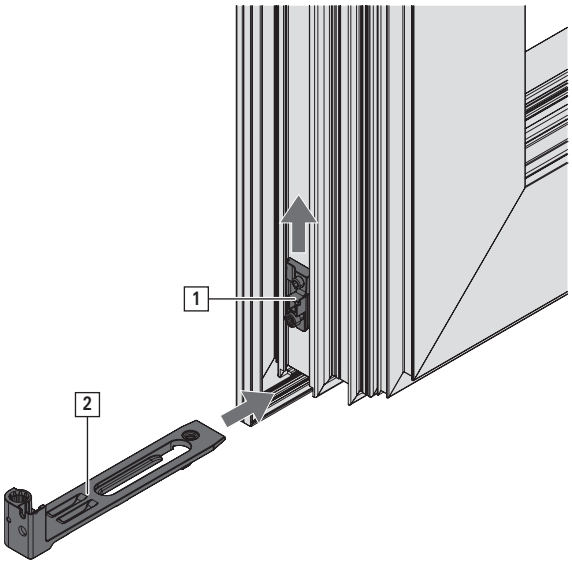

3. Push the adjustment piece into the corner hinge.

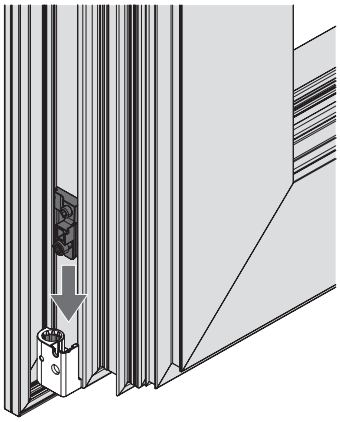

4. Secure the adjustment piece with a preassembled threaded pin.

   Tool: T10 hexalobular socket

   Torque: 2 – 2.5 Nm

   Check that the hinge is fitted securely.

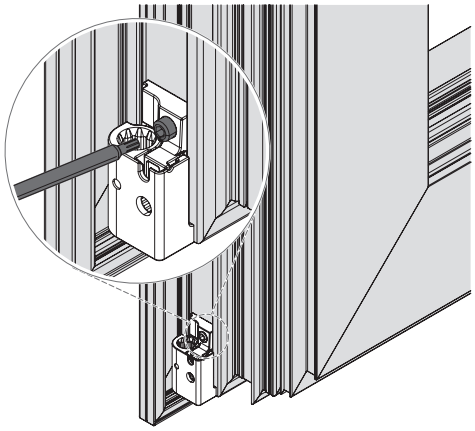

8.6.1.5 CL sash component

Installing the CL sash component

1. Insert the CL sash component into the sash groove on the hinge side.

   Fasten the CL sash component at the specified position (see installation drawing → *9 "Installation drawings" from page 273*) with a preassembled threaded pin.

   Tool: T10 hexalobular socket

   Torque: 2 – 2.5 Nm

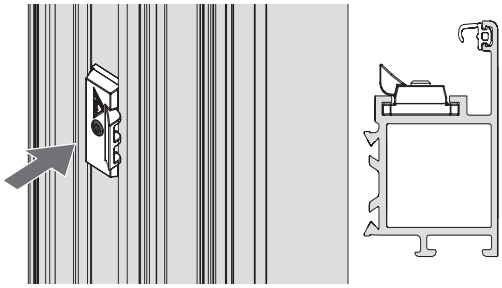

8.6.1.6 Locking sleeve

INFO
Sash stay 735: only screw down the locking sleeve with the screw after the sash stay has been mounted.

Installing the locking sleeve

1. Produce the espagnolette lock by using a locking sleeve in the slot on connecting rod CR2.

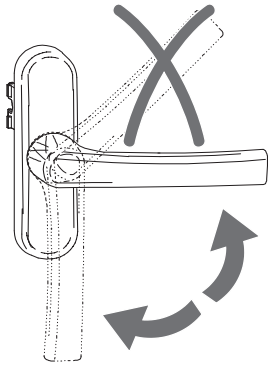

2. Produce the slot in connecting rod CR2 before installation [A].

INFO
X = freely positionable (suggestion: 60 mm)

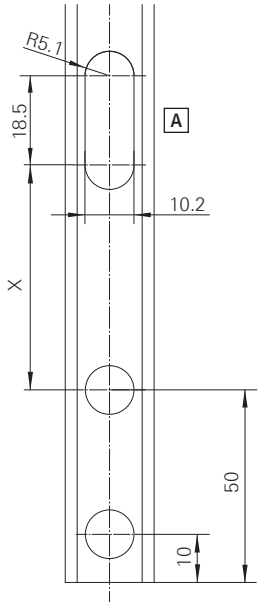

3. Drill out the sash in the 90° handle position [B] for locking sleeve with screw [C].
   Drill the hole:
   1 x Ø 3.5 mm; at least 4 mm deep.
   Fasten the locking sleeve [1] with the screw [2].
   Tool: T25 hexalobular socket
   Torque: 1.5 – 2.0 Nm

8.6.2 Frame

INFO
Install the frame components when the frame is horizontal (workshop).

Once the frame is fitted, the reveal may prevent frame components from being installed correctly.

8.6.2.1 Pivot rest

Installing the pivot rest

1. Align the clamping blocks.

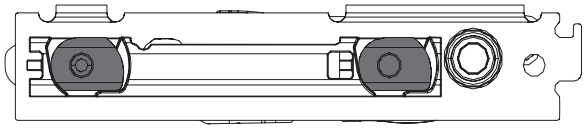

INFO
For selecting the clamp strip version depending on the clamp strip dimensions = C (profile leg thickness) + J (groove inside width), → *from page 39*.

2. Open the bearing and swing it into the profile so that the baseplate engages behind it.

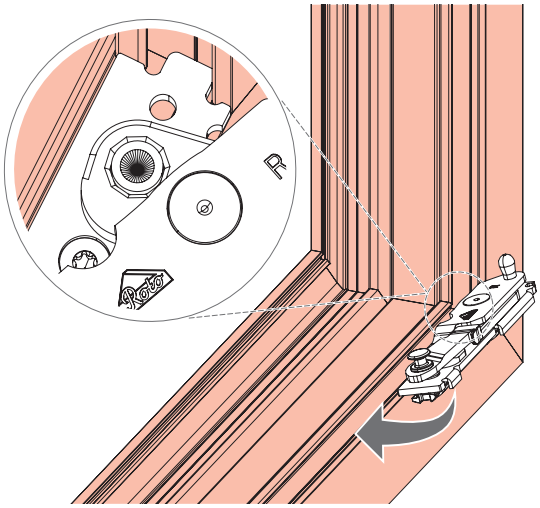

3. Push the baseplate onto the profile so that it is level and tighten the preassembled screw [1].

   Check that the bearing is fitted securely.

   Tighten the screw [2].

   Tool: T20 hexalobular socket

   Torque: 4.5 – 5.5 Nm

INFO

- Depending on the strength of the profile, or with a base groove thickness > 2 mm, it may be necessary to predrill the area of the screw [2]. To do so, use the pivot rest / stay bearing jig or create the corresponding drilling pattern in mechanical production (→ *from page 37*).
- Note the screw sequence [1], [2].
- Install and remove the bearing a maximum of two times.

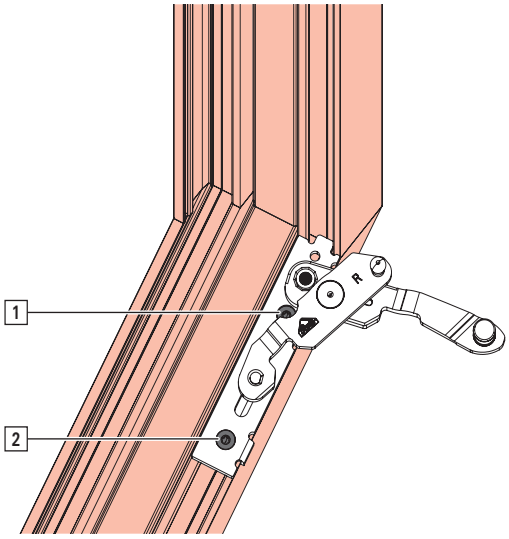

4. Close the bearing.

INFO

Do not leave a gap between the baseplate and profile [A].

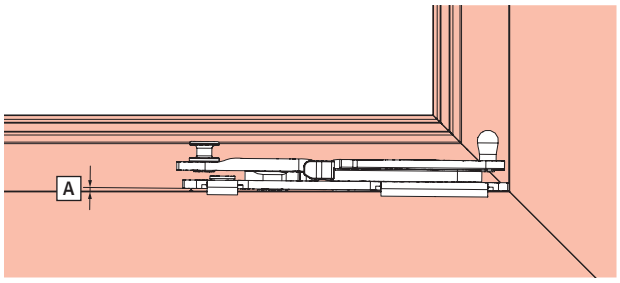

8.6.2.2 Rebate sash stay / rebate sash stay, couplable / sash stay 735

INFO
The installation of sash stay 735 is shown here

Installing the rebate sash stay / rebate sash stay, couplable / sash stay 735

1. Align the clamping blocks.

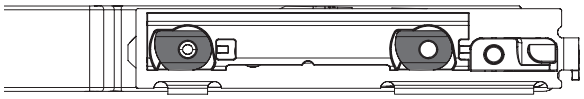

INFO
For selecting the clamp strip version depending on the clamp strip dimensions = C (profile leg thickness) + J (groove inside width), → *from page 39*.

2. Open the sash stay and swing the bearing into the profile so that the baseplate engages behind it.

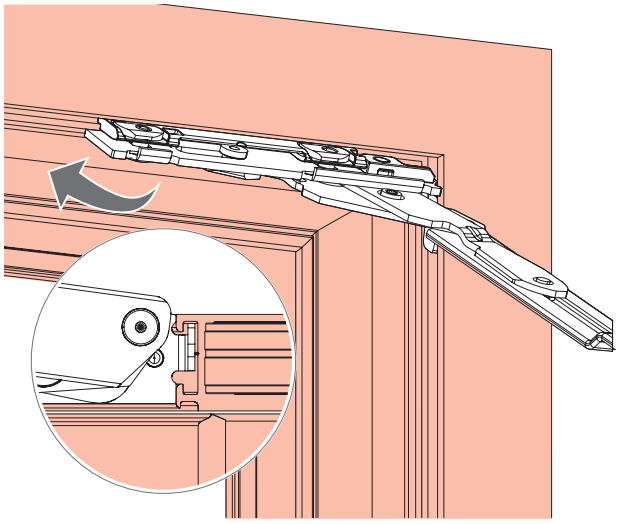

3. Push the baseplate onto the profile so that it is level and tighten the preassembled screw [1].
   Check that the sash stay is fitted securely.
   Tighten the screw [2].
   Tool: T20 hexalobular socket
   Torque: 4.5 – 5.5 Nm

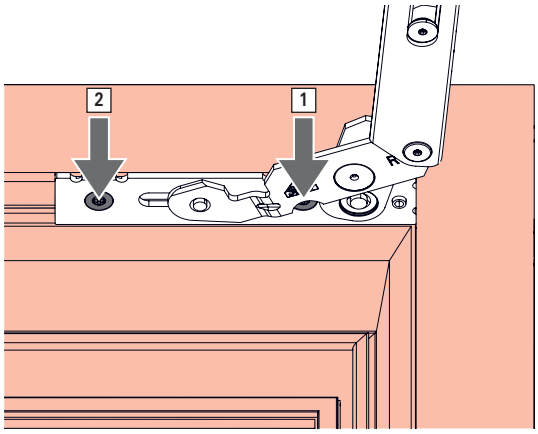

INFO
- Depending on the strength of the profile, or with a base groove thickness > 2 mm, it may be necessary to predrill the area of the screw [2]. To do so, use the pivot rest / stay bearing jig or create the corresponding drilling pattern in mechanical production (→ *from page 37*).
- Note the screw sequence [1], [2].
- Install and remove the sash stay a maximum of two times.

4. Close the sash stay.

INFO
Do not leave a gap between the baseplate and profile [A].

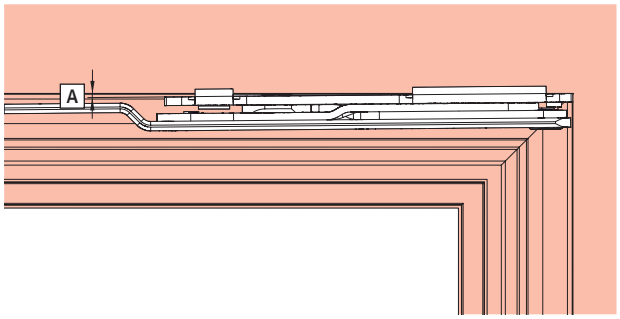

8.6.2.3 CL frame component

Installing the CL frame component

1. Swing the CL frame component on the hinge side into the frame at the specified position (see installation drawing → *9 "Installation drawings" from page 273*).

   Screw down the CL frame component with two preassembled threaded pins.

   Tool: T10 hexalobular socket

   Torque: 2 – 2.5 Nm

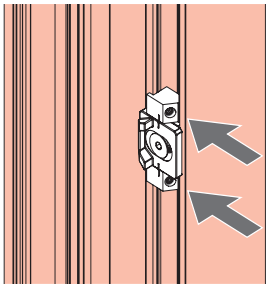

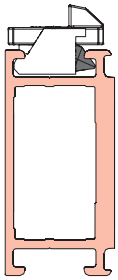

8.6.3 Joining the sash and frame

CAUTION

Heavy loads pose the risk of injury and property damage.

Lifting and carrying heavy loads in an uncontrolled manner may lead to physical injury and property damage.

- Transport and installation must be carried out by at least two people.
- Use transportation means. → *14 "Transport" from page 340*

8.6.3.1 Connecting the pivot rest to the corner hinge

1. Move the handle to the turn position.

2. Move the pivot rest and stay bearing to the initial position (closed sash position).

3. With the sash slightly tilted, guide it along the frame in a downwards direction until you feel the hinge meet the bearing.

a. Secure the sash to prevent it from falling.
b. Sash stay 390: open the sash approximately 90°.
   Sash stay 500 / 735: open the sash approximately 10°.

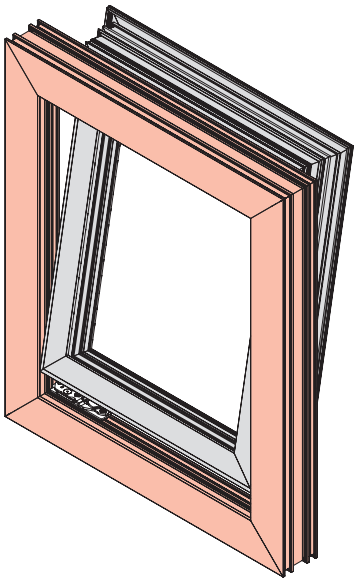

4. Sash stay 500 / 735: push the mishandling device [A].
   Move the handle to the tilt position.
   Under normal circumstances, this constitutes incorrect operation of the hardware, but it is a necessary step in this case.

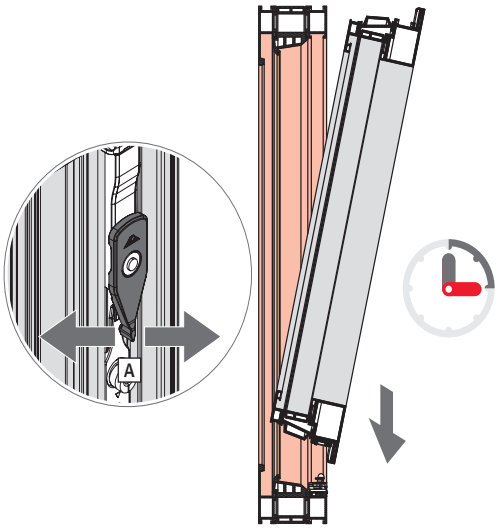

8.6.3.2 Mounting the rebate sash stay, couplable

WARNING
Incorrect installation may pose a risk of death!
The combination of “rebate stay hinge, couplable [1]” installed with “rebate sash stay with clamp strip [3]” can lead to hazardous situations or even cause the sash to fall.
- Only install the “rebate stay hinge, couplable [1]” in conjunction with the “rebate sash stay, couplable, with clamp strip [2]”.

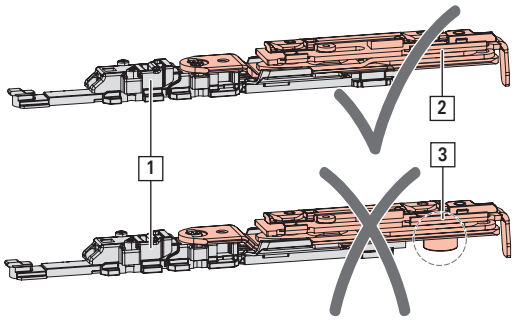

1. Connect the pivot rest to the corner hinge → *from page 222*.

2. Open the rebate sash stay, couplable, and guide it on the sash via the rebate stay hinge, couplable.
   Guide the swivel pin on the rebate stay hinge, couplable, through the drill hole on the rebate sash stay, couplable.

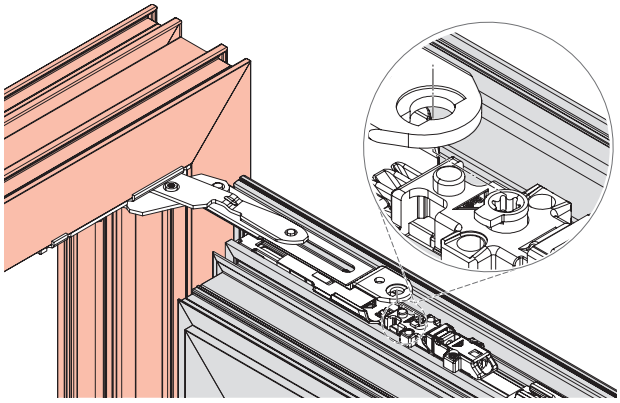

3. Lock the connection by turning the pin 180°.
   Tool: T25 hexalobular socket

WARNING
Incorrect installation may pose a risk of death!
A missing connection can lead to hazardous situations or even cause the sash to fall.
- Lock by turning the pin 180°.

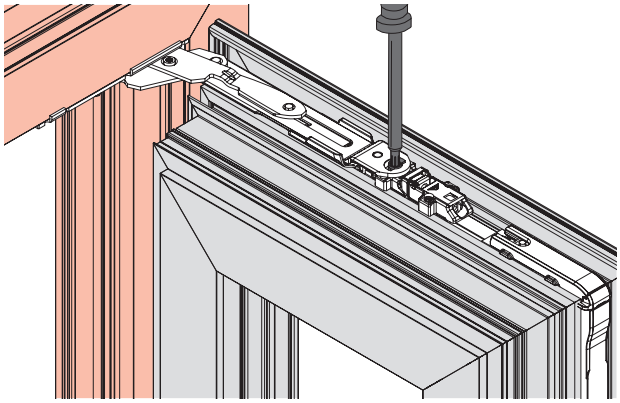

4. View from above, after locking.

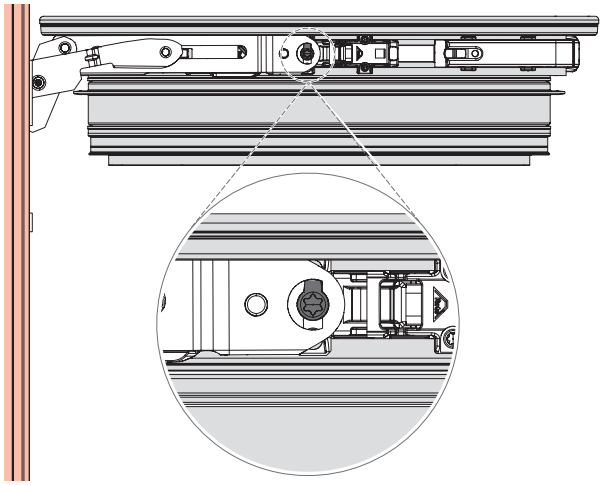

8.6.3.3 Mounting the rebate sash stay

WARNING
Incorrect installation may pose a risk of death!
The combination of "rebate stay hinge [1]" installed with "rebate sash stay, couplable, with clamp strip [3]" can lead to hazardous situations or even cause the sash to fall.
- Only install the "rebate stay hinge [1]" in conjunction with the "rebate sash stay with clamp strip [2]".

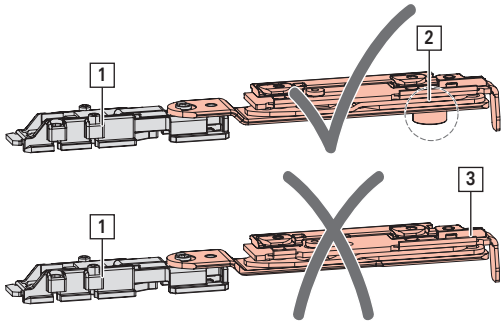

1. Connect the pivot rest to the corner hinge → *from page 222*.

2. Open the rebate sash stay and guide it on the sash via the rebate stay hinge [A].
   Insert the eccentric cam into the sash groove [B].
   Guide the swivel pin on the rebate stay hinge through the drill hole in the rebate sash stay [C].

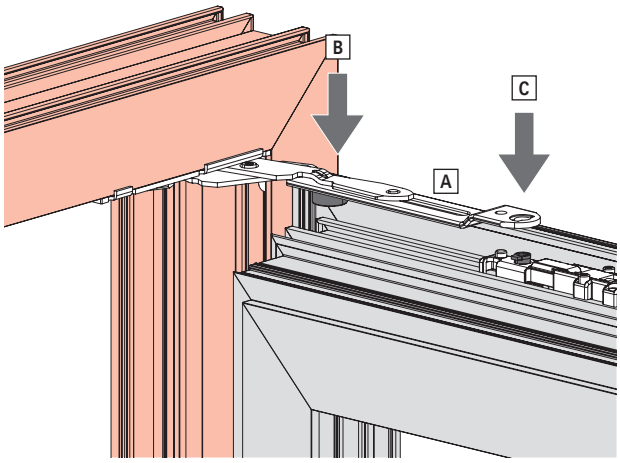

3. Lock the connection by turning the pin 180°.
   Tool: T25 hexalobular socket

WARNING
Incorrect installation may pose a risk of death!
A missing connection can lead to hazardous situations or even cause the sash to fall.
- Lock by turning the pin 180°.

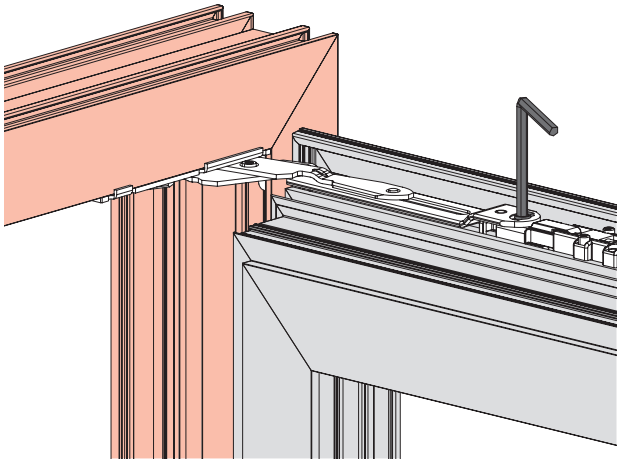

4. View from above, after locking.

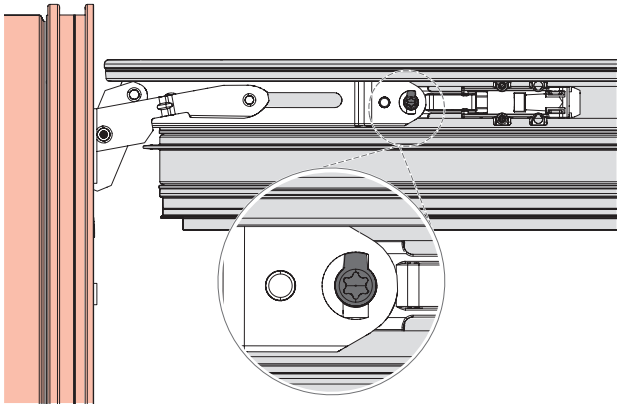

8.6.3.4 Mounting sash stay 735

1. Mount the mounting pin [1] on the stay arm in the guide groove and bolt [2] to the scissor stay guide in the stay arm recess.

WARNING
An unsecured sash may pose a risk of death!
The sash may fall if the sash stay is not correctly connected to the scissor stay guide.
- Check correct mounting.

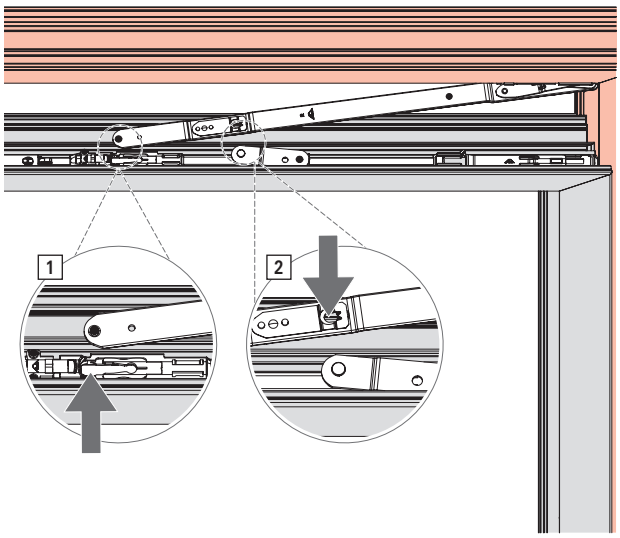

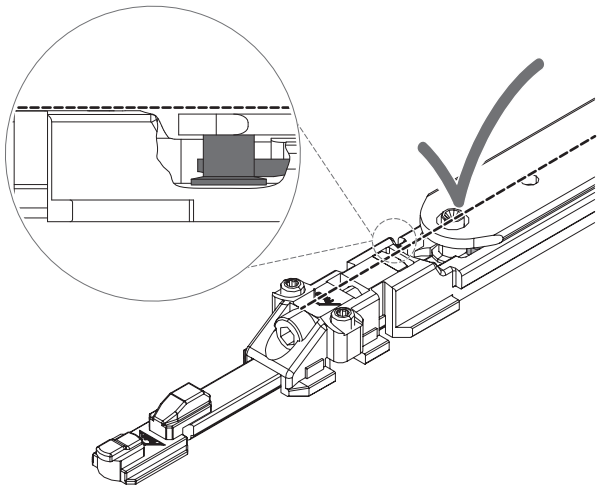

Fig. 8.6: Correct mounting (no projection from the sash stay to the scissor stay guide).

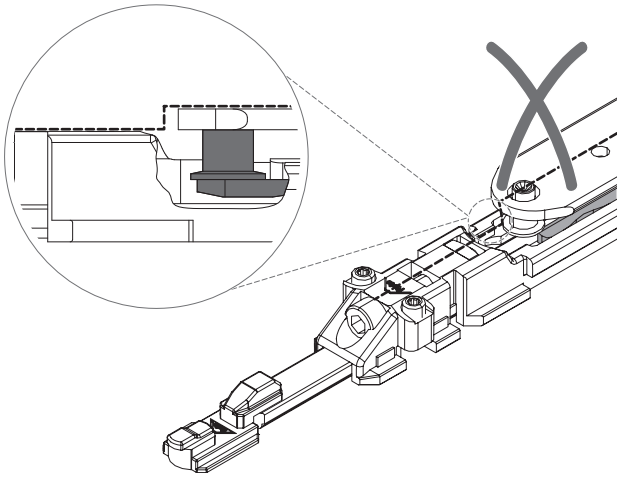

Fig. 8.7: Incorrect mounting (projection from the sash stay to the scissor stay guide impermissible).

8.7 Tilt-Only hardware, handle at the top

8.7.1 Sash

8.7.1.1 CL sash component

Installing the CL sash component

1. Insert the CL sash component into the sash groove on the hinge side.

   Fasten the CL sash component at the specified position (see installation drawing → *9 "Installation drawings" from page 273*) with a preassembled threaded pin.

   Tool: T10 hexalobular socket

   Torque: 2 – 2.5 Nm

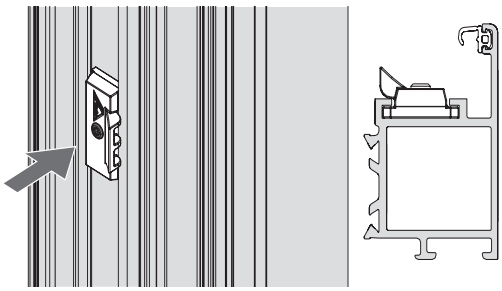

8.7.1.2 Tilt-Only stay arm slide bar

Installing the Tilt-Only stay arm slide bar

1. Insert the Tilt-Only stay arm slide bar into the sash groove.

   INFO
   Pay attention to the installation direction of the slide bar. The arrow [A] must point towards the sash overlap.

   Screw down the slide bar with two preassembled piercing screws [B].

   Check that the slide bar is fitted securely.

   Tool: T10 hexalobular socket

   Torque: 2 – 2.5 Nm

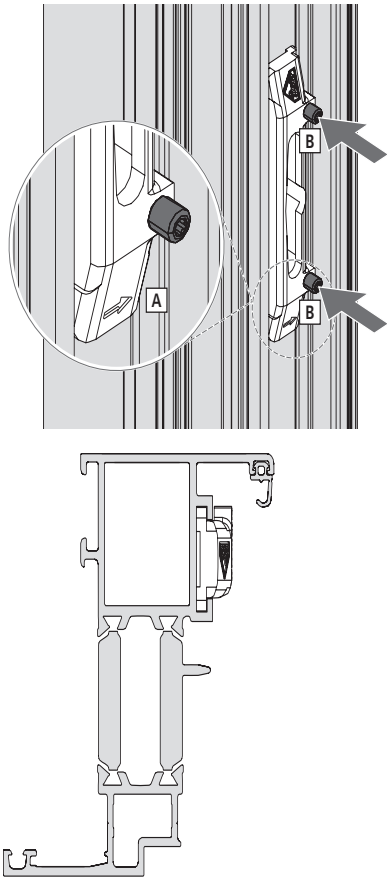

8.7.1.3 Rebate stay hinge

Installing the rebate stay hinge

1. Insert the rebate stay hinge into the Euro-groove at the top.

   Fix the rebate stay hinge in position (see installation drawing → *9 "Installation drawings" from page 273*) with two piercing screws [A].

   Tool: T10 hexalobular socket

   Torque: 2 – 2.5 Nm

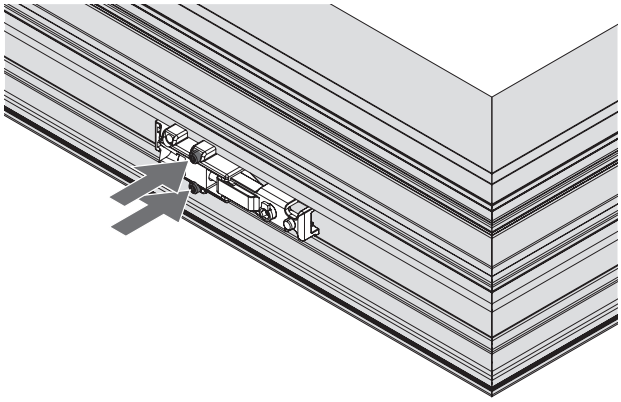

8.7.1.4 Locking sleeve

Installing the locking sleeve

1. Produce the espagnolette lock by using a locking sleeve in the slot on connecting rod CR2.

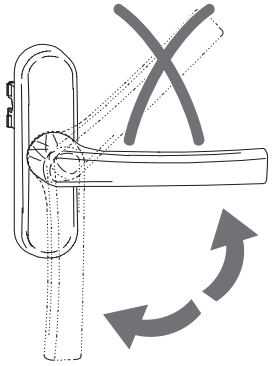

2. Produce the slot in connecting rod CR2 before installation [A].

INFO
X = freely positionable (suggestion: 60 mm)

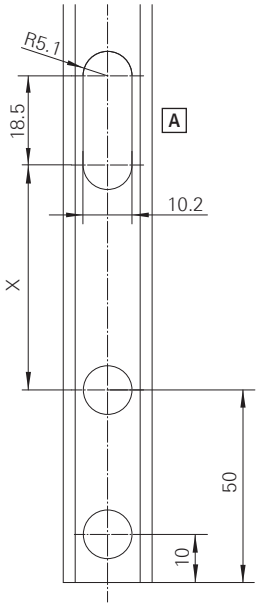

3. Drill out the sash in the 90° handle position [B] for locking sleeve with screw [C].
   Drill the hole:
   1 x Ø 3.5 mm; at least 4 mm deep.
   Fasten the locking sleeve [1] with the screw [2].
   Tool: T25 hexalobular socket
   Torque: 1.5 – 2.0 Nm

8.7.2 Frame

INFO

Install the frame components when the frame is horizontal (workshop).

Once the frame is fitted, the reveal may prevent frame components from being installed correctly.

8.7.2.1 CL frame component

Installing the CL frame component

1. Swing the CL frame component on the hinge side into the frame at the specified position (see installation drawing → *9 "Installation drawings" from page 273*).

   Screw down the CL frame component with two preassembled threaded pins.

   Tool: T10 hexalobular socket

   Torque: 2 – 2.5 Nm

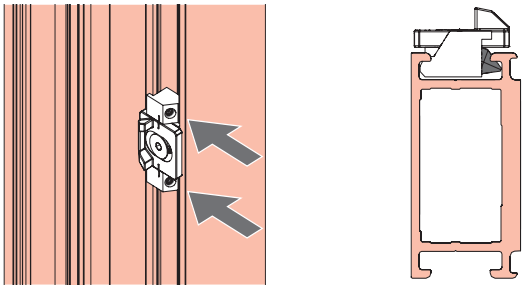

8.7.2.2 Tilt-Only stay arm

Installing the CL frame component

1. Swing the Tilt-Only stay arms into the frame at the specified position (see installation drawing → *9 "Installation drawings" from page 273*).

   Screw down the Tilt-Only stay arms with the two preassembled threaded pins.

   Tool: T10 hexalobular socket

   Torque: 2 – 2.5 Nm

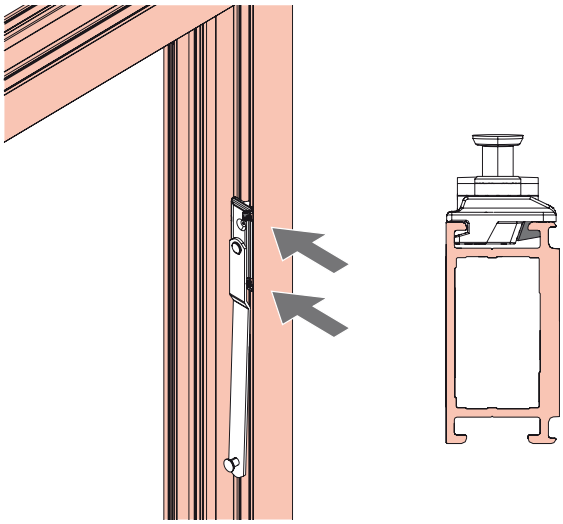

8.7.2.3 Rebate sash stay

Installing the rebate sash stay

1. Align the clamping blocks.

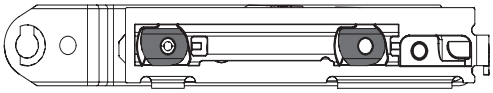

INFO
For selecting the clamp strip version depending on the clamp strip dimensions = C (profile leg thickness) + J (groove inside width), → *from page 39*.

2. Open the sash stay and swing the bearing into the profile so that the baseplate engages behind it.

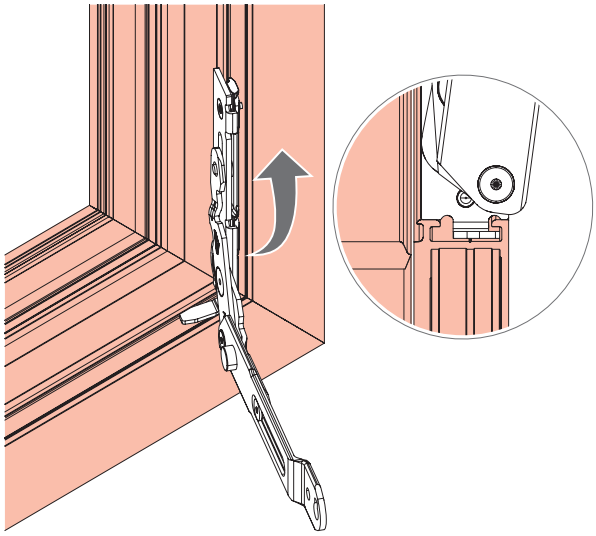

3. Push the baseplate onto the profile so that it is level and tighten the preassembled screw [1].

   Check that the sash stay is fitted securely.

   Tighten the screw [2].

   Tool: T20 hexalobular socket

   Torque: 4.5 – 6.0 Nm

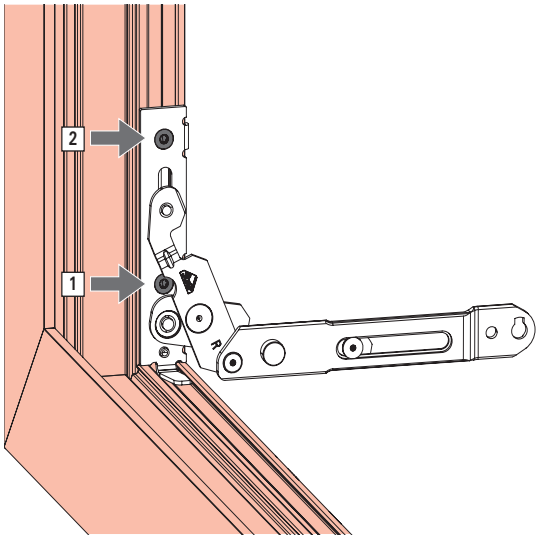

INFO
- Depending on the strength of the profile, or with a base groove thickness > 2 mm, it may be necessary to predrill the area of the screw [2]. To do so, use the pivot rest / stay bearing jig or create the corresponding drilling pattern in mechanical production (→ *from page 37*).
- Note the screw sequence [1], [2].
- Install and remove the sash stay a maximum of two times.

4. Close the sash stay.

INFO
Do not leave a gap between the baseplate and profile [A].

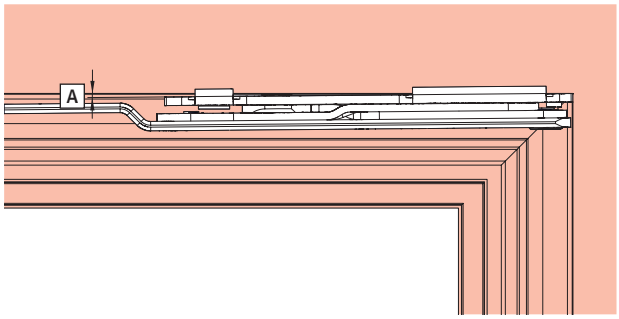

8.7.3 Joining the sash and frame

CAUTION

Heavy loads pose the risk of injury and property damage.

Lifting and carrying heavy loads in an uncontrolled manner may lead to physical injury and property damage.

- Transport and installation must be carried out by at least two people.
- Use transportation means. → *14 "Transport" from page 340*

8.7.3.1 Mounting the rebate sash stay

WARNING

Incorrect installation may pose a risk of death!

The combination of "rebate stay hinge [1]" installed with "rebate sash stay, couplable, with clamp strip [3]" can lead to hazardous situations or even cause the sash to fall.

- Only install the "rebate stay hinge [1]" in conjunction with the "rebate sash stay with clamp strip [2]".

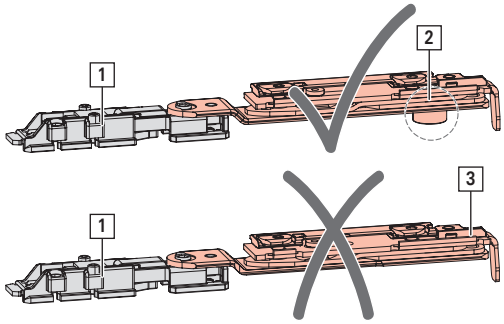

1. Open both rebate sash stays and guide them on the sash via the rebate stay hinge [A].

   Insert the eccentric cam into the sash groove [B].

   Guide the swivel pin on the rebate stay hinge through the drill hole in the two rebate sash stays [C].

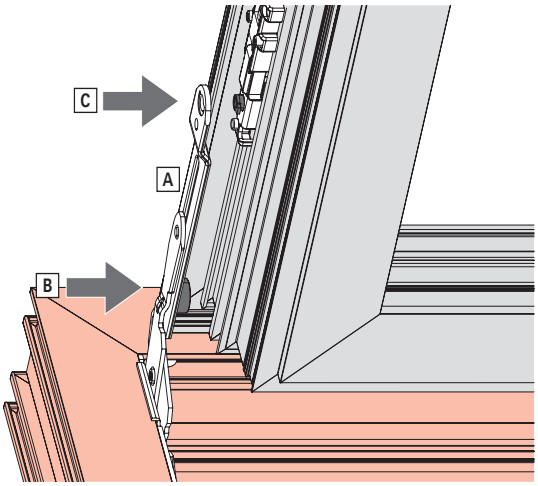

2. Lock the connection by turning the pins (right and left) 180°.

   Tool: T25 hexalobular socket

WARNING
Incorrect installation may pose a risk of death!
A missing connection can lead to hazardous situations or even cause the sash to fall.
- Lock by turning the pins (right and left) 180°.

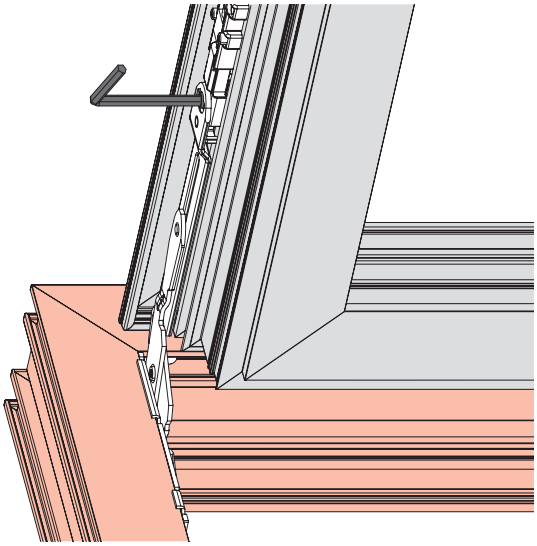

3. View from above, after locking.

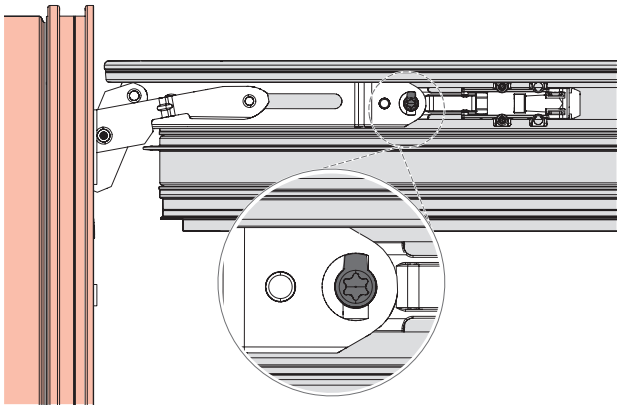

8.7.3.2 Tilt-Only stay arm (TiSt)

Connecting the Tilt-Only stay arm to the slide bar

1. In the tilted sash position, guide the scissor stay arm across the centre of the slide bar with the mounting pin [1] [A].

INFO
Secure the sash to prevent it from falling.

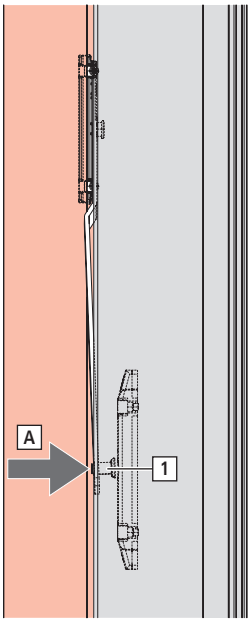

2. Insert the mounting pin in the slide bar and close the sash.

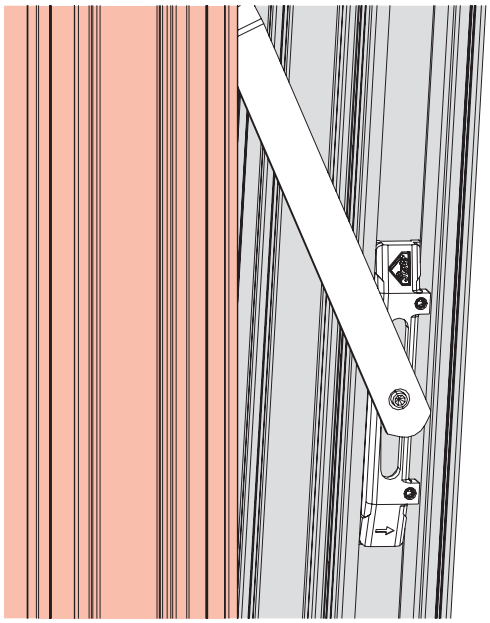

8.8 Floating-mullion hardware

8.8.1 Drilling and routing dimensions

8.8.1.1 FM espagnolette, internal

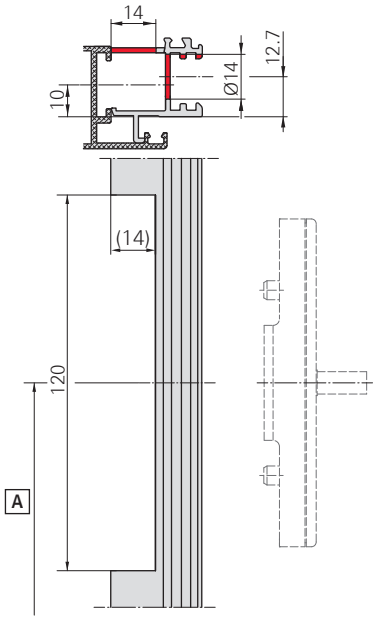

Perform routing in the surface-mounted floating-mullion profile.

[A] Floating mullion handle height (HH(FM))

Drill the hole:

1 x Ø 14 mm

8.8.1.2 Shootbolt

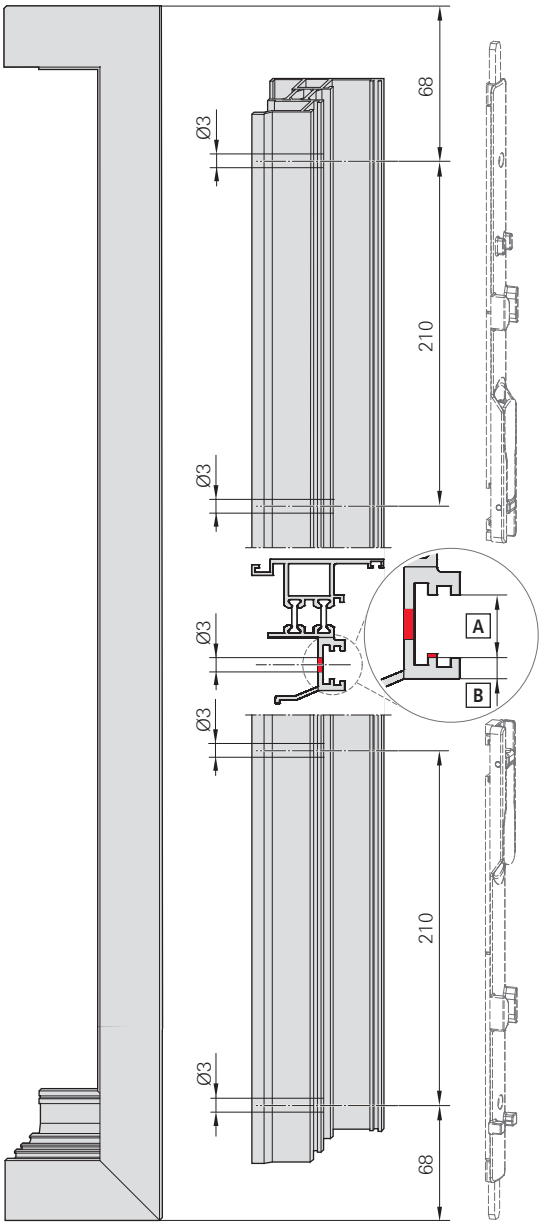

Drill holes:

4 x Ø 3 mm

[A] 14 mm (12 - 13.9 mm available upon request)

[B] Min. 3 mm, max. 4.2 mm

8.8.2 Sash

8.8.2.1 FM espagnolette

Installing the FM espagnolette

1. Connect the FM espagnolette to the sash components, insert into the sash profile and fasten using two preassembled threaded pins.

   Tool: T10 hexalobular socket

   Torque: 2 – 2.5 Nm

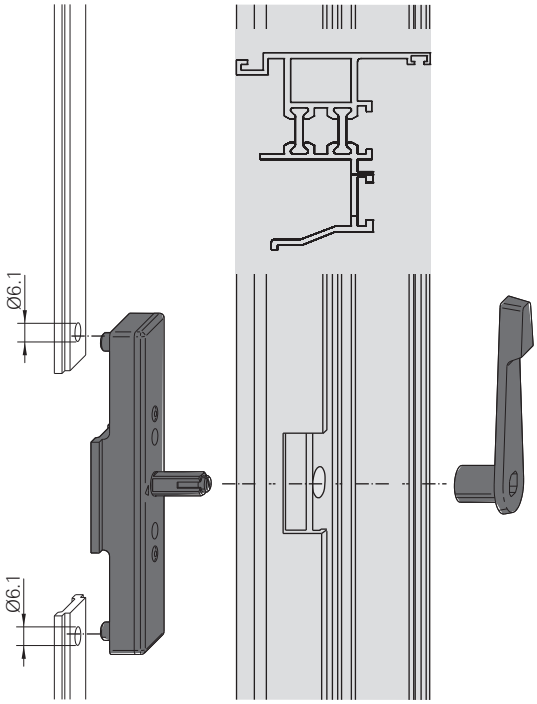

2. Install the surface-mounted floating-mullion profile on the sash.

   While doing so, guide the mount for the operating lever through the drill hole.

3. Install the operating lever on the FM espagnolette.

8.8.2.2 FM-Su espagnolette

Installing the FM-Su espagnolette

1. Install the toggle lever espagnolette with sash components in the sash.

2. Fasten the toggle lever espagnolette with two preassembled threaded pins.

   Tool: T10 hexalobular socket

   Torque: 2 – 2.5 Nm

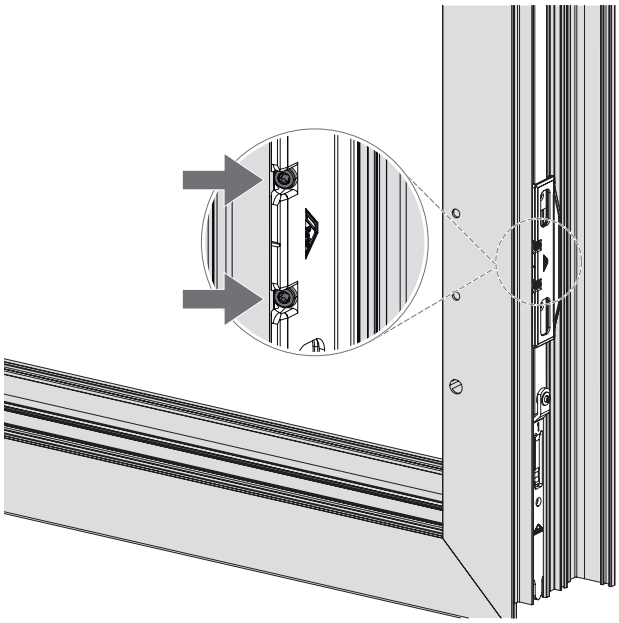

3. Turn the notch in the toggle lever towards the notch in the bolt [A].

   Tool: size 4 hex key

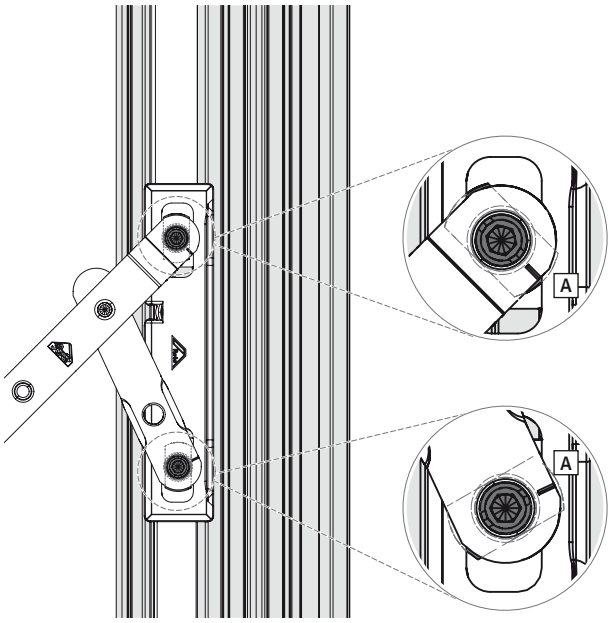

8.8.2.3 FM-SuN espagnolette

Installing the FM-SuN espagnolette

⇨ Connecting rods prepared → *from page 189*.

1. Install the guide rail with sash components in the sash.

2. Fasten the guide rail with a preassembled threaded pin.

   Tool: T10 hexalobular socket

   Torque: 2 – 2.5 Nm

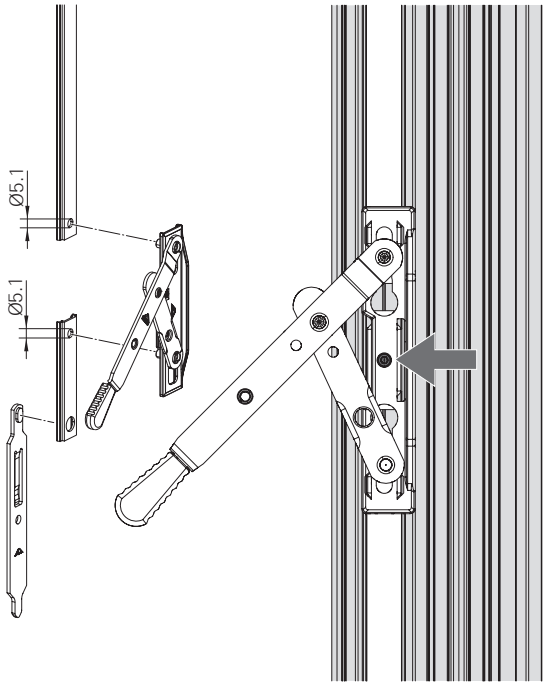

8.8.2.4 FM-Sh espagnolette

Installing the FM-Sh espagnolette

1. Insert the shootbolt into the sash profile.

2. Screw the shootbolt down when locked.
   Tool: size 4 hex key

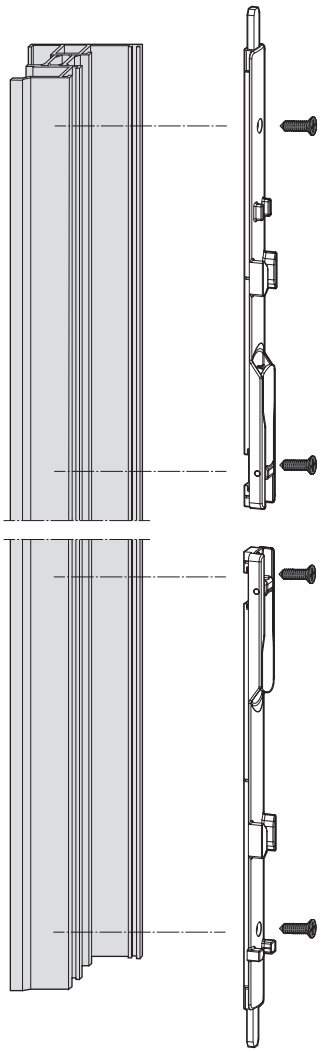

8.8.2.5 FM-R espagnolette

Installing the FM-R espagnolette

1. Connect the slider to the sash components and insert into the sash profile.

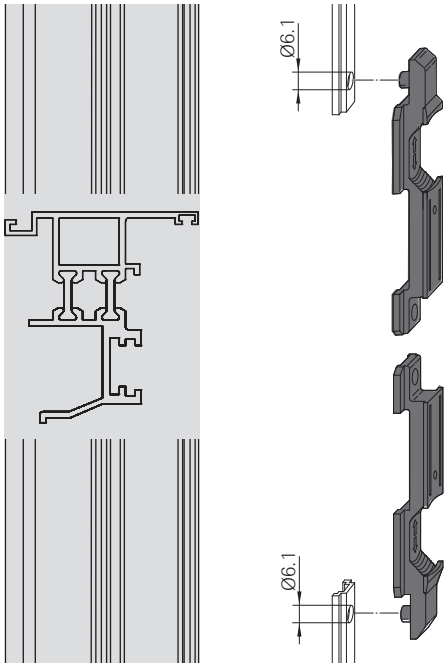

2. Stop the slider when locked.
   Tool: size 2.5 hex key

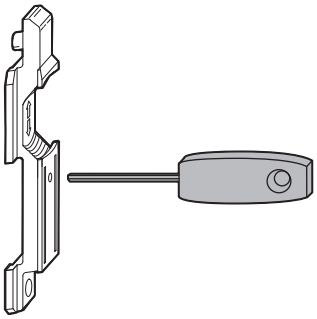

8.8.2.6 Anti-lifting device in the floating-mullion window

Preparing the anti-lifting device for installation

1. Depending on whether the anti-lifting device is installed on the left or right, break off the bottom leg on the anti-lifting device (predetermined breaking point).

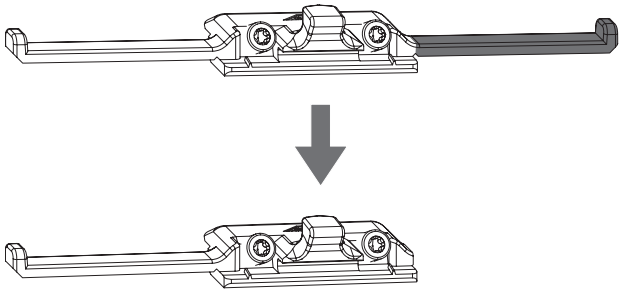

Installing the anti-lifting device

1. Place the anti-lifting device at the specified position with top leg on the striker (see installation drawing → *9.6.6 "FM, couplable | 150 kg" from page 313*).

   Fasten the anti-lifting device with two preassembled threaded pins.

   Tool: T10 hexalobular socket

   Torque: 2 – 2.5 Nm

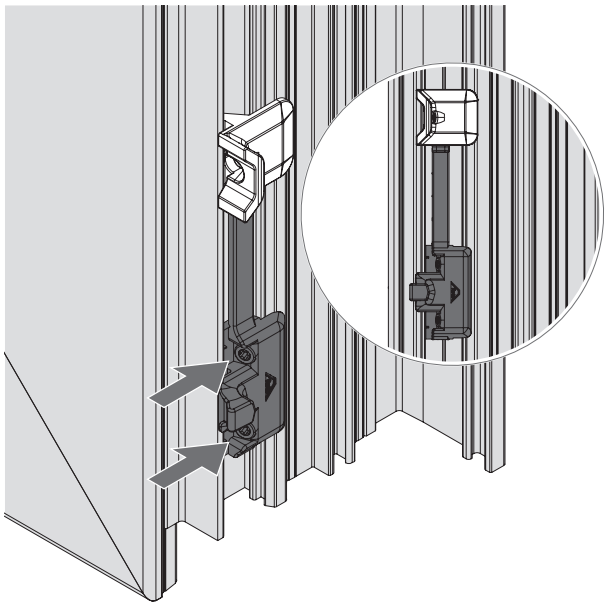

8.9 Accessories

8.9.1 Drilling and routing dimensions

8.9.1.1 Roto Line AL geared-handle

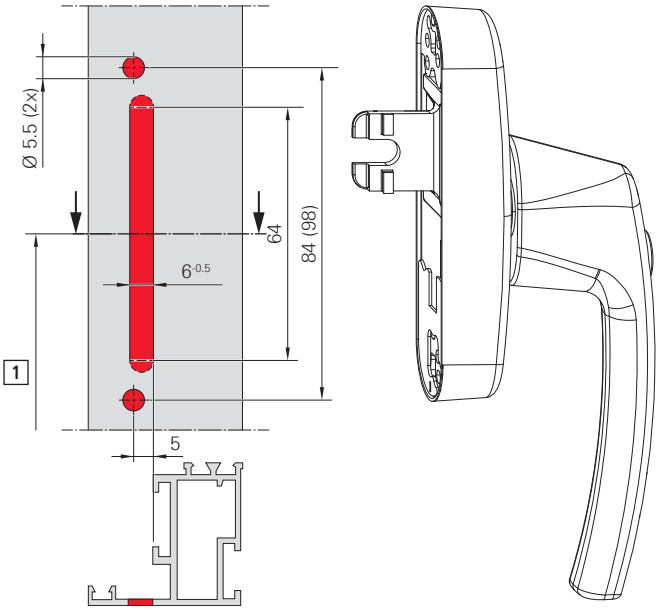

Drill holes for the handle's sprocket and lugs with SH ≥ 930 mm

[1] Handle height HH ≥ 260 mm

8.9.1.2 Flush-encased gearbox with / without mishandling device

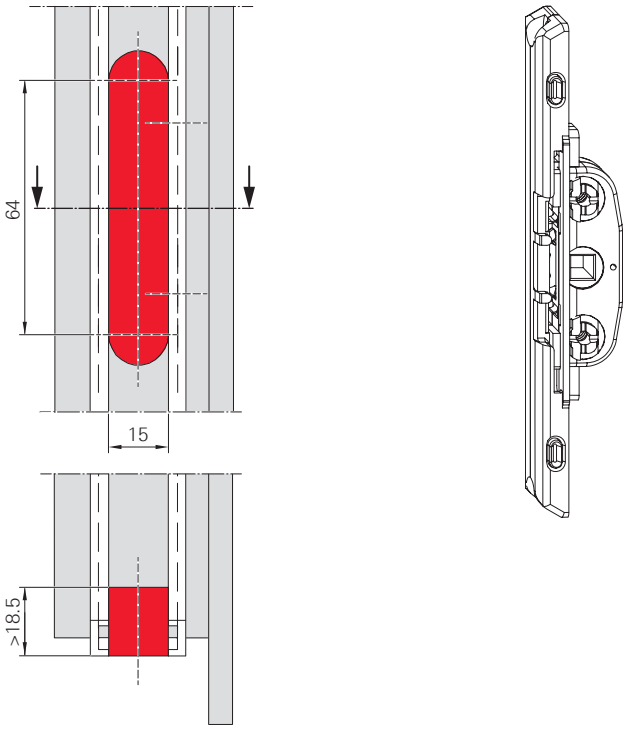

Routing for the gearbox

8.9.1.3 Window handle – standard

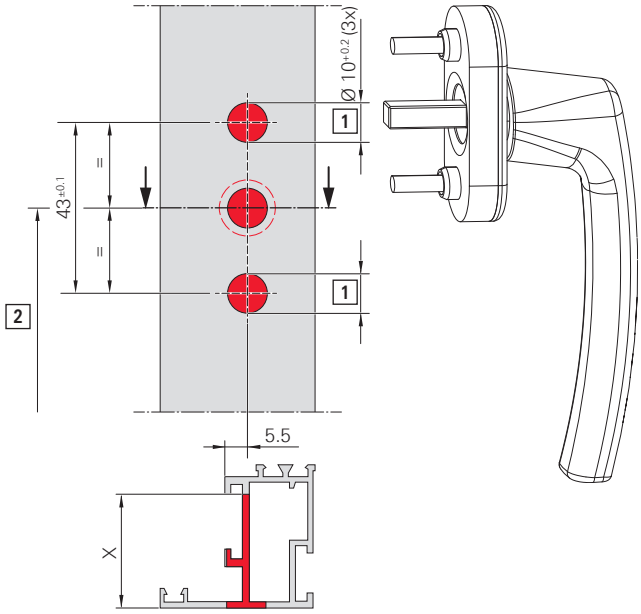

Drill holes for the handle's square spindle and lugs with SH ≥ 930

[1] Only drill through the first profile wall.

[2] Handle height = HH ≥ 260 mm

X = drilling depth for square spindle

8.9.1.4 Flush-encased gearbox with handle without escutcheon

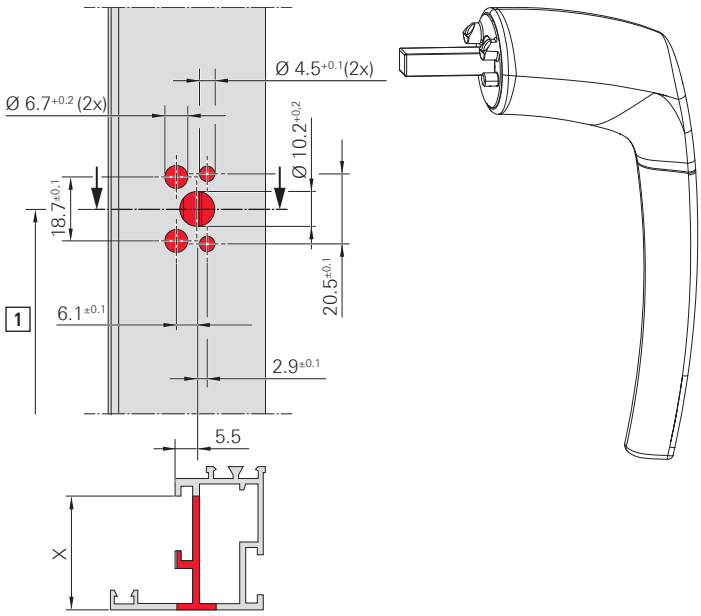

Drill holes for the handle's square spindle and lugs with SH ≥ 930

[1] Handle height = HH ≥ 260 mm

X = drilling depth for square spindle

8.9.1.5 Turn lock

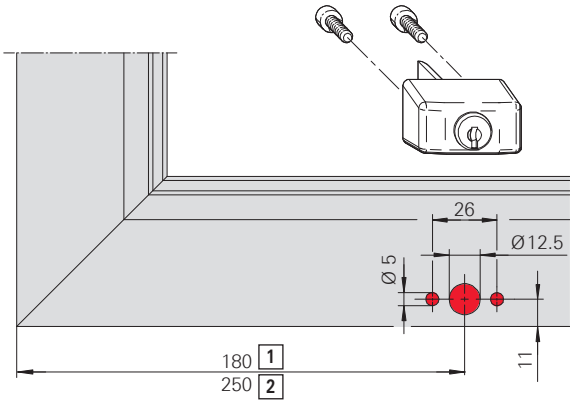

Drill holes for turn lock

[1] T&T

[2] TF

8.9.1.6 Locking plate set

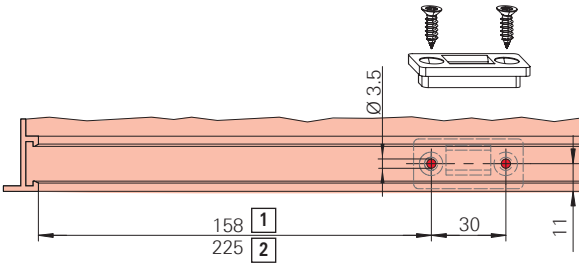

Drill holes for locking plate

[1] T&T

[2] TF

8.9.2 Roto handles

8.9.2.1 Handle without escutcheon

INFO
The handle without escutcheon can only be used on profile systems with an overlap height of ≥ 10 mm.

Installing the mounting plate with handle

⇨ The flush-encased gearbox must be installed → *from page 198*.

1. Swing the mounting plate [1] into the profile.
   Fasten the handle [2] through the mounting plate with two screws.
   Tool: T25 hexalobular socket

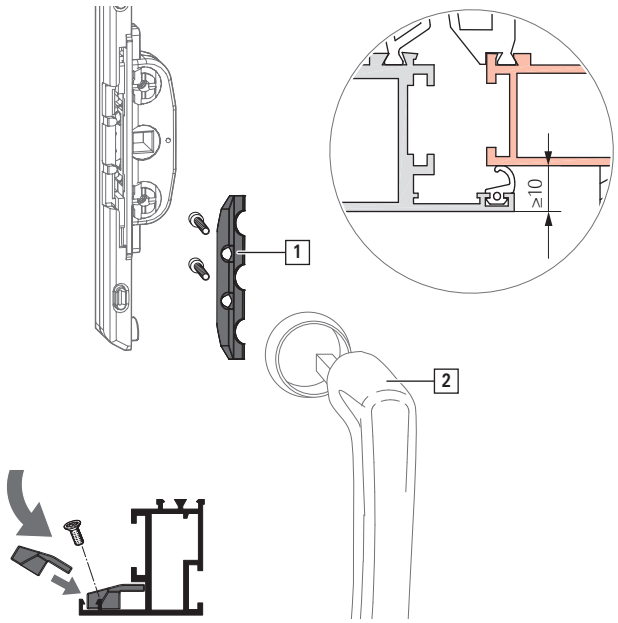

8.9.2.2 Roto Line | window handle, standard

Installing the handle

⇨ The flush-encased gearbox must be installed → *from page 198*.

1. Move the handle [1] to the turn position.

2. Rotate the cover [2] on the handle 90°.

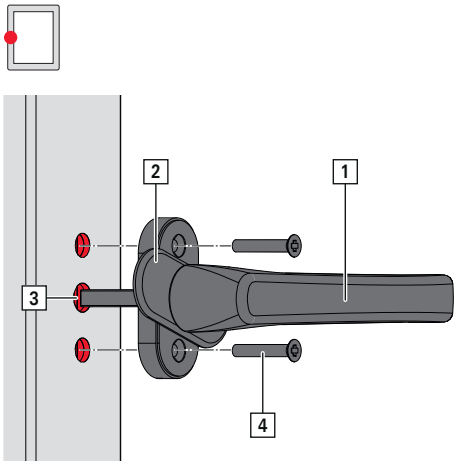

3. Insert the handle into the sash [3].

4. Fasten the handle with two screws [4].
   Overcome the resistance of the transport safety device while doing so.

5. Rotate the cover on the handle 90°.

8.9.2.3 Roto Line | window handle for geared-handle

Installing the handle

⇨ The connector must be installed → *from page 195*.

⇨ With a lockable handle, the SEC espagnolette protection must be installed → *from page 197*.

1. Move the handle to the turn position.

2. Place the espagnolette [1] on the sash from the inside of the sash.
   The fork [2] engages in the connector bolt [3].
   Fit the espagnolette support [4] from the outside of the sash on the sash to the espagnolette.

a. Align the espagnolette support on the drill holes.
b. Fasten the espagnolette with screws [5].

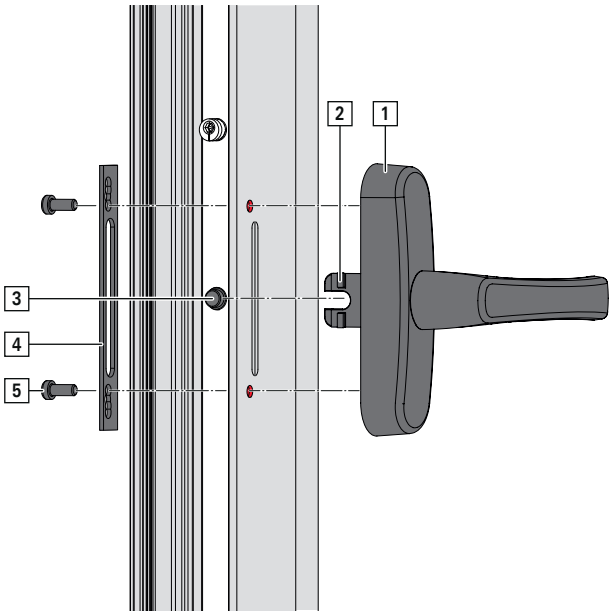

3. Turn the handle to check that it runs smoothly.

4. Move the handle to the closed position.

8.9.3 Turn lock and locking plate set

Installing the turn lock

1. Fasten the turn lock to the sash with two screws.
   Tool: T25 hexalobular socket

   INFO
   When installing the turn lock, pay attention to the position of the lock hook.

   Insert the key into the lock.

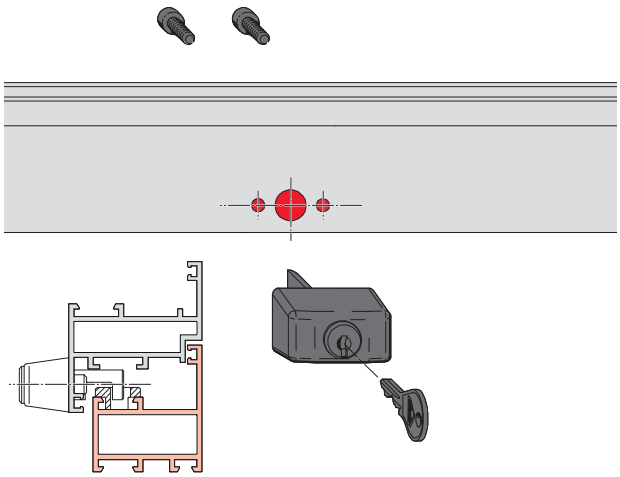

Installing the locking plate set

1. Fasten the locking plate to the frame with two screws.
   Tool: T25 hexalobular socket

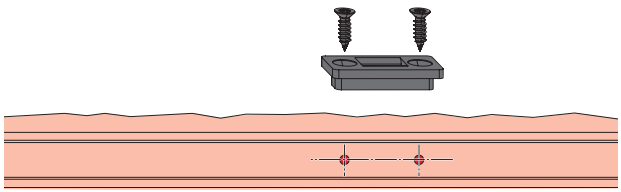

8.9.4 Bullet catch

Installing the bullet catch

⇨ First opening sash with corner drives.

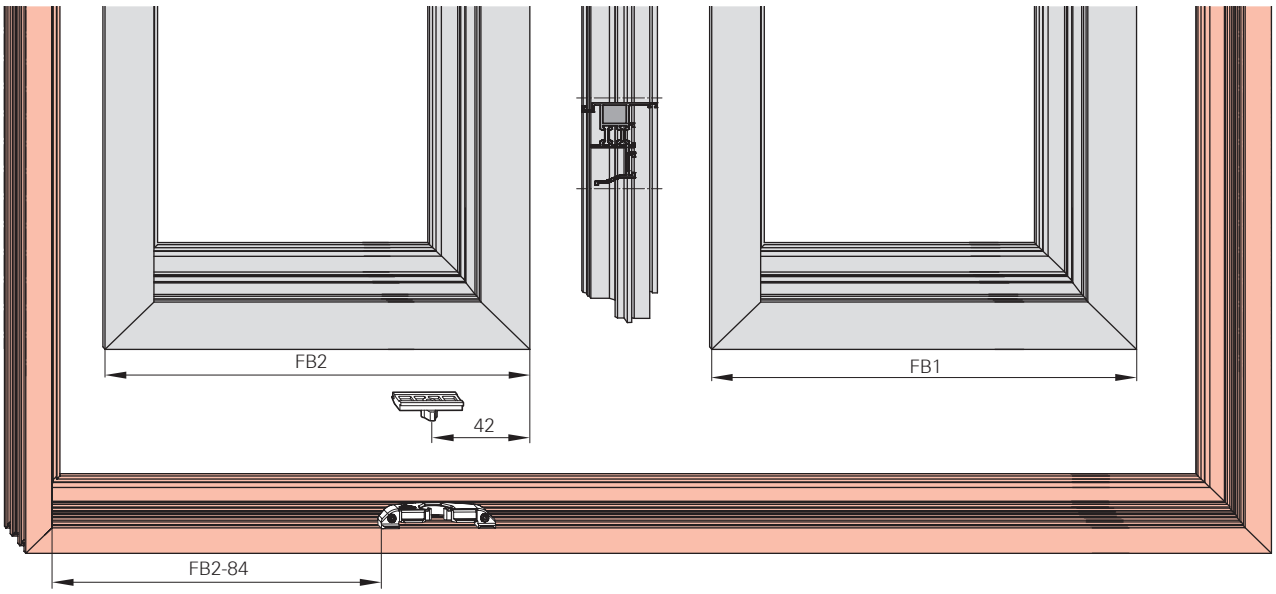

INFO
On floating-mullion elements, the bullet catch is intended for horizontal installation only.

Installing the balcony door bullet catch

⇨ Slot in connecting rod CR2 [1].

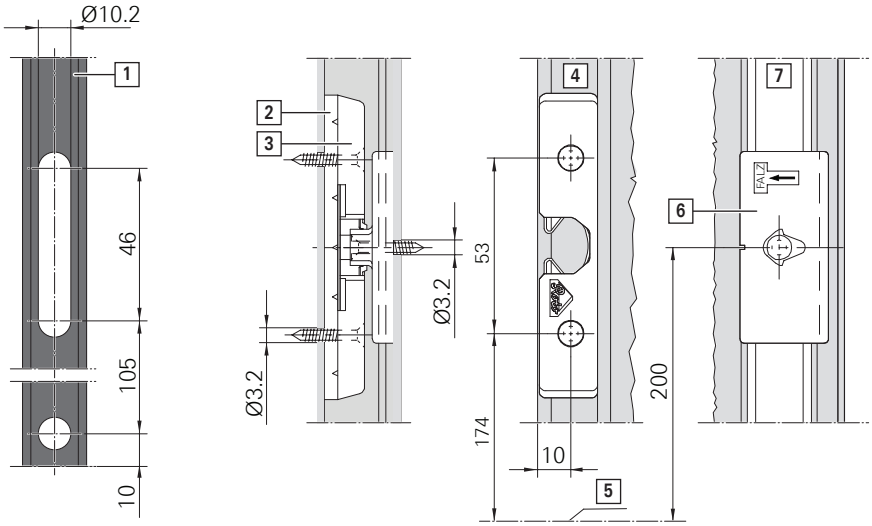

1. Clip the packer [2] into the balcony door bullet catch [3]. Fasten everything in the sash groove on the second opening sash [4] above the handle (handle centre [5]) with two screws.

2. Place the balcony door bullet-catch cam [6] in the first opening sash [7] above the handle on connecting rod CR2 and position on the sash groove.
   Fasten with one screw through the slot in the connecting rod.

INFO
The balcony door bullet catch is intended for vertical installation only. It can also be installed below the handle.

8.9.5 Turn restrictor

DANGER

Incorrect installation and loading poses a risk of death!

The sash can fall out if a different turn restrictor is used than the one specified in this document or if the end stops are improperly overloaded, for example by leaning on them.

- Use only the turn restrictors mentioned in this document.
- Do not lean against the window when it is open.

INFO

Comfort component

Not a security component in accordance with DIN EN 13126-5

Use turn restrictors → *3.4 "Minimum sash widths and heights" from page 37*

- When window sashes could hit against window reveals or aluminium supports uncontrollably (e.g. due to wind) in such a way as to damage or destroy the hardware or profiles.
- In public buildings.
- With opening angles up to max. 90°.

INFO

Check the end position of the sash rotation and correct it if necessary by moving the sash component slightly.

8.9.5.1 Turn restrictor with stop

INFO

For an opening angle of 94°, break either the right or left leg of the turn restrictor frame component before installation.

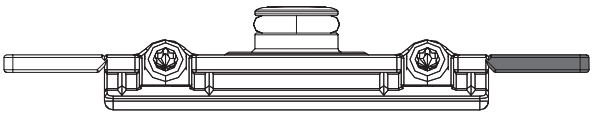

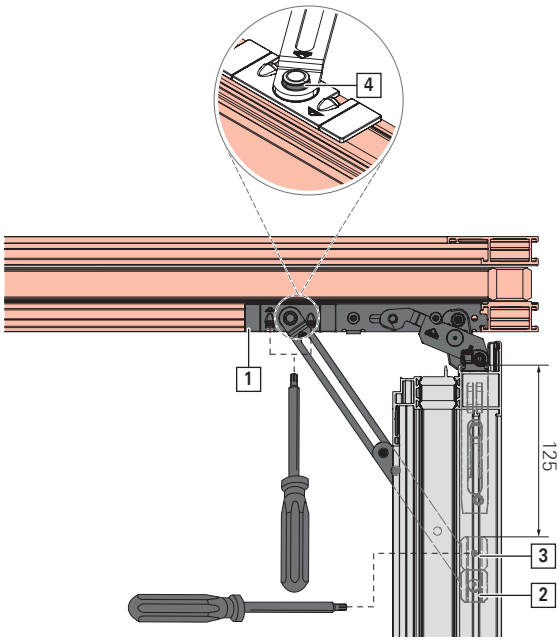

1. Position the frame bearing [1] in the frame groove directly adjacent to the pivot rest and fasten with two preassembled threaded pins so that it is at least flush.

   Tool: T10 hexalobular socket

   Torque: 2 – 2.5 Nm
2. Insert the sash bearing [2] in the sash groove and position it.
3. Insert the stop [3] in the sash groove, position it and fasten it with the preassembled threaded pin.

   Tool: T10 hexalobular socket

   Torque: 2 – 2.5 Nm
4. Push the turn restrictor arm above the rubber ring [4] on the frame bearing swivel pin.

INFO

Maximum opening width for the turn restrictor:

approx. 90°

8.9.5.2 Turn restrictor, braked, damped

1. Position the frame bearing in the frame groove directly adjacent to the pivot rest and fasten with two preassembled threaded pins so that it is at least flush [1].

   Tool: T10 hexalobular socket

   Torque: 2 – 2.5 Nm
2. Position the sash bearing in the sash groove and fasten with two screws [2].

   Tool: T10 hexalobular socket

   Torque: 2 – 2.5 Nm
3. Fasten the pull rod to the frame bearing using the mushroom-head screw provided [3].

   Tool: T10 hexalobular socket

   Torque: 2 – 2.5 Nm

INFO

Maximum opening width for the braked, damped turn restrictor:

Size 1: approx. 63°

Size 2: approx. 90°

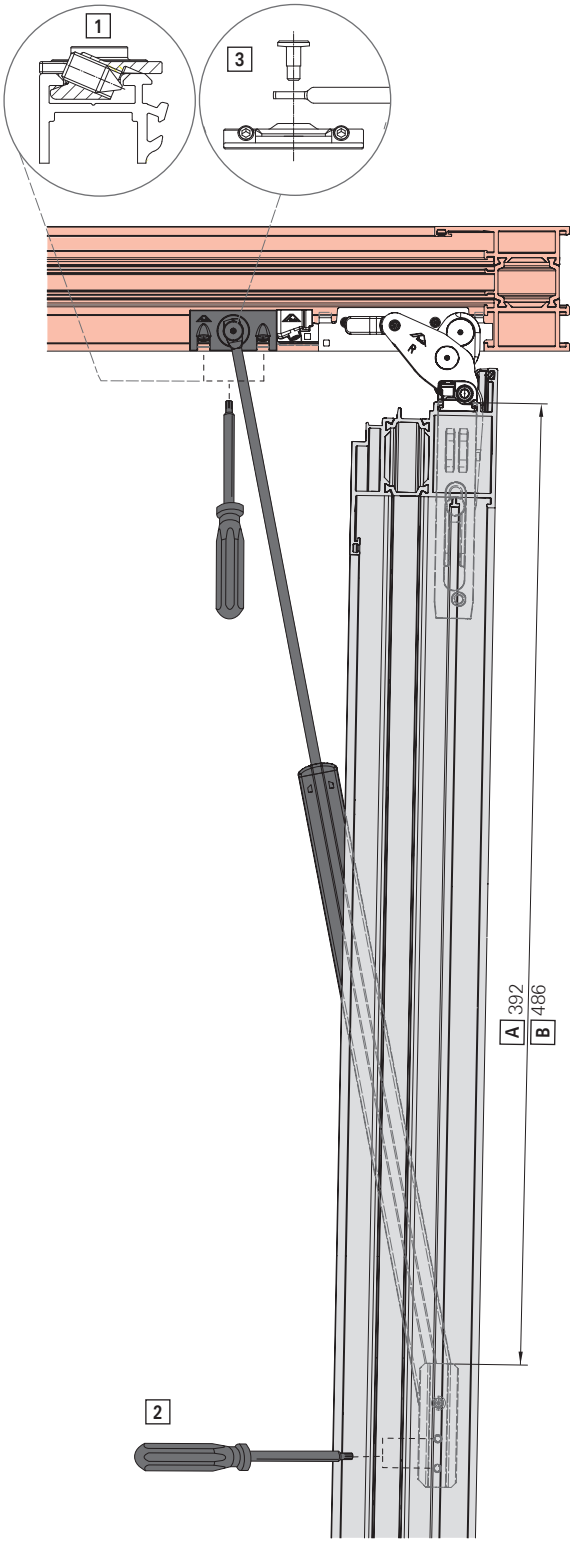

[A] Size 1
[B] Size 2

8.9.6 Night vent

INFO
Check all dimensions and functions during demo assembly prior to series production.

Installing the night vent

1. Prepare the connecting rod (see installation drawing of night vent without and with additional stay arm for T&T and TiSt).

   T&T = connecting rod CR3: drill the hole:

   1 x Ø $10.1^{+0,1}$ mm

   TiSt = connecting rod CR1 and CR2: drill holes:

   Each 1 x Ø $10.1^{+0.1}$ mm

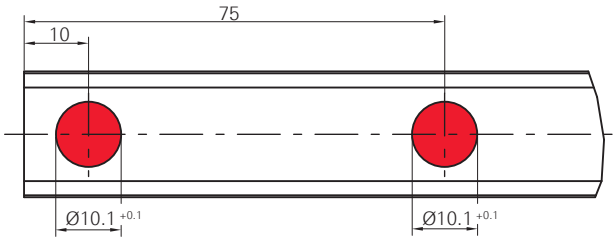

2. Secure the coupler component [1] with connecting rod [2], night vent locking cam [3] and one screw [4].

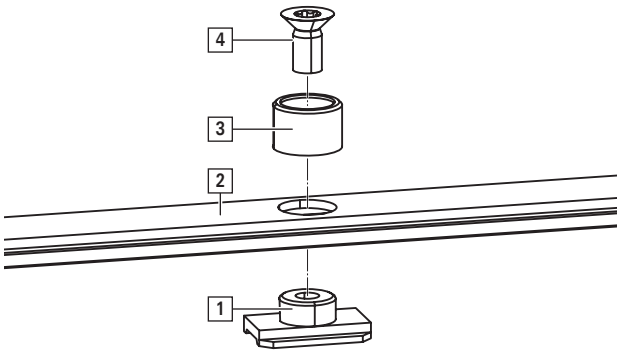

3. Insert the connecting rod with components (depending on the corresponding opening type and additional stay arm).

INFO
If the corner drive with mishandling device cannot be installed, a flush-encased gearbox with mishandling device must be fitted.

4. Drill the inside of the frame.
   Drill holes:
   2 x Ø 2.8 mm, at least 23 mm deep.

INFO
Note that the drill hole dimensions for T&T differ from those for TiSt.

[A] An additional night vent is recommended with SW ≥ 1000 mm (for TiSt)

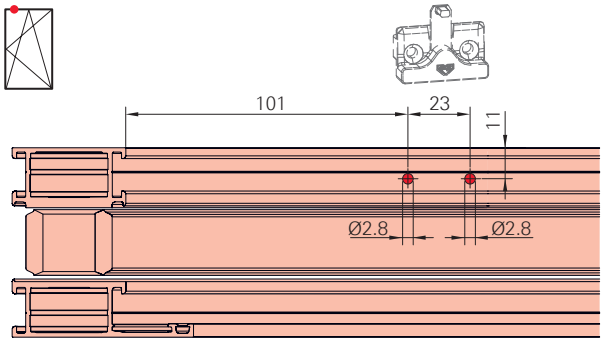

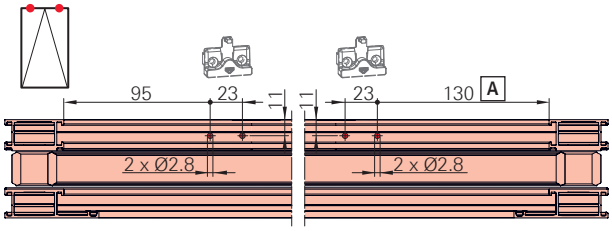

5. Fasten the night vent with two screws.
   Tool: T15 hexalobular socket
   Torque max. 1.0 Nm

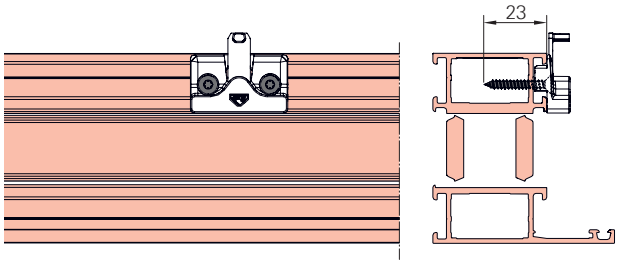

8.9.7 Load transfer

The spring in the load transfer permanently takes a load of approximately 60 to 80 kg off the pivot rest. For this, it is necessary to pre-tension the spring to a certain length. This applies regardless of the set height of the sash. The load

is relieved from the pivot rest over the entire service life of the hardware components, also taking account of subsidence and wear.

Installing the load transfer

INFO

Sash installation with load transfer

(sash weight 80 kg – 180 kg).

Do not use load transfer with sash weights ≤ 80 kg.

1. Insert the load transfer sash component (see installation drawing → *9 "Installation drawings" from page 273*) into the sash groove and screw it down with four preassembled threaded pins [A].

   Tool: T10 hexalobular socket

   Torque: 2 – 2.5 Nm

   Place the load transfer frame bearing onto the pivot rest baseplate without leaving a gap [B].

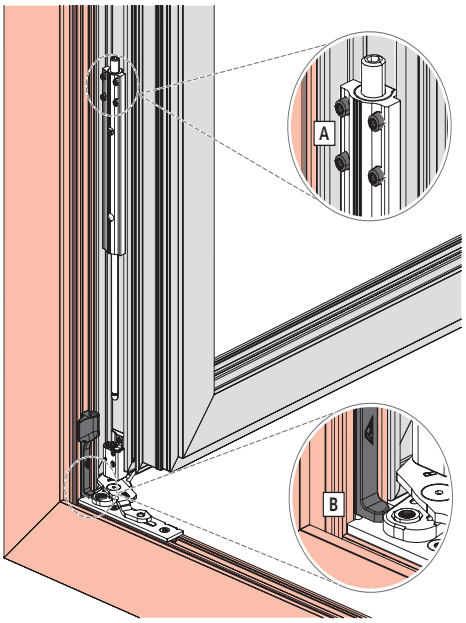

2. Screw down the load transfer frame bearing with two preassembled threaded pins [C].

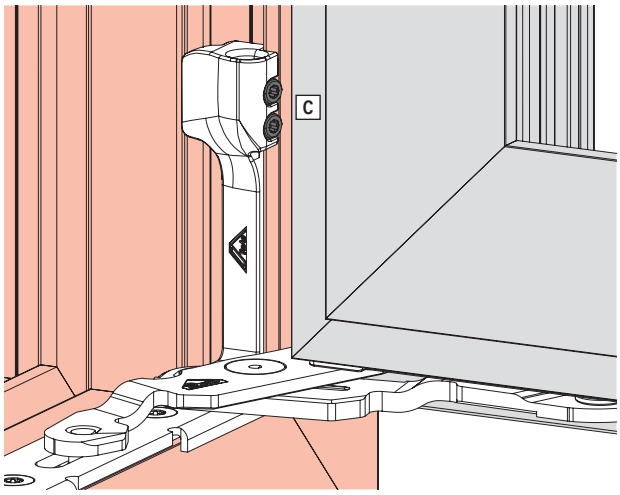

3. Position the load transfer support rod over the recess in the installed frame bearing [D].

   Use the adjusting screw [1] to lower the support rod clockwise, until it is securely seated in the recess of the frame bearing.

   Tool: hex key (with ball-shaped head [2]) size 4

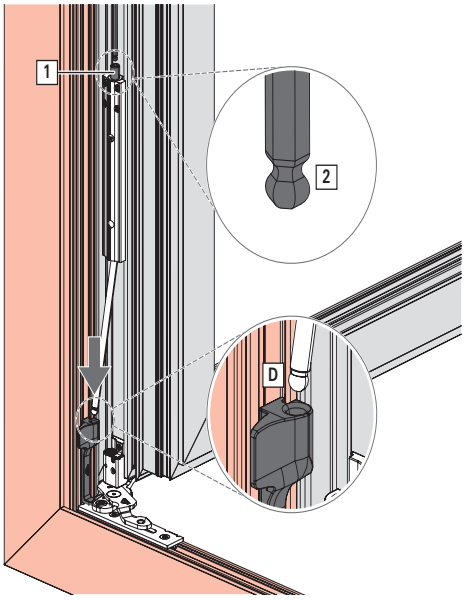

4. Adjust the load transfer pre-tensioning. To do so, use a 4 mm hex key to adjust the load transfer at the adjusting screw with the sash in the open position (90°).

   Adjust the adjusting screw so that a whole circle is produced by adding together the red and silver partial circles. Check at the view windows.

INFO

Only set and adjust the load transfer after the window has been installed on the construction site.

If the load transfer is adjusted before the window is installed, the window may only be transported upright and with the glazing installed.

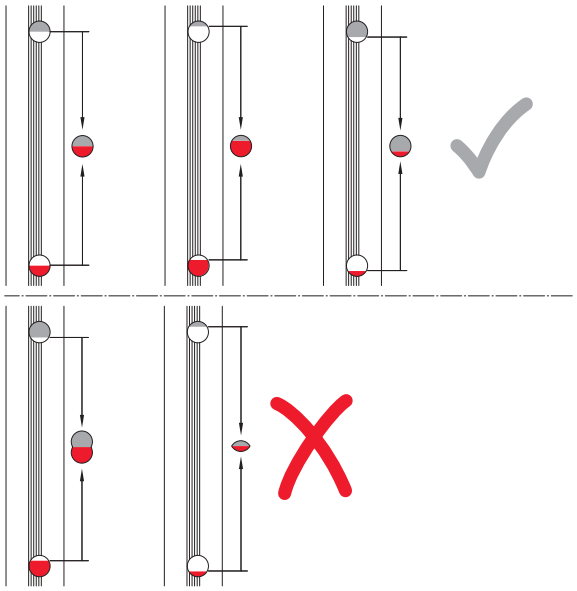

9 Installation drawings

9.1 Striker positions

9.1.1 Explanation

The following markings are used in the installation drawings to emphasise references and other elements:

Marking	Translation
Aufsatzgetriebe	Geared-handle
Ausgenommen sind die Abweichungen im Standard, die durch Zusatzbauteile oder durch höhen-/breitenabhängige Formeln gesteuert werden.	The exception is deviations in the standard version, which are controlled by additional components or by height- / width-dependent formulas.
Einlassgetriebe	Flush-encased gearbox
DF ohne EU	Turn-Only sash without corner drive
DF mit EU	Turn-Only sash with corner drive
DK	Tilt&Turn
FH	Sash height
GH	Handle height
GH <1/2 FH & FH > 1800: Position der SST (Verschlussseite) beim DF / DK / TF bis 130 kg	Handle height < 1/2 sash height and sash height > 1800: position of ST (locking side) for T-O / T&T / TF up to 130 kg
max	Maximum
min	Minimum
RHi	Frame height, internal
SST	Striker
Standardposition der SST (Verschlussseite) beim DF / DK / TF. (siehe auch Einbauzeichnungen)	Standard position of strikers (locking side) for T-O / T&T / TF (also see installation drawings).
Treibstangenstanzung Getriebesperre X=frei positionierbar (Vorschlag: 60 mm)	Connecting rod punched hole for espagnolette lock X=freely positionable (suggestion: 60 mm)

9.1.2 Standard

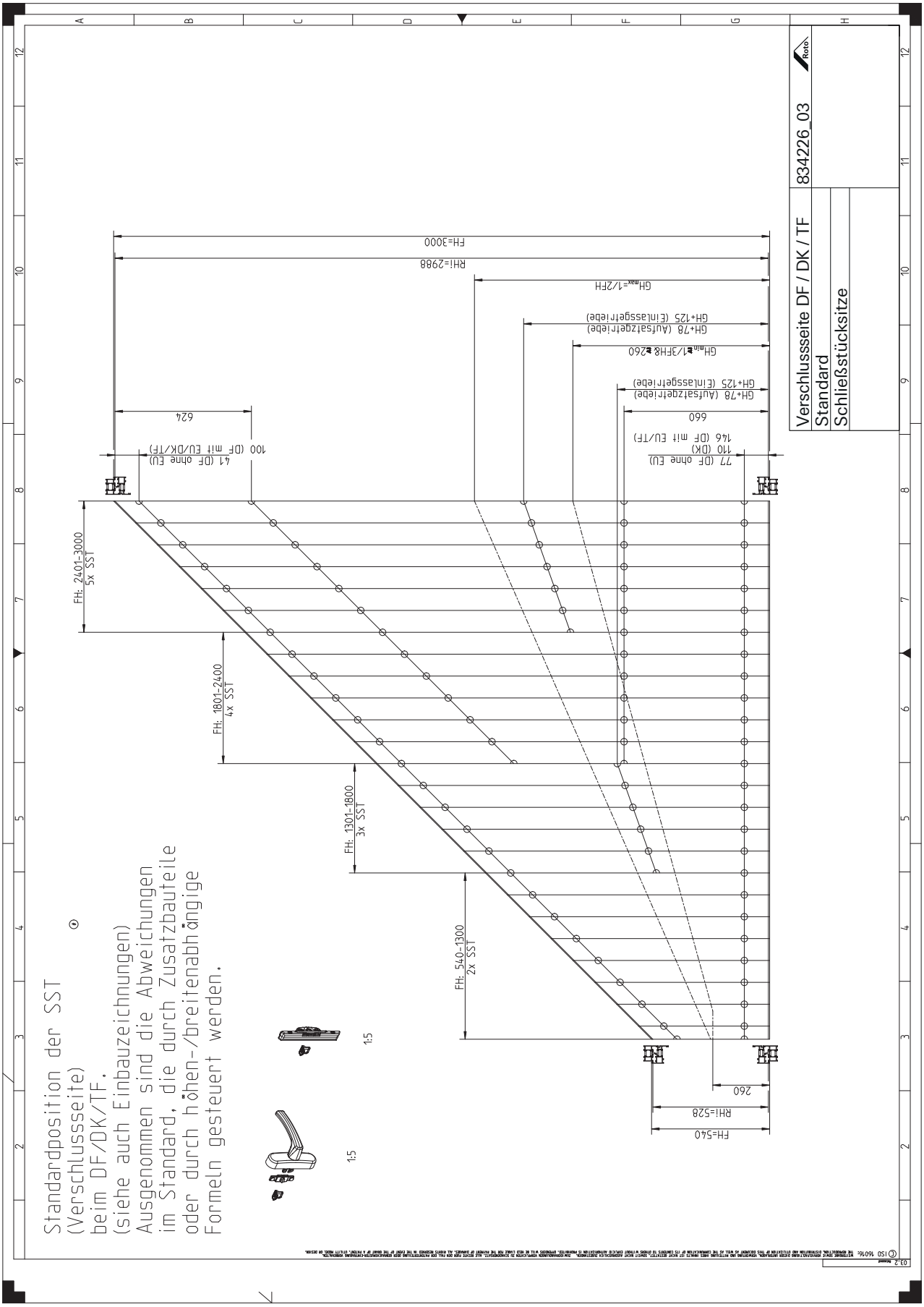

Standard – depending on HH and SH

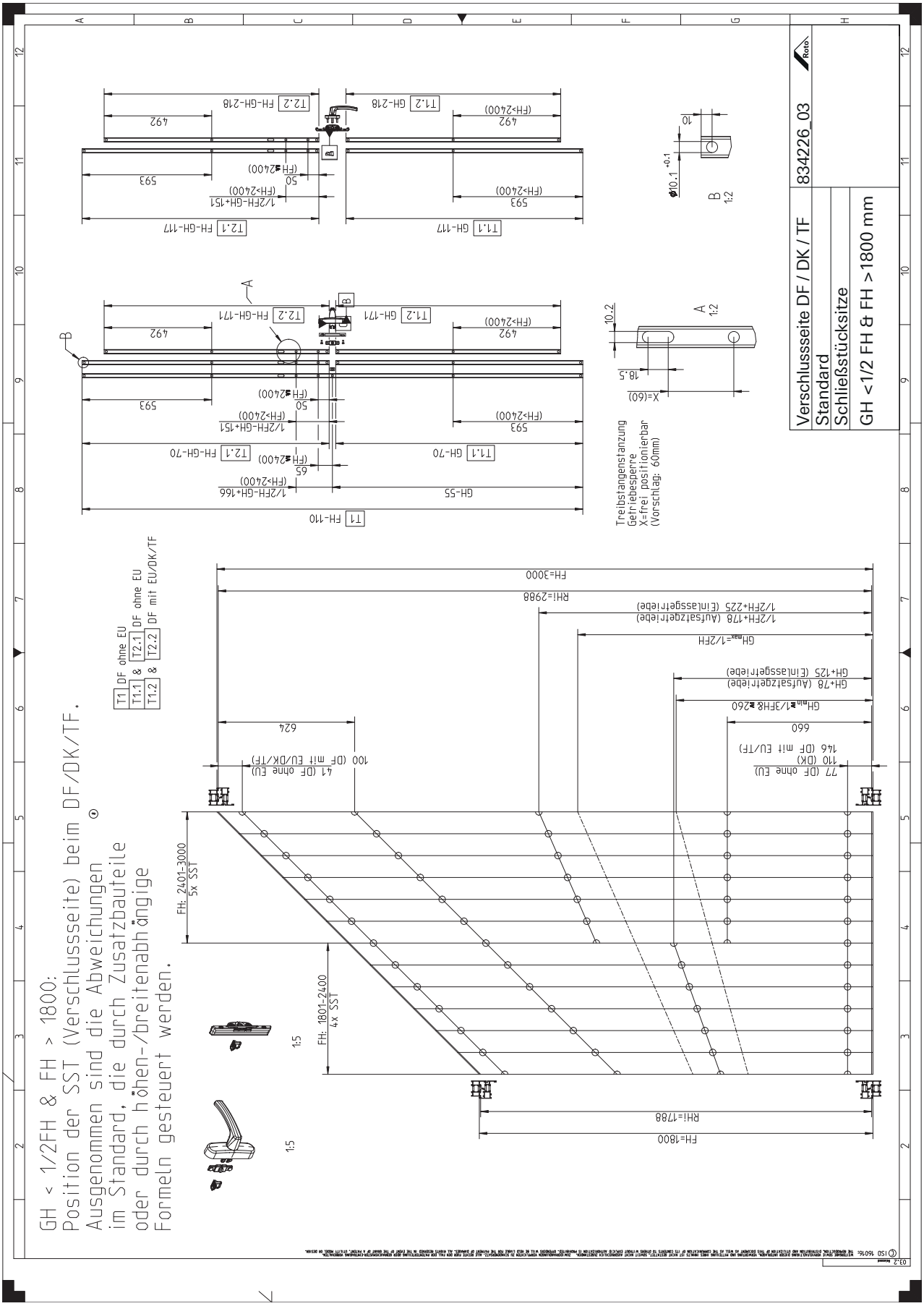

9.2 Tilt&Turn hardware

9.2.1 Explanation

The following markings are used in the installation drawings to emphasise references and other elements:

Marking	Translation
Abweichungen Abstand RC SST mit DB	Deviations from distance SEC striker with turn restrictor
Abweichung der Werte siehe Tabelle	Refer to the table for deviations in the values
Abweichung Treibstange T5/Abstand RC SST	Deviation from connecting rod CR5 / distance SEC striker
Aufsatzgetriebe	Geared-handle
Ausführung	Version
Ausführungsbeispiel Roto (geprüft): SH-Schließstück für Kipplüftung (TiltSafe) mit Einleger im Profil befestigen. Verwendung einer Senkkopf-Einwegschraube mit 90° Senkung wird empfohlen. Alle Schrauben müssen mindestens in 10 mm Wandstärke einges-chraubt werden.	Roto design example (tested): secure the SEC striker for tilt ventilation (TiltSafe) with inlay in the profile. The use of a countersunk-head single-use screw with 90° countersink is recommended. All screws must be inserted up to a wall thickness of at least 10 mm.
Axer	Sash stay
Bauteil mit Blattfeder muss griffseitig montiert werden.	Component with leaf spring must be installed on the handle side.
Beim Verbauen der Zweitschere muss bei der Falzluftreduzierung, entsprechend der Drehrichtung des Fluegels, der rechte bzw. linke Steg abgetrennt werden.	When fitting the additional stay arm, the right or left profile leg must be detached for rebate-clearance reduction depending on the direction of rotation of the sash.
DB Gr. ...	Turn restrictor size ...
DB ungebr.	Turn restrictor, unbraked (with stop)
Die Angaben dienen nur zur ungefaehren Positionierung.	The information is for approximate positioning only.
Drehkipp-Beschlag	Tilt&Turn hardware
Einlassgetriebe	Flush-encased gearbox
Empfehlungen seitens Roto : je nach Profilstabilitaet bzw. Beanspru-chungsgruppe des Profils muessen / koennen die Mittelvers-chluesse frueher / spaeter gesetzt werden.	Recommendations from Roto: depending on the profile stability or profile loading group, the centre locks must / can be put in place at an earlier / later point.
FB	Sash width
FH	Sash height
Garnitur-Positionierung	Set positioning
generell bei allen Koppelstellen, wenn nichts anderes angegeben	Generally for all coupling points, unless otherwise specified
GH	Handle height
kg	Kilograms
mit DB	With turn restrictor
ohne DB	Without turn restrictor
RBi	Frame width, internal
RC2	RC 2
RC3	RC 3
RHi	Frame height, internal
SAP-Nr.	Material number
Schließstücksitze	Striker positions
SH-Schließstück für Kipplüftung besitzt R/L Kennzeichnung. In einem Fenster werden 3 Stück verbaut.	The security striker for tilt ventilation has a right / left marking. Three units are installed in a window.
SST	Striker
Standard	Standard
T	Connecting rod
Treibstangenmaße	Connecting rod
zusätzliche Hinweise Drehbegrenzer (DB)	Additional information on the turn restrictor (TR)
Zweitschere	Additional stay arm

9.2.2 T&T | 80 kg

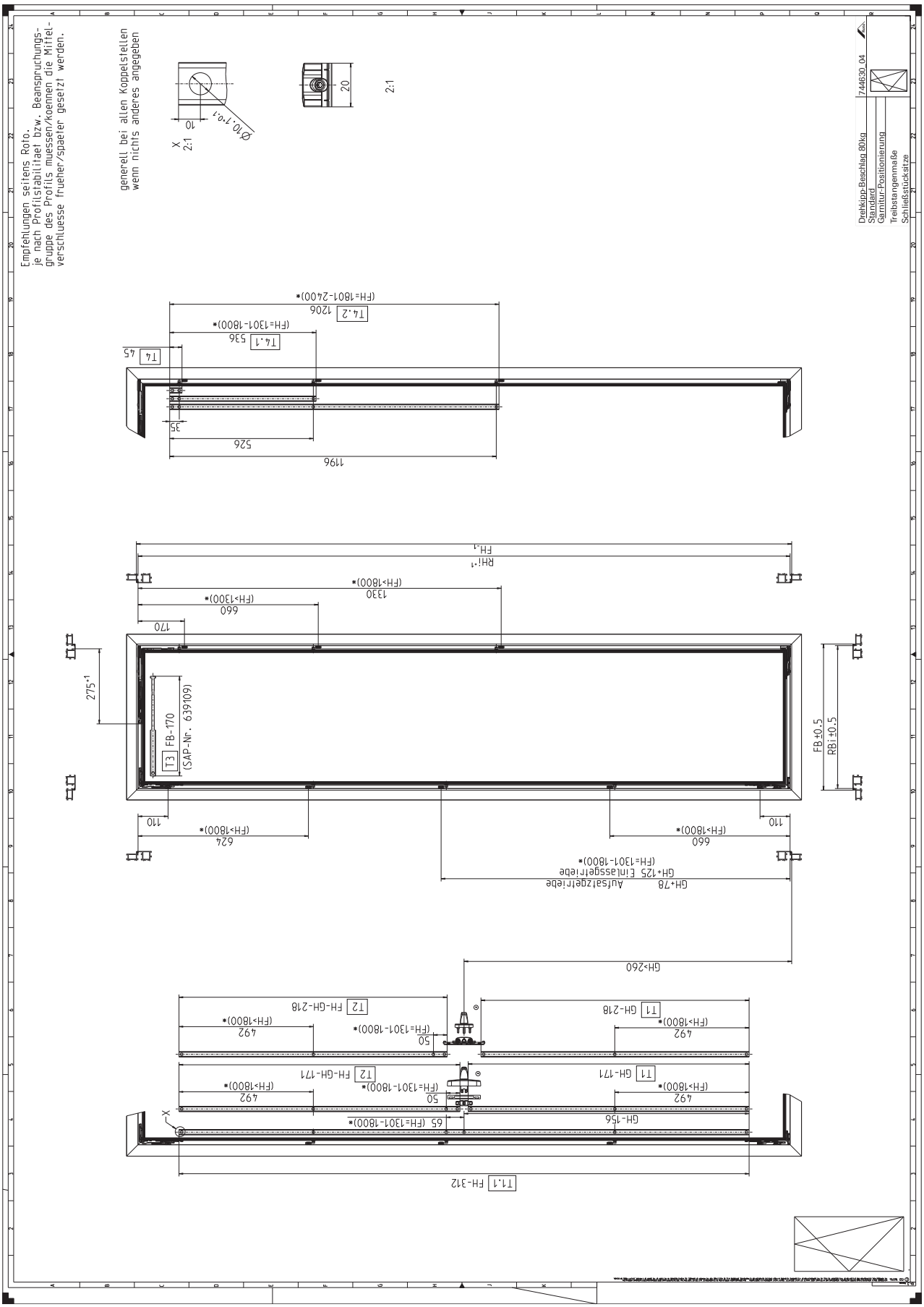
Empfehlungen seitens Roto.
je nach Profilstabilitaet bzw. Beanspruchungs-
gruppe des Profils muessen/koennen die Mittel-
verschluesse frueher/spaeter gesetzt werden.
generell bei allen Koppelstellen
wenn nichts anderes angegeben
Drehkipp-Beschlag 80kg
Standard
Garnitur-Positionierung
Treibstangenmaße
Schließstücksitze
744630_04
Ø10,7±0,1
10
20
2:1
(FH=1801-2400)*
T4.2 1206
(FH=1301-1800)*
T4.1 536
T4 45
35
526
1196
RH:1
FH.1
(FH>1800)*
1330
(FH>1300)*
660
170
275-1
T3 FB-170
(SAP-Nr. 639409)
FB±0.5
RB1±0.5
110
624
(FH>1800)*
660
(FH>1800)*
110
GH+78 Aufsatzgetriebe
GH+125 Einlassgetriebe
(FH=1301-1800)*
GH>260
T2 FH-GH-218
492
(FH>1800)*
50
(FH=1301-1800)*
T1 GH-218
492
(FH>1800)*
T2 FH-GH-171
492
(FH>1800)*
50
(FH=1301-1800)*
T1 GH-171
492
(FH>1800)*
65 (FH=1301-1800)*
GH-156
T1.1 FH-312

9.2.3 T&T | 150 kg

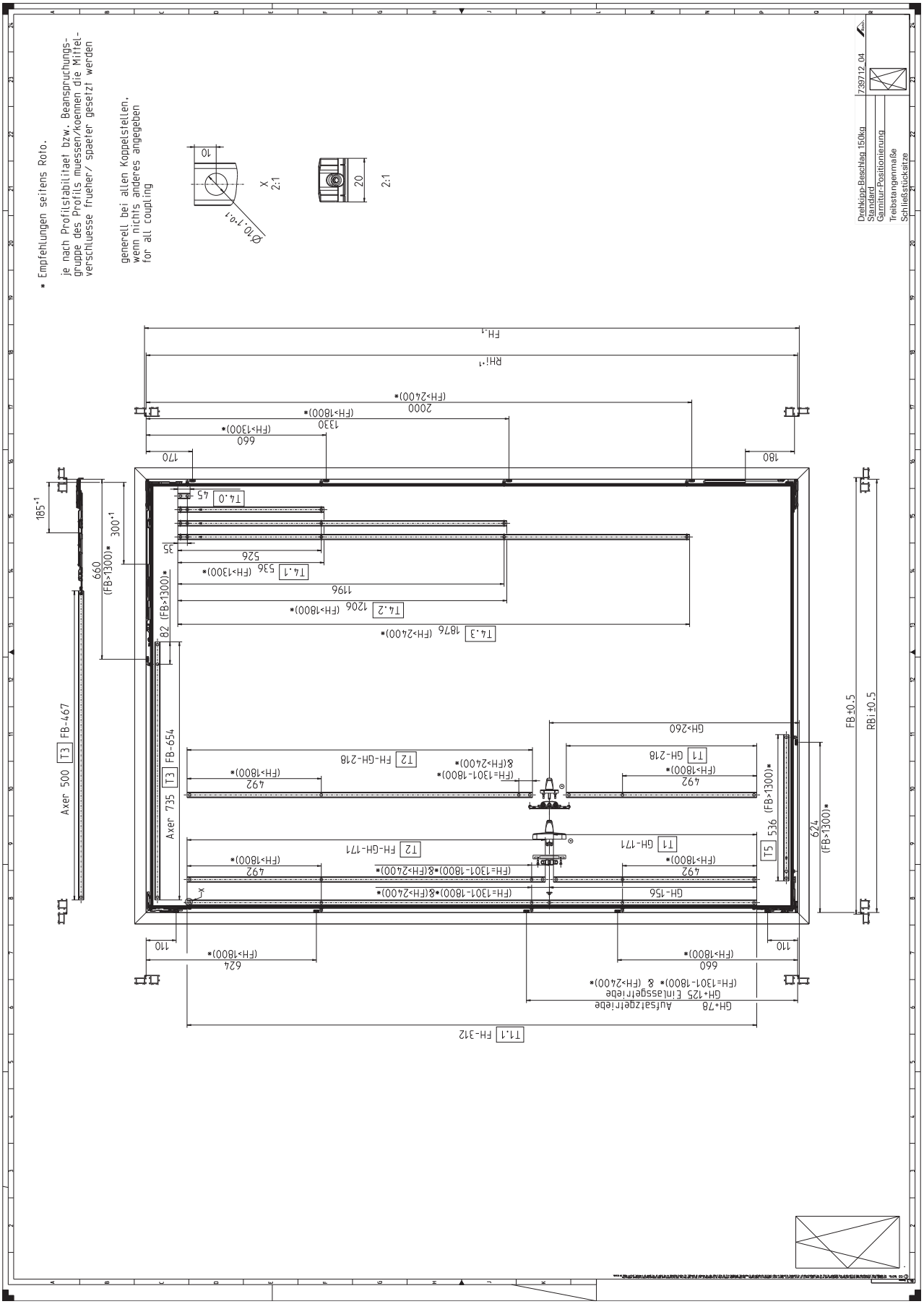
* Empfehlungen seitens Roto.
je nach Profilstabilitaet bzw. Beanspruchungs-
gruppe des Profils muessen/koennen die Mittel-
verschluesse frueher/ spaeter gesetzt werden
generell bei allen Koppelstellen,
wenn nichts anderes angegeben
for all coupling
Drehkipp-Beschlag 150kg
Standard
Garnitur-Positionierung
Treibstangenmaße
Schließstücksitze
729712_04
FH-1
RHi+1
2000 (FH>2400)*
1330 (FH>1800)*
660 (FH>1300)*
170
180
T4.0 45
185+1
300+1
660 (FB>1300)*
35
526
T4.1 536 (FH>1300)*
1196
T4.2 1206 (FH>1800)*
T4.3 1876 (FH>2400)*
82 (FB>1300)*
Axer 500 T3 FB-467
Axer 735 T3 FB-654
GH>260
T2 FH-GH-218
&(FH>2400)*
(FH=1301-1800)*
492 (FH>1800)*
T1 GH-218
T2 FH-GH-171
T1 GH-171
GH-156
T5 536 (FB>1300)*
624 (FB>1300)*
FB±0.5
RBi±0.5
110
624 (FH>1800)*
660 (FH>1800)*
GH+78 Aufsatzgetriebe
GH+125 Einlassgetriebe
(FH=1301-1800)* & (FH>2400)*
T1.1 FH-312

9.2.4 T&T | 150 kg | RC 2

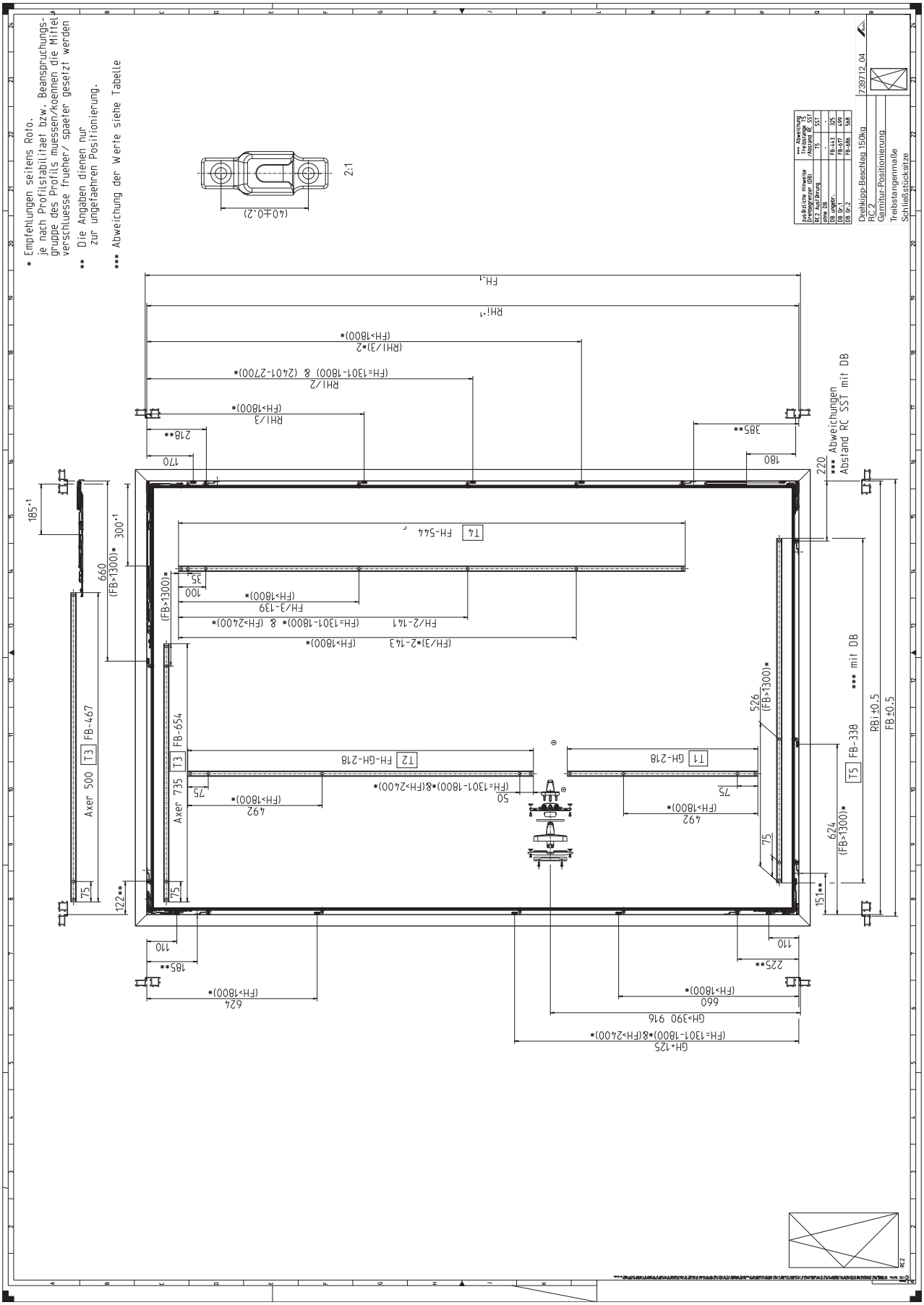

9.2.5 T&T | 150 kg | RC 3

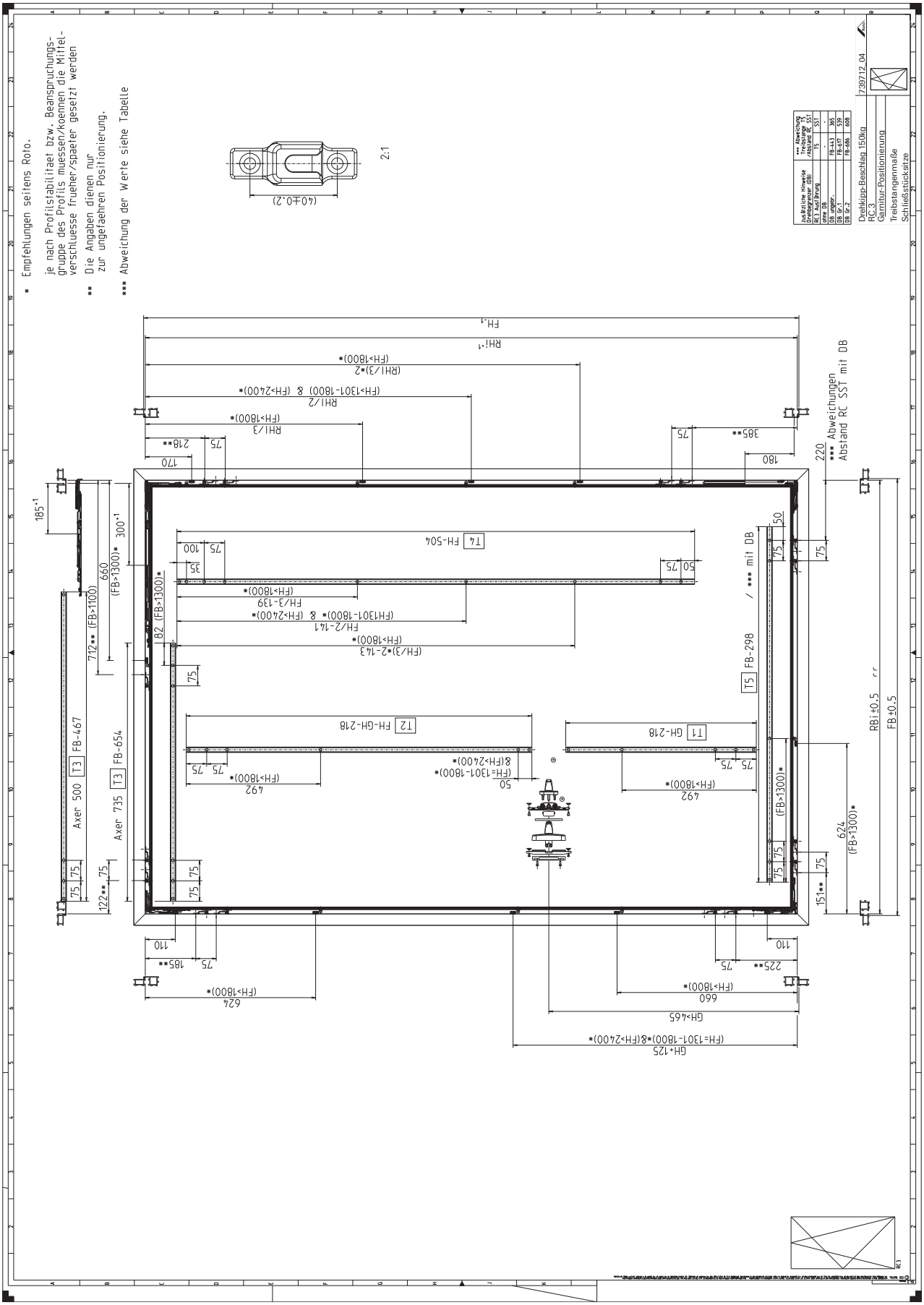

9.2.6 T&T additional stay arms | 150 kg

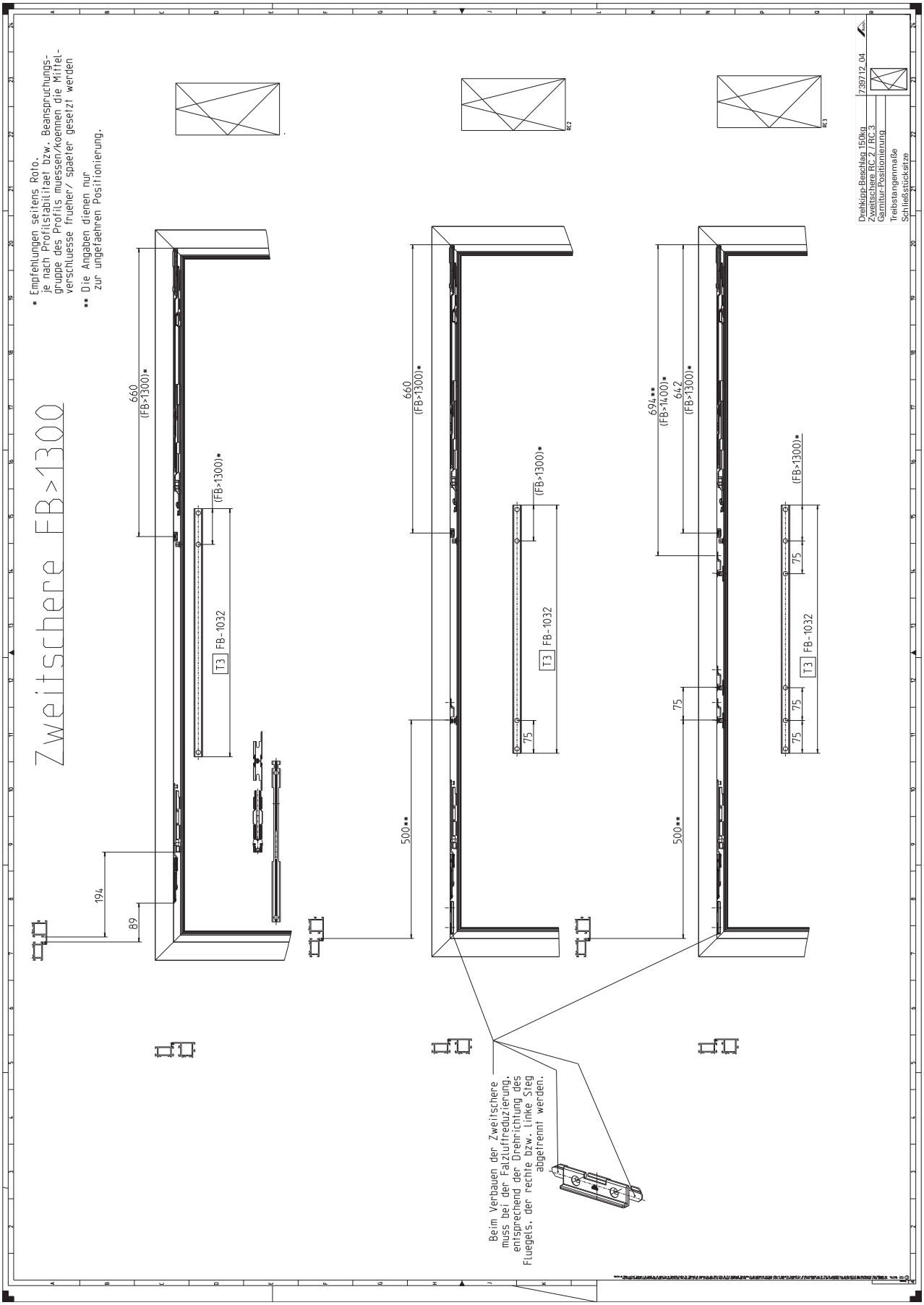

9.2.7 T&T | 150 kg | TiltSafe | RC 2

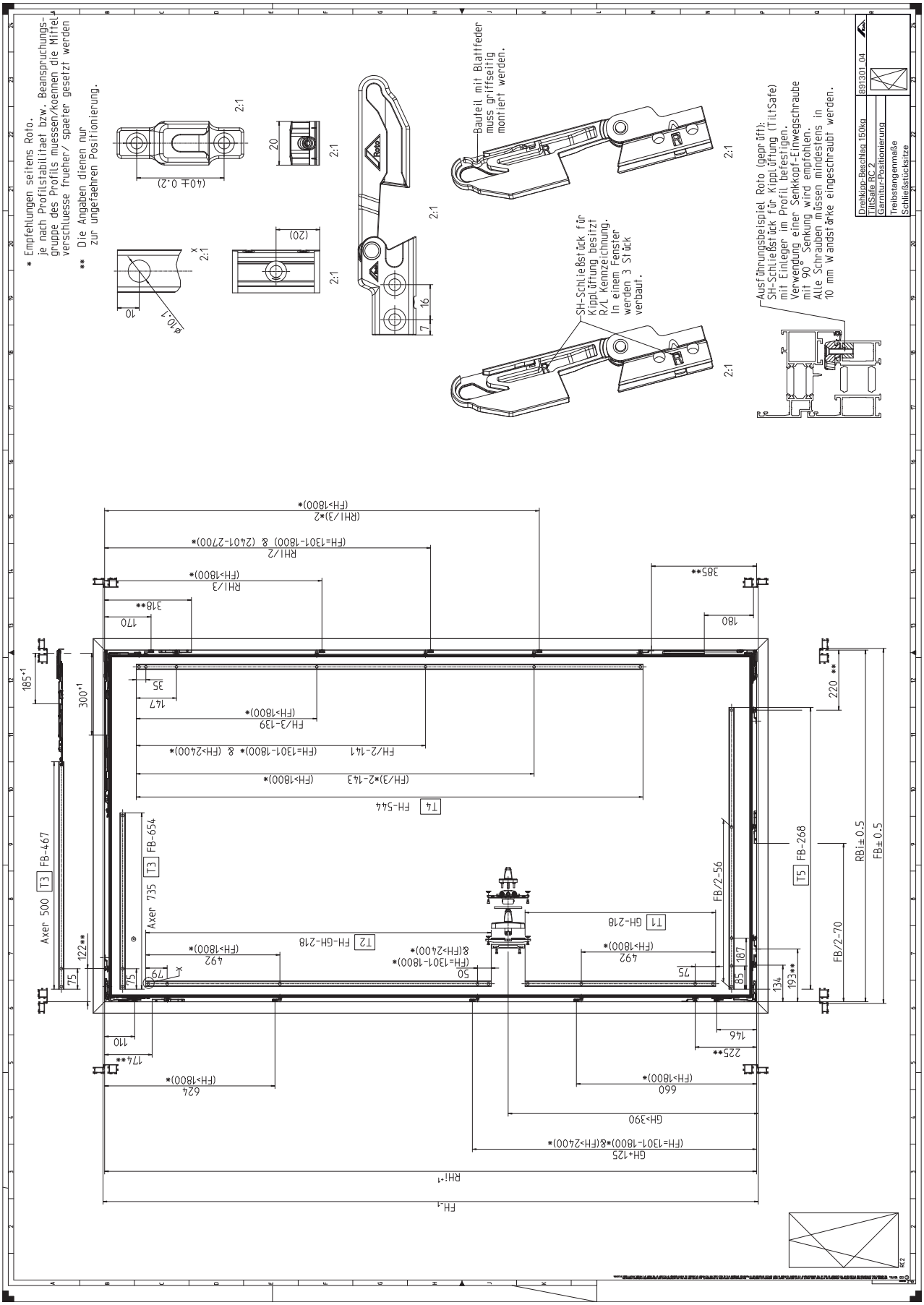

9.2.8 T&T | 180 kg

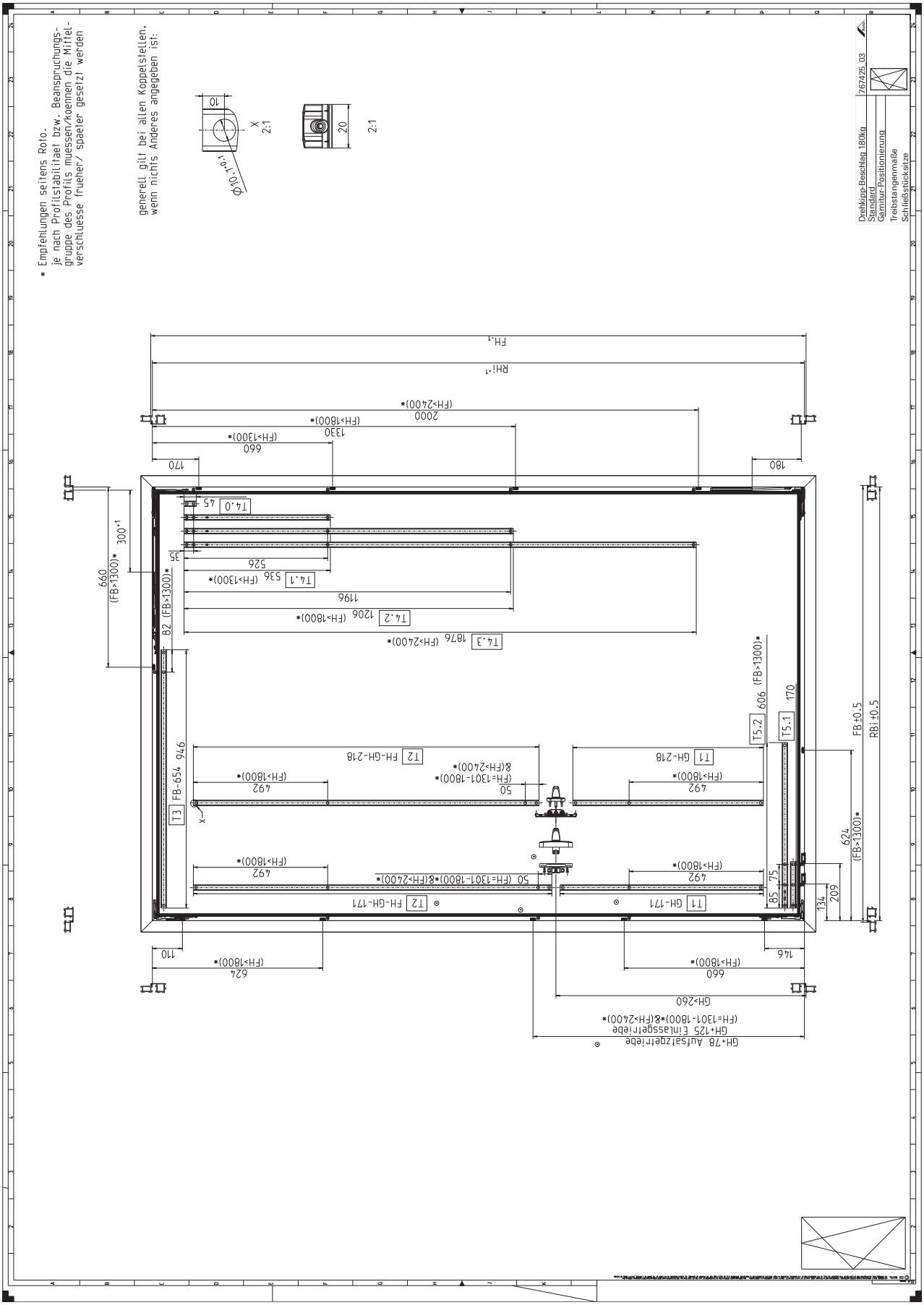
* Empfehlungen seitens Roto.
je nach Profilstabilitaet bzw. Beanspruchungs-
gruppe des Profils muessen/koennen die Mittel-
verschluesse frueher/ spaeter gesetzt werden
generell gilt bei allen Koppelstellen,
wenn nichts Anderes angegeben ist:
Drehkipp-Beschlag 180kg
Standard
Garnitur-Positionierung
Treibstangenmaße
Schließstückstitze
767425 03
FH-1
RH-1
(FH>2400)*
2000
(FH>1800)*
1330
(FH>1300)*
660
170
180
T4.0
45
300-1
35
526
T4.1
536
(FH>1300)*
1196
T4.2
1206
(FH>1800)*
T4.3
1876
(FH>2400)*
660
(FB>1300)*
82
(FB>1300)*
T5.2
606
(FB>1300)*
T5.1
170
FB±0.5
RB±0.5
T3
FB-654
946
T2
FH-GH-218
T1
GH-218
492
(FH>1800)*
50
(FH=1301-1800)*
&(FH>2400)*
492
(FH>1800)*
492
(FH>1800)*
50 (FH=1301-1800)*&(FH>2400)*
T2
FH-GH-171
T1
GH-171
85
75
134
209
624
(FB>1300)*
110
624
(FH>1800)*
146
660
(FH>1800)*
GH>260
GH+78 Aufsatzgetriebe
GH+125 Einlassgetriebe
(FH=1301-1800)*&(FH>2400)*

9.2.9 T&T | 180 kg | RC 2

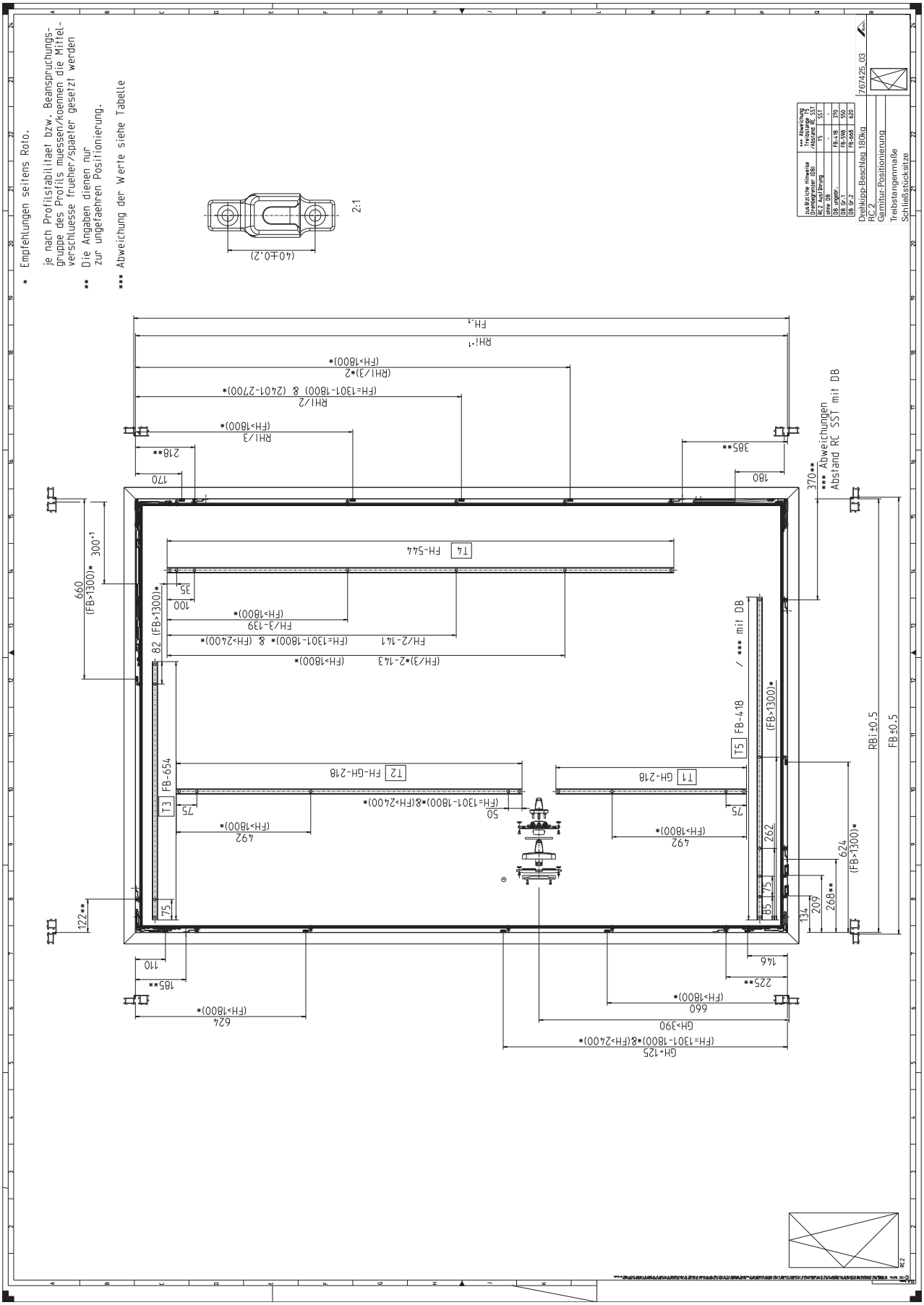

9.2.10 T&T | 180 kg | RC 3

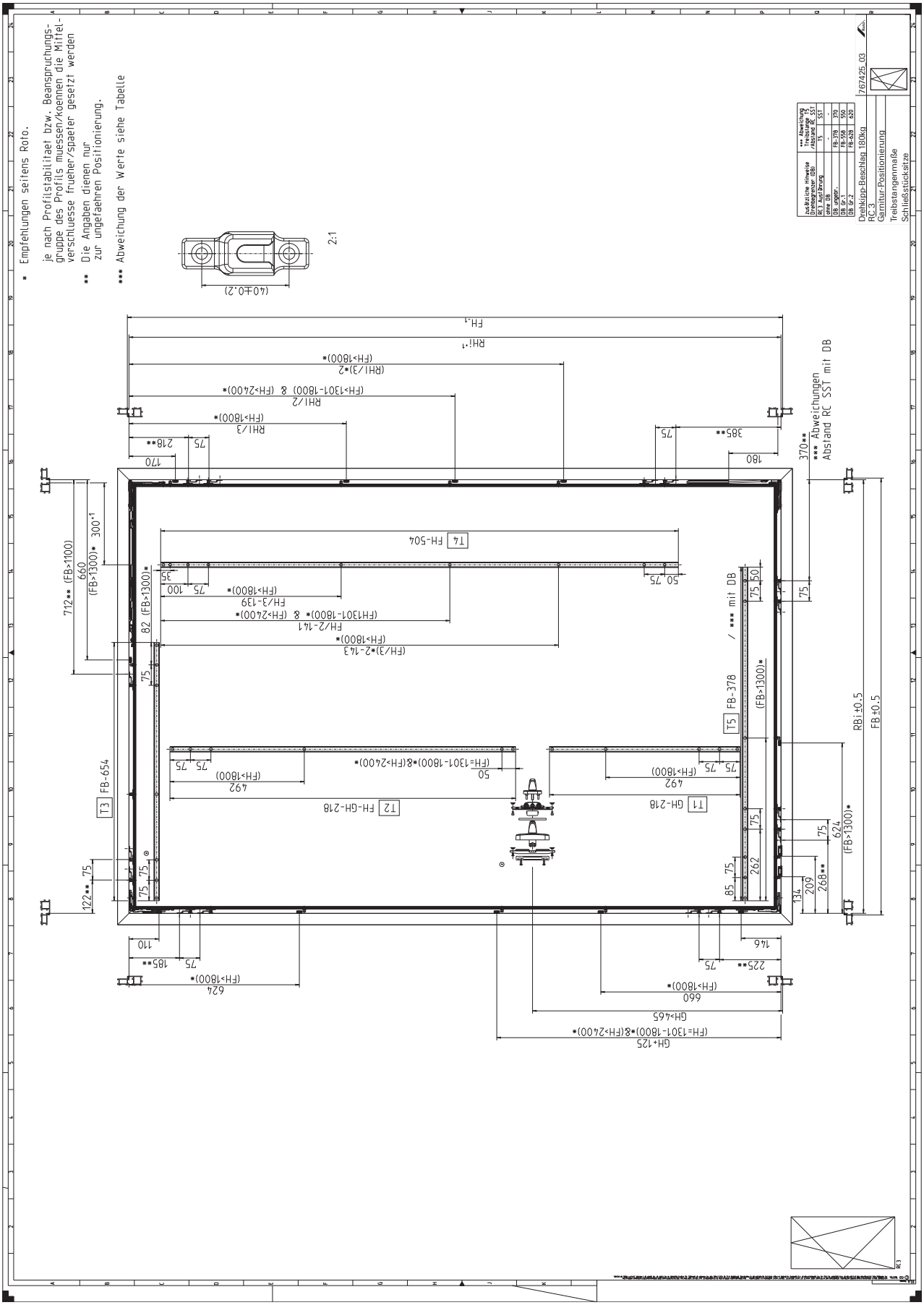

9.2.11 T&T additional stay arms | 180 kg

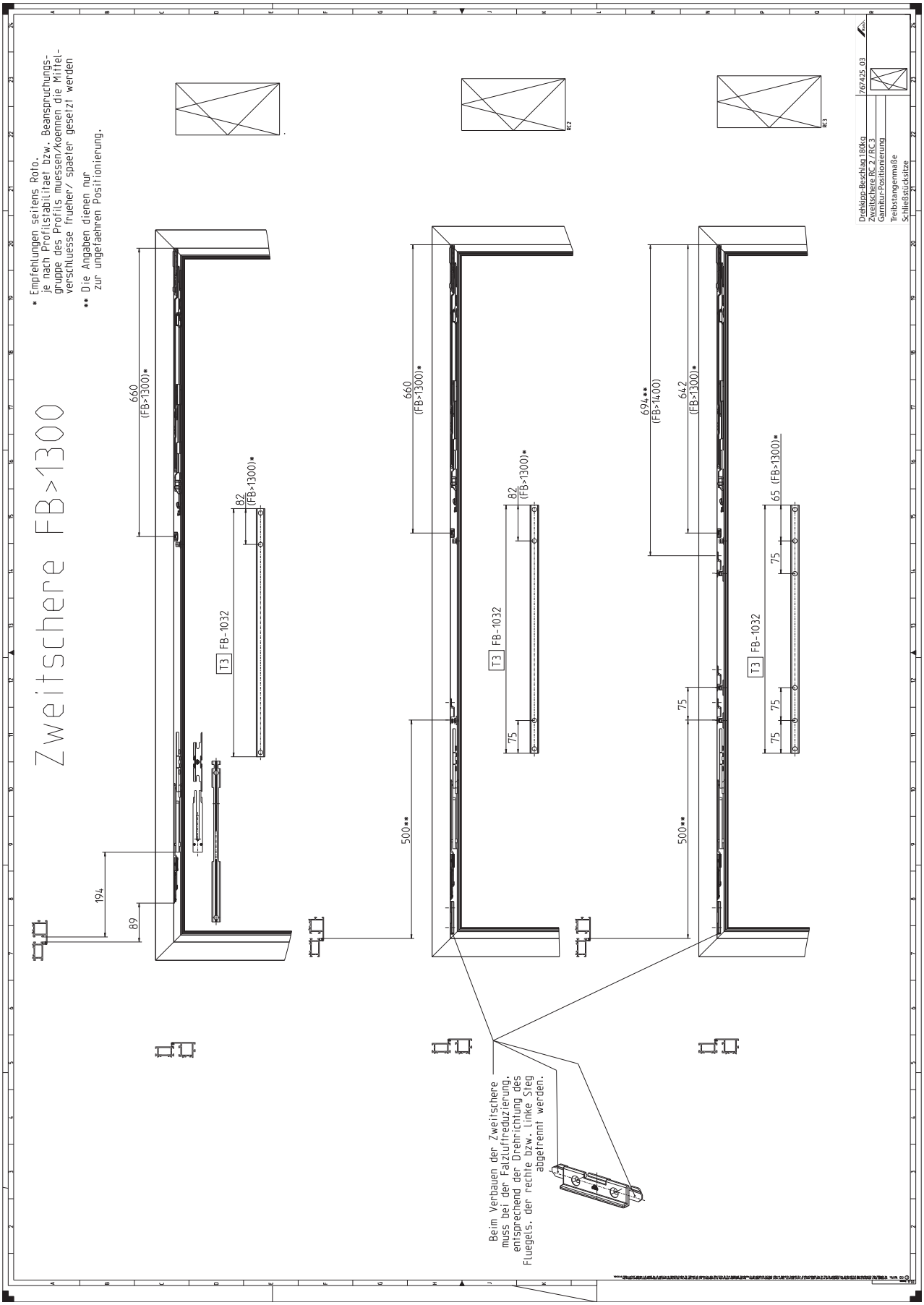

9.3 TiltFirst hardware

9.3.1 Explanation

The following markings are used in the installation drawings to emphasise references and other elements:

Marking	Translation
Abweichungen Abstand RC SST mit DB	Deviations from distance SEC striker with turn restrictor
Abweichung der Werte siehe Tabelle	Refer to the table for deviations in the values
Abweichung Treibstange T5/Abstand RC SST	Deviation from connecting rod CR5 / distance SEC striker
Aufsatzgetriebe	Geared-handle
Ausführung	Version
Axer	Sash stay
Beim Verbauen der Zweitschere muss bei der Falzluftreduzierung, entsprechend der Drehrichtung des Fluegels, der rechte bzw. linke Steg abgetrennt werden.	When fitting the additional stay arm, the right or left profile leg must be detached for rebate-clearance reduction depending on the direction of rotation of the sash.
DB Gr. ...	Turn restrictor size ...
DB ungebr.	Turn restrictor, unbraked (with stop)
Die Angaben dienen nur zur ungefaehren Positionierung.	The information is for approximate positioning only.
Einlassgetriebe	Flush-encased gearbox
Empfehlungen seitens Roto : je nach Profilstabilitaet bzw. Beanspruchungsgruppe des Profils muessen / koennen die Mittel-verschluesse frueher / spaeter gesetzt werden.	Recommendations from Roto: depending on the profile stability or profile loading group, the centre locks must / can be put in place at an earlier / later point.
FB	Sash width
FH	Sash height
Garnitur-Positionierung	Set positioning
generell bei allen Koppelstellen, wenn nichts anderes angegeben	Generally for all coupling points, unless otherwise specified
GH	Handle height
kg	Kilograms
mit DB	With turn restrictor
ohne DB	Without turn restrictor
RBi	Frame width, internal
RC2	RC 2
RC3	RC 3
RHi	Frame height, internal
Schließstücksitze	Striker positions
SST	Striker
Standard	Standard
T	Connecting rod
TiltFirst/Kipp-Beschlag	TiltFirst hardware / Tilt-Only hardware
Treibstangenstanzung Getriebesperre	Connecting rod punched hole for espagnolette lock
Treibstangenmaße	Connecting rod dimensions
zusätzliche Hinweise Drehbegrenzer (DB)	Additional information on the turn restrictor (TR)
X = frei positionierbar (Vorschlag: 60 mm)	X = freely positionable (suggestion: 60 mm)
Zweitschere	Additional stay arm

9.3.2 TF / TiSs | 150 kg

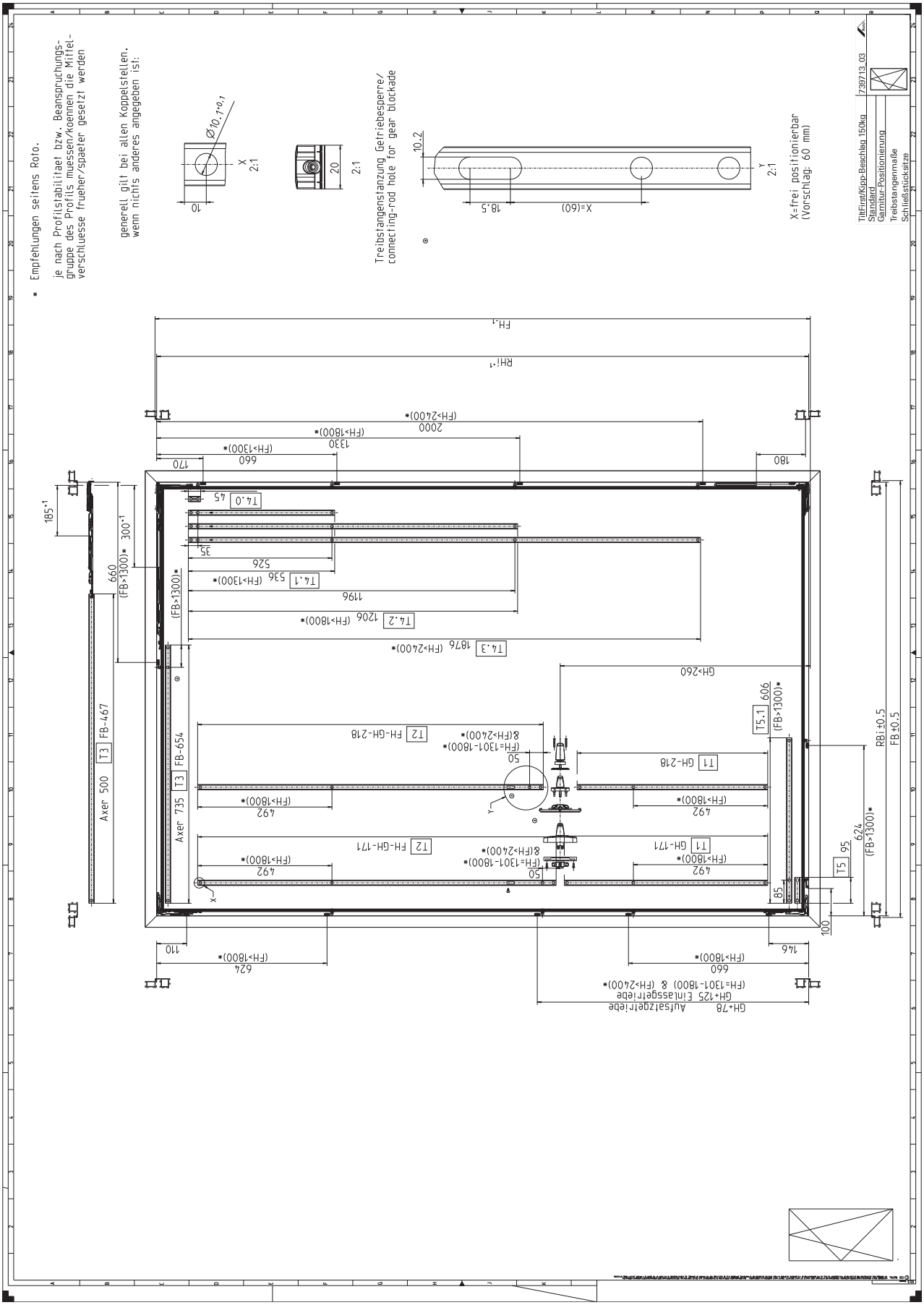

9.3.3 TF / TiSs | 150 kg | RC 2

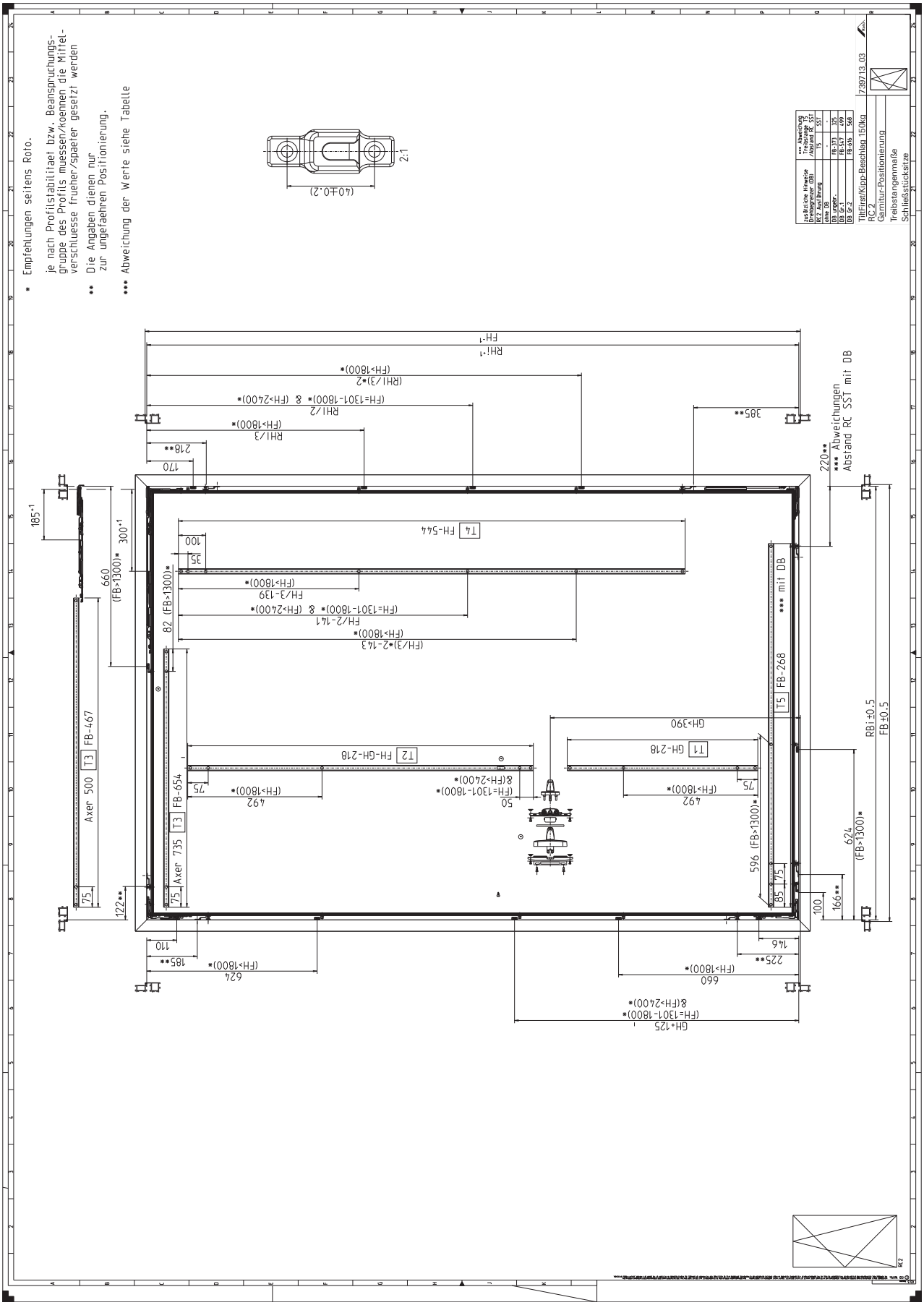

9.3.4 TF / TiSs | 150 kg | RC 3

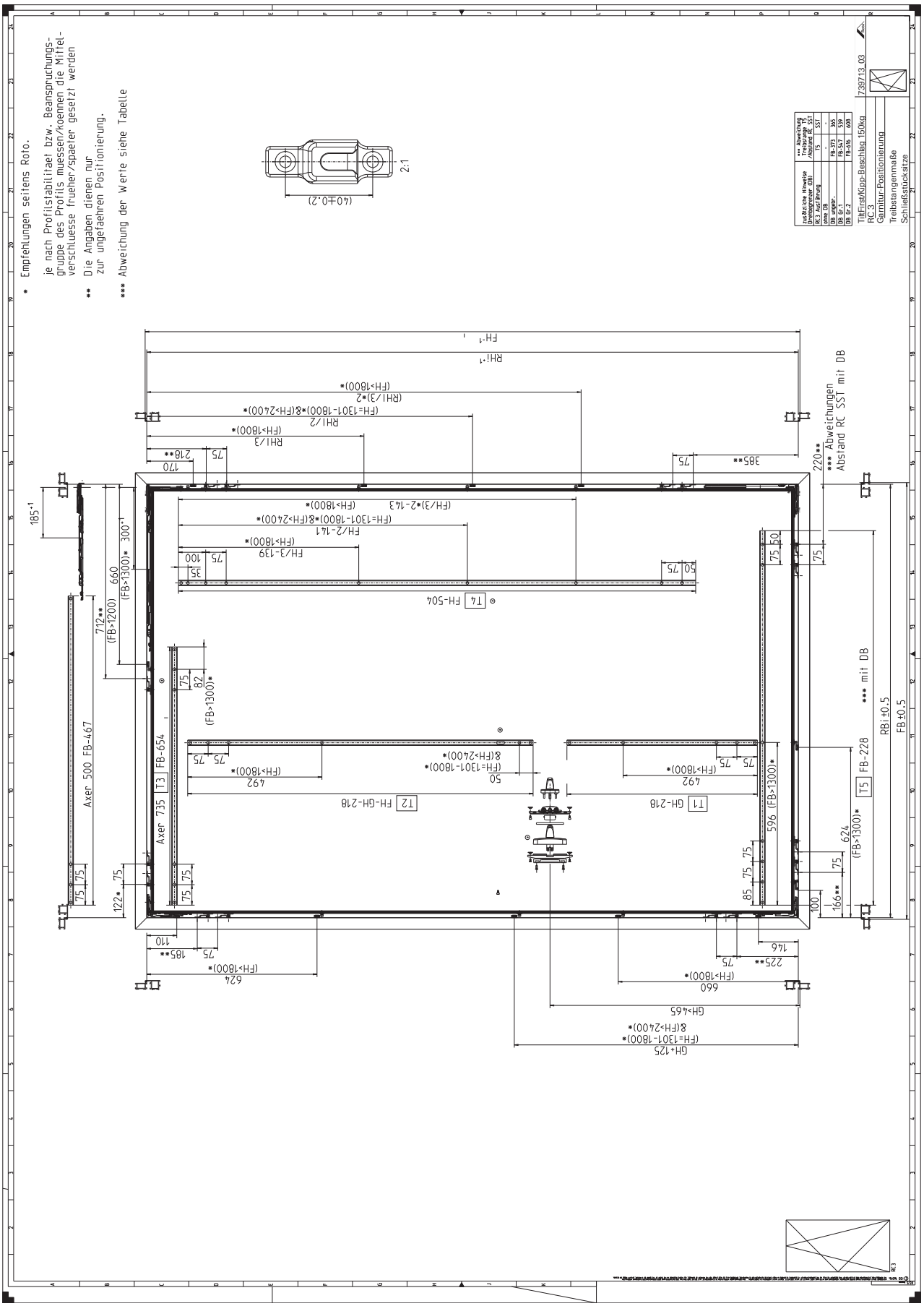

9.3.5 TF additional stay arms | 150 kg

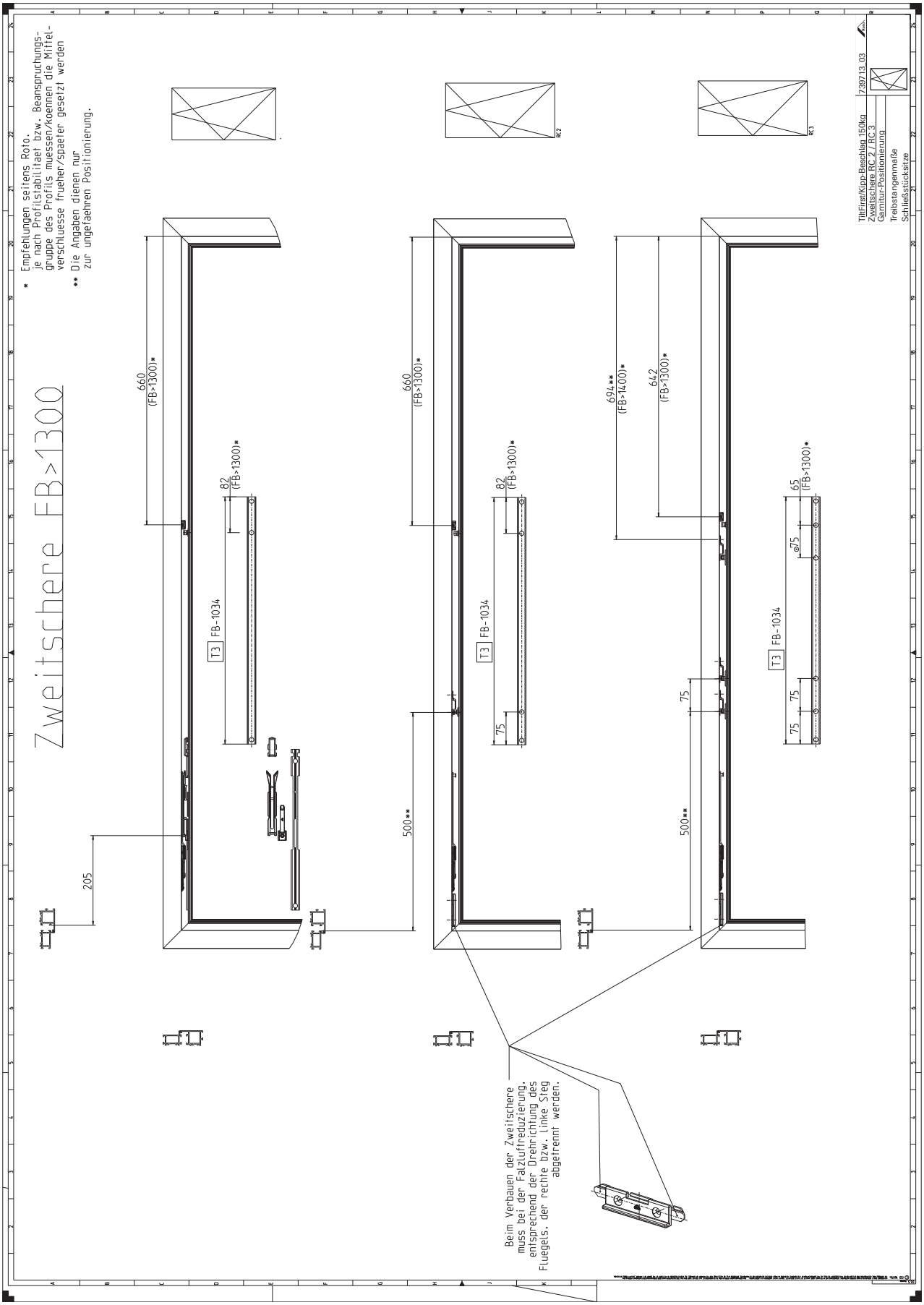

9.4 Turn-Only hardware

9.4.1 Explanation

The following markings are used in the installation drawings to emphasise references and other elements:

Marking	Translation
Abweichungen Abstand RC SST mit DB	Deviations from distance SEC striker with turn restrictor
Abweichung der Werte siehe Tabelle	Refer to the table for deviations in the values
Abweichung Treibstange T5/Abstand RC SST	Deviation from connecting rod CR5 / distance SEC striker
Aufsatzgetriebe	Geared-handle
Ausführung	Version
DB Gr. ...	Turn restrictor size ...
DB ungebr.	Turn restrictor, unbraked (with stop)
Die Angaben dienen nur zur ungefaehren Positionierung.	The information is for approximate positioning only.
Einlassgetriebe	Flush-encased gearbox
Empfehlungen seitens Roto: je nach Profilstabilitaet bzw. Beanspruchungsgruppe des Profils muessen / koennen die Mittel-verschluesse frueher / spaeter gesetzt werden.	Recommendations from Roto: depending on the profile stability or profile loading group, the centre locks must / can be put in place at an earlier / later point.
FB	Sash width
FB min.	Minimum sash width
FH	Sash height
Garnitur-Positionierung	Set positioning
generell bei allen Koppelstellen, wenn nichts anderes angegeben	Generally for all coupling points, unless otherwise specified
GH	Handle height
kg	Kilograms
mit DB	With turn restrictor
mit Flügelbreite	With sash width
ohne DB	Without turn restrictor
RBi	Frame width, internal
RC2	RC 2
RC3	RC 3
RHi	Frame height, internal
Schließstücksitze	Striker positions
SST	Striker
T	Connecting rod
Treibstangenmaße	Connecting rod dimensions
Treibstangenstanzung Getriebesperre	Connecting rod punched hole for espagnolette lock
zusätzliche Hinweise Drehbegrenzer (DB)	Additional information on the turn restrictor (TR)
X = frei positionierbar (Vorschlag: 60 mm)	X = freely positionable (suggestion: 60 mm)

9.4.2 T-O rebate sash stay, couplable | 80 kg

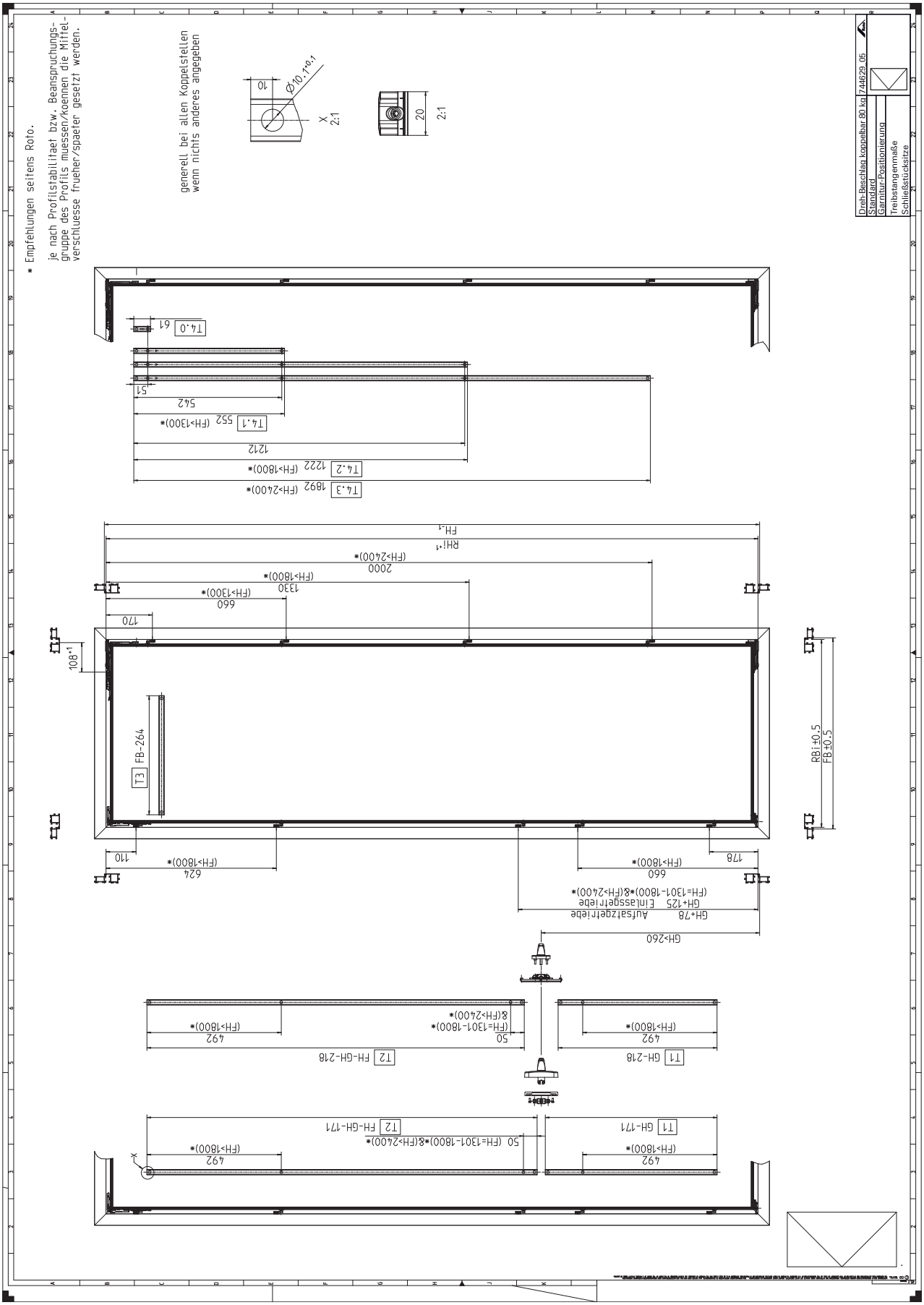

9.4.3 T-O rebate sash stay, couplable | RC 2 | 80 kg

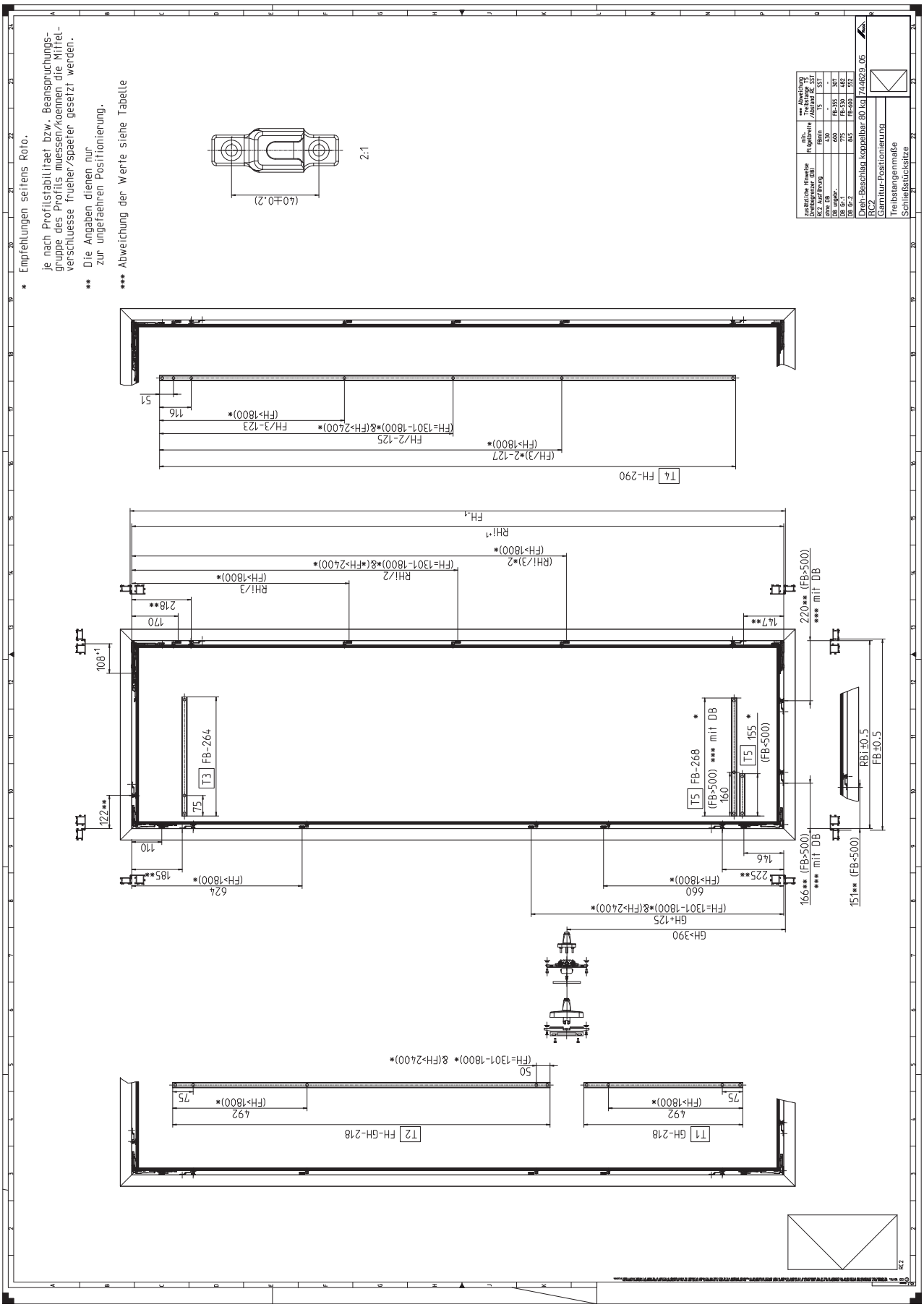

9.4.4 T-O rebate sash stay, couplable | RC 3 | 80 kg

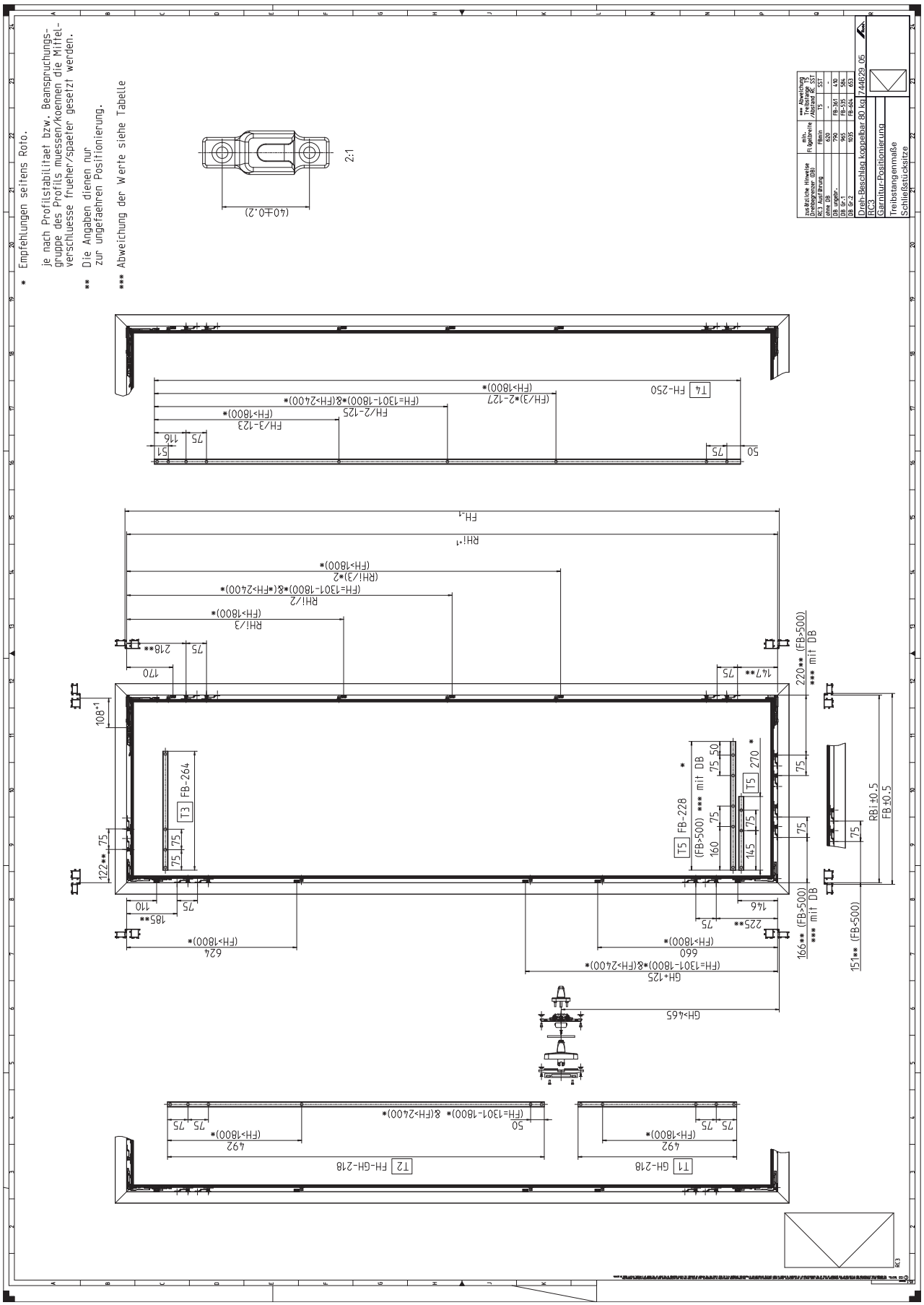

9.4.5 T-O | 150 kg

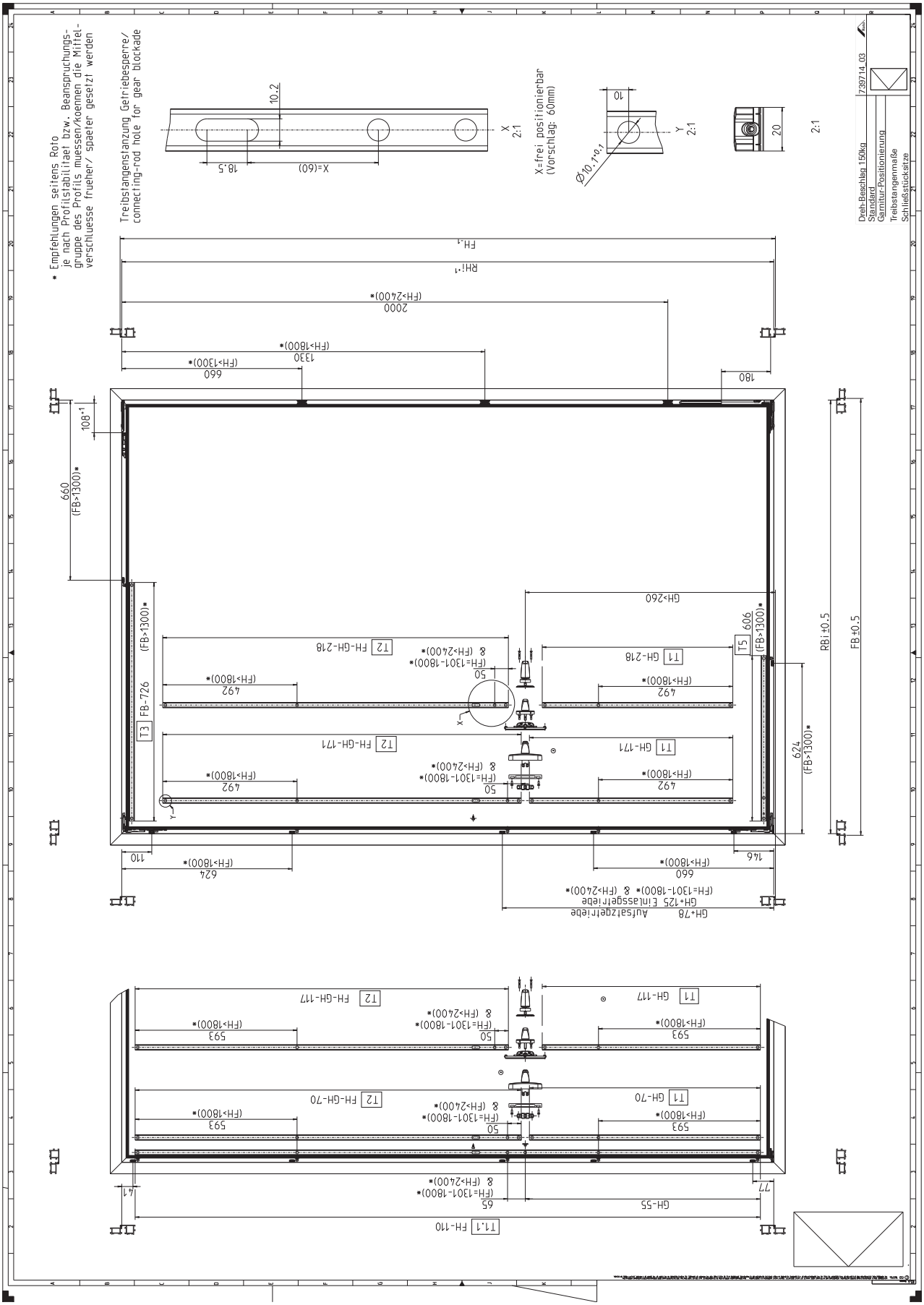
* Empfehlungen seitens Roto je nach Profilstabilitaet bzw. Beanspruchungs-gruppe des Profils muessen/koennen die Mittel-verschluesse frueher/ spaeter gesetzt werden
Treibstangenanzung Getriebesperre/ connecting-rod hole for gear blockade
X=(60)
18.5
10.2
X
2:1
X=frei positionierbar (Vorschlag: 60mm)
Ø10.1+0.1
10
Y
2:1
20
2:1
Dreh-Beschlag 150kg
Standard
Garnitur-Positionierung
Treibstangenmaße
Schließstücksitze
7.39714.03
FH-1
RH-1
2000
(FH>2400)*
1330
(FH>1800)*
660
(FH>1300)*
180
108-1
660
(FB>1300)*
FB-726
T3
(FB>1300)*
T5
606
(FB>1300)*
GH>260
RBi±0.5
FB±0.5
624
(FB>1300)*
T1
GH-218
T2
FH-GH-218
T1
GH-171
T2
FH-GH-171
492
(FH>1800)*
50
(FH=1301-1800)*
& (FH>2400)*
X
Y
110
624
(FH>1800)*
660
(FH>1800)*
146
GH+78
Aufsatzgetriebe
GH+125 Einlassgetriebe
(FH=1301-1800)* & (FH>2400)*
T1
GH-117
T2
FH-GH-117
T1
GH-70
T2
FH-GH-70
593
(FH>1800)*
50
(FH=1301-1800)*
& (FH>2400)*
T1.1
FH-110
GH-55
65
(FH=1301-1800)*
& (FH>2400)*
41
77

9.4.6 T-O | 150 kg | RC 2

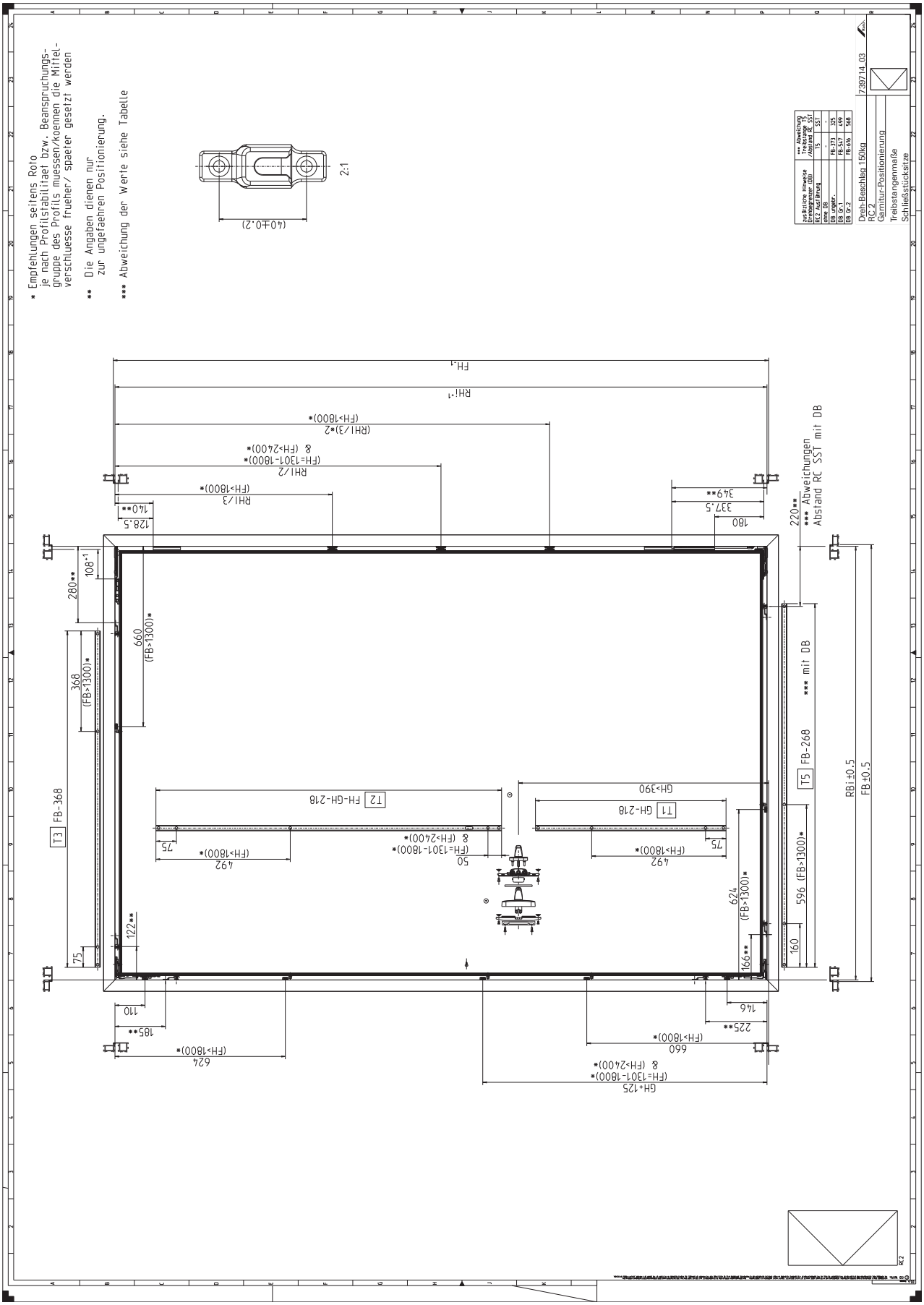

9.4.7 T-O | 150 kg | RC 3

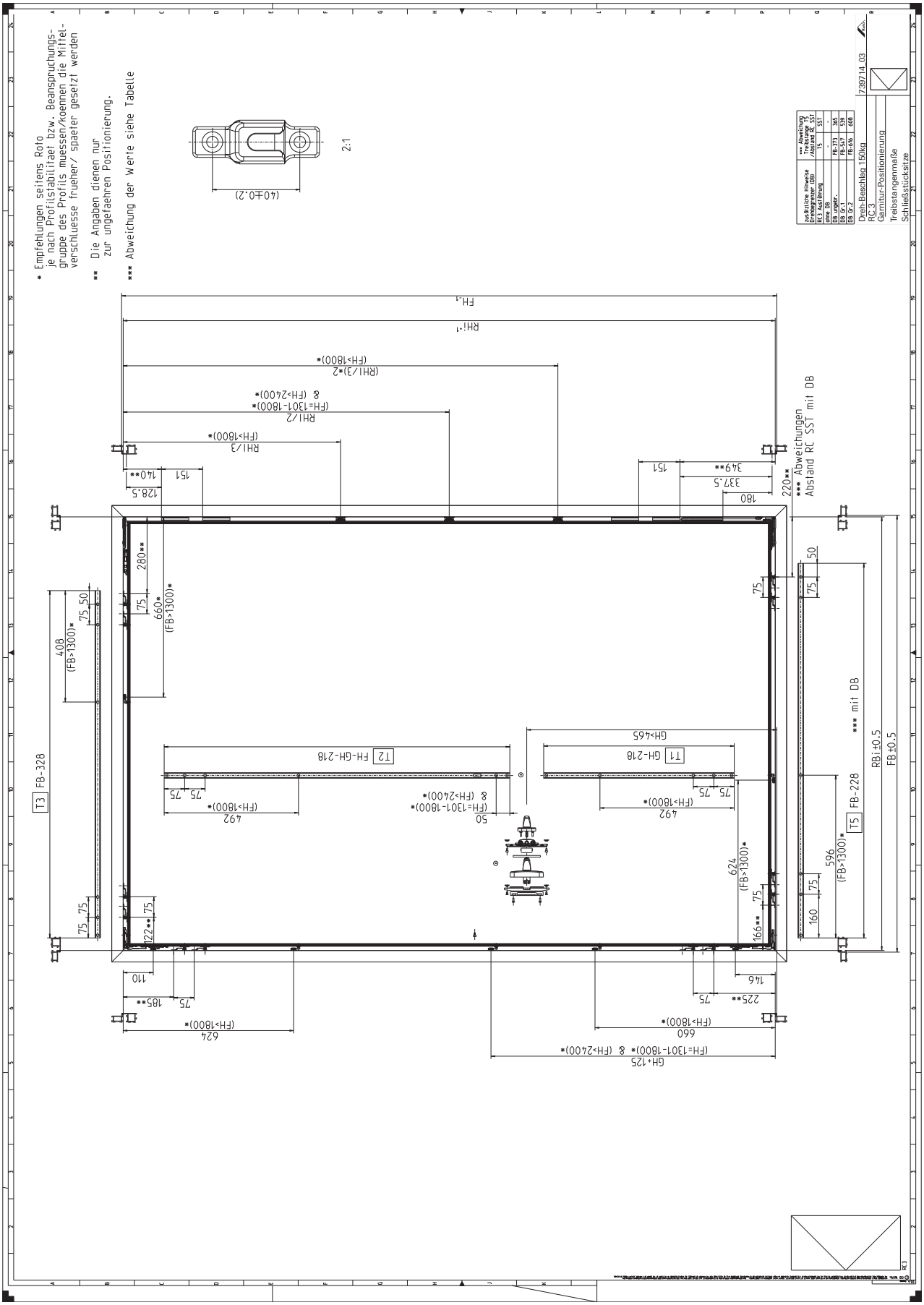

9.4.8 T-O | 180 kg

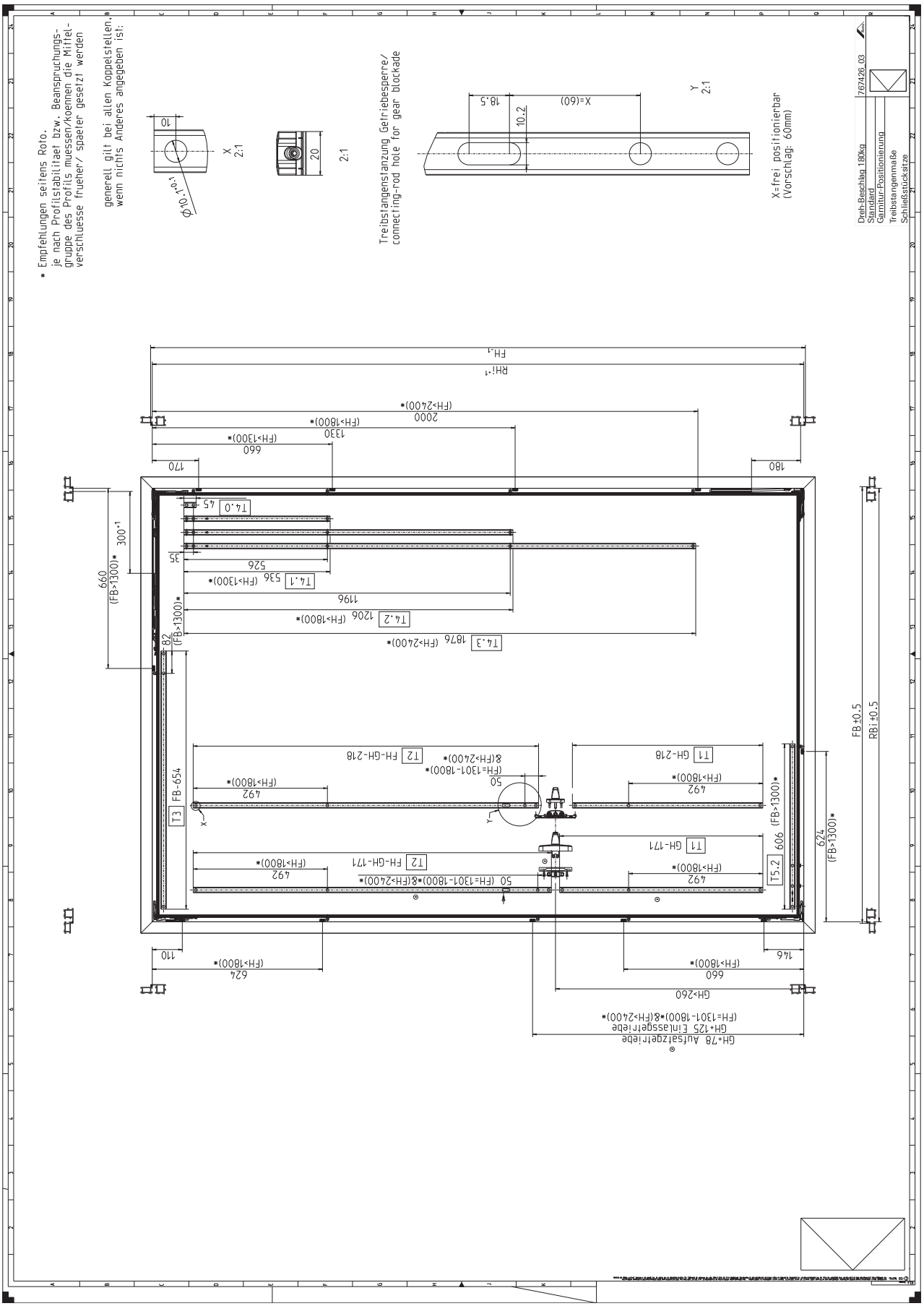
* Empfehlungen seitens Roto.
je nach Profilstabilitaet bzw. Beanspruchungs-
gruppe des Profils muessen/koennen die Mittel-
verschluesse frueher/ spaeter gesetzt werden
generell gilt bei allen Koppelstellen,
wenn nichts Anderes angegeben ist:
Treibstangenstanzung Getriebesperre/
connecting-rod hole for gear blockade
X=frei positionierbar
(Vorschlag: 60mm)
767426.03
Dreh-Beschlag 180kg
Standard
Garnitur-Positionierung
Treibstangenmaße
Schließstückstitze
FH-1
RH-1
(FH>2400)*
2000
(FH>1800)*
1330
(FH>1300)*
660
170
180
T4.0
45
300-1
660
(FB>1300)*
35
526
T4.1
536
(FH>1300)*
1196
T4.2
1206
(FH>1800)*
T4.3
1876
(FH>2400)*
82
(FB>1300)*
FB ±0.5
RBi ±0.5
T1
GH-218
T2
FH-GH-218
&(FH>2400)*
50
(FH=1301-1800)*
492
(FH>1800)*
T3
FB-654
T1
GH-171
T2
FH-GH-171
50 (FH=1301-1800)*&(FH>2400)*
T5.2
606
(FB>1300)*
624
(FB>1300)*
110
624
(FH>1800)*
146
660
(FH>1800)*
GH>260
GH+78 Aufsatzgetriebe
GH+125 Einlassgetriebe
(FH=1301-1800)*&(FH>2400)*

9.4.9 T-O | 180 kg | RC 2

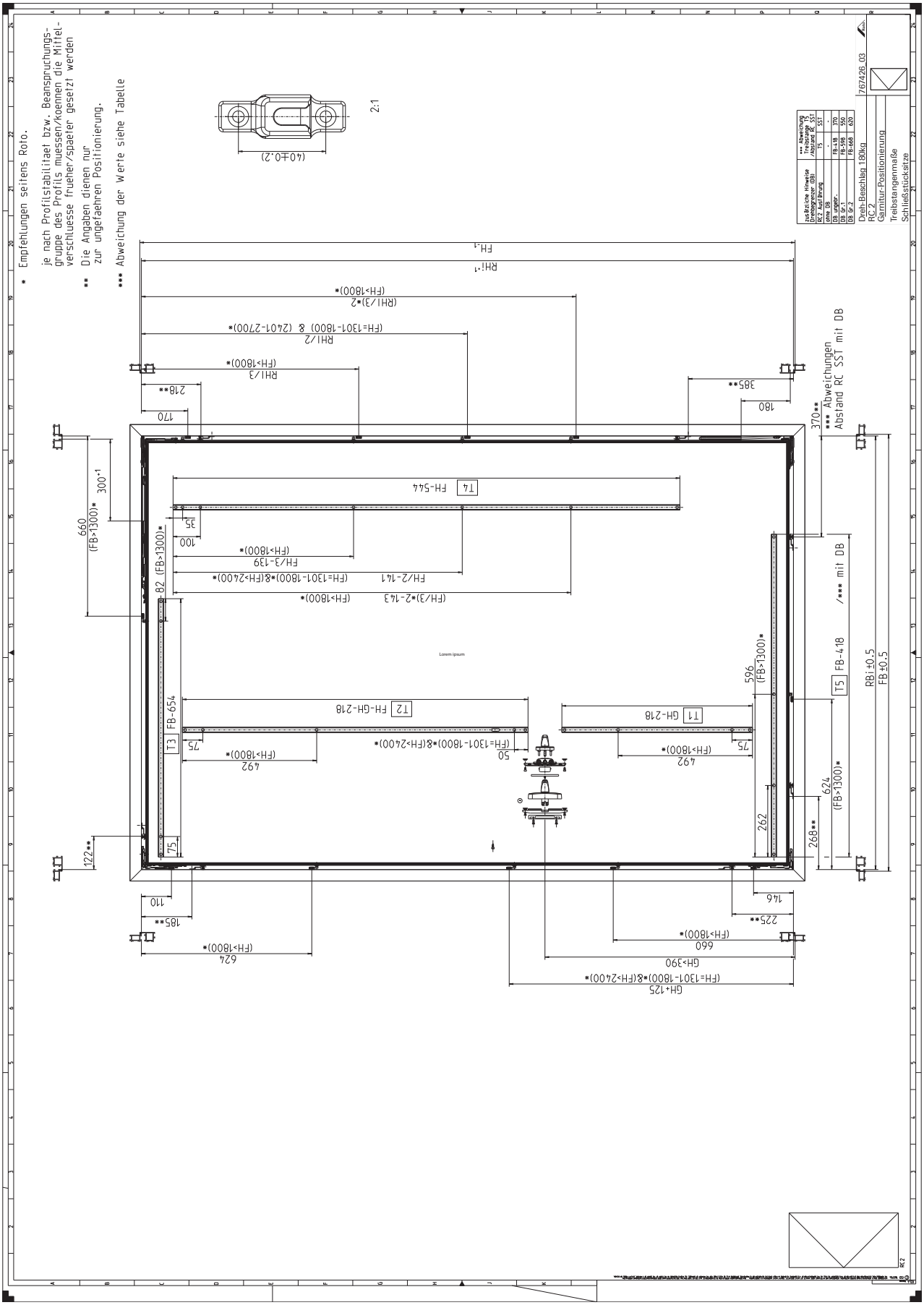

9.4.10 T-O | 180 kg | RC 3

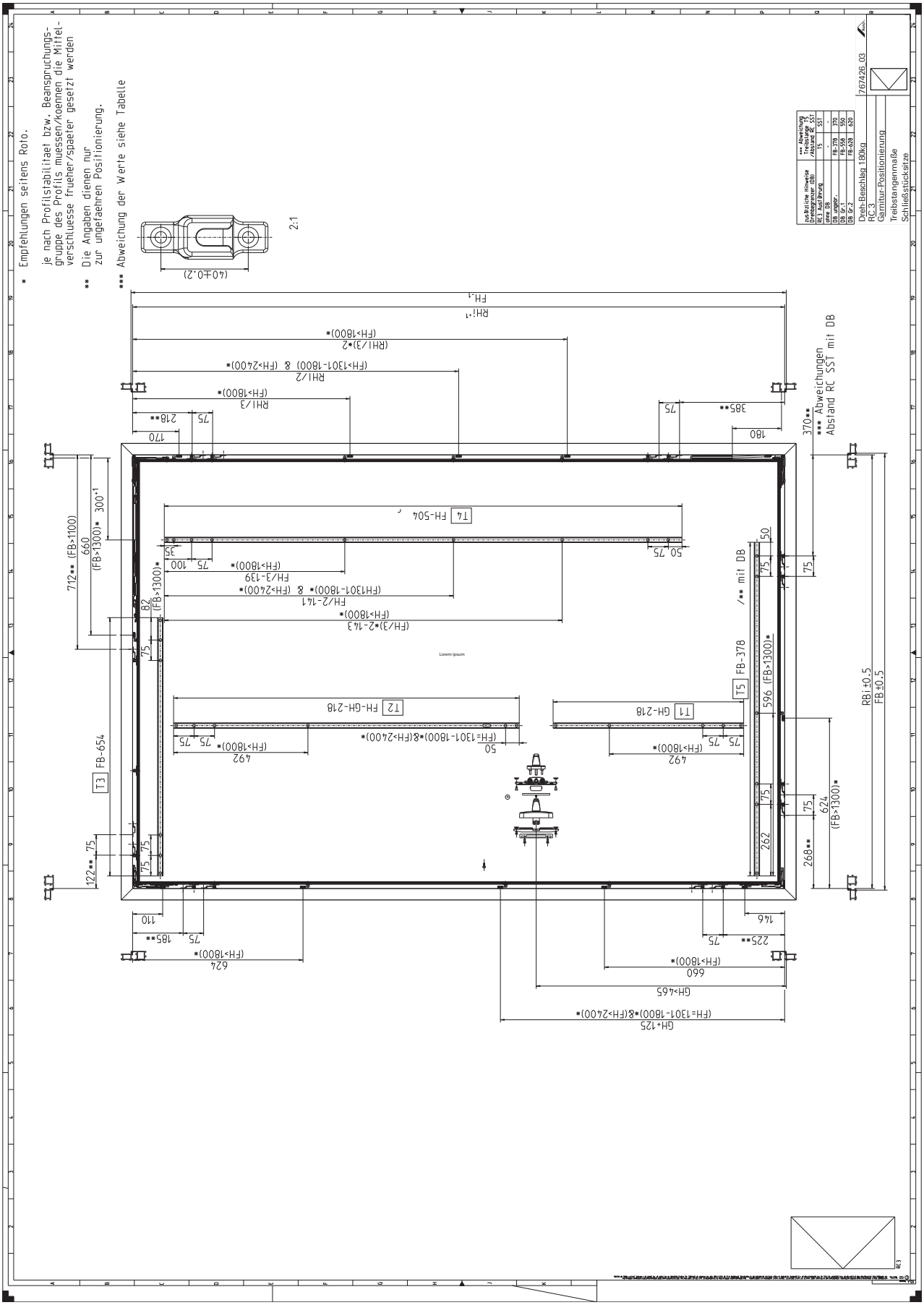

9.5 Tilt-Only hardware

9.5.1 Explanation

The following markings are used in the installation drawings to emphasise references and other elements:

Marking	Translation
Aufsatzgetriebe	Geared-handle
Axer	Sash stay
Beim Einsatz der Eckumlenkung mit Schaltsperre muss vor der Serienfertigung unbedingt ein Musteranschlag durchgefuehrt werden, um alle Maße und die Funktion zu prüfen.	When using the corner drive with mishandling device, sample installation is essential before series production starts to check all dimensions and correct functioning.
Die Angaben dienen nur zur ungefaehren Positionierung.	The information is for approximate positioning only.
DK Spaltlüfter ohne Zweitschere	Tilt&Turn night vent without additional stay arm
Einlassgetriebe	Flush-encased gearbox
Empfehlungen seitens Roto: je nach Profilstabilität bzw. Beanspruchungsgruppe des Profils müssen / können die Mittelverschlüsse in kürzeren / längeren Abständen gesetzt werden.	Recommendations from Roto: depending on the profile stability or profile loading group, the centre locks must / can be spaced closer together / further apart.
FB	Sash width
FH	Sash height
Garnitur-Positionierung	Set positioning
Generell bei allen Koppelstellen, wenn nichts anderes angegeben	Generally for all coupling points, unless otherwise specified
kg	Kilograms
Kipp-Beschlag/Griff oben	Tilt-Only hardware / handle at the top
Kippweite ... bis ... mm	Tilt distance ... to ... mm
Mitgeltende Unterlagen für die Montage beachten!	Comply with the other applicable documents for installation.
Position der Kippscheren	Position of the Tilt-Only stay arms
RBi	Frame width, internal
RC2	RC 2
RC3	RC 3
RHi	Frame height, internal
Schließstücksitze	Striker positions
T	Connecting rod
Treibstangenmaße	Connecting rod dimensions
Treibstangenstanzung Getriebesperre	Connecting rod punched hole for espagnolette lock
X = frei positionierbar (Vorschlag: 60 mm)	X = freely positionable (suggestion: 60 mm)

9.5.2 TiSt | 100 kg

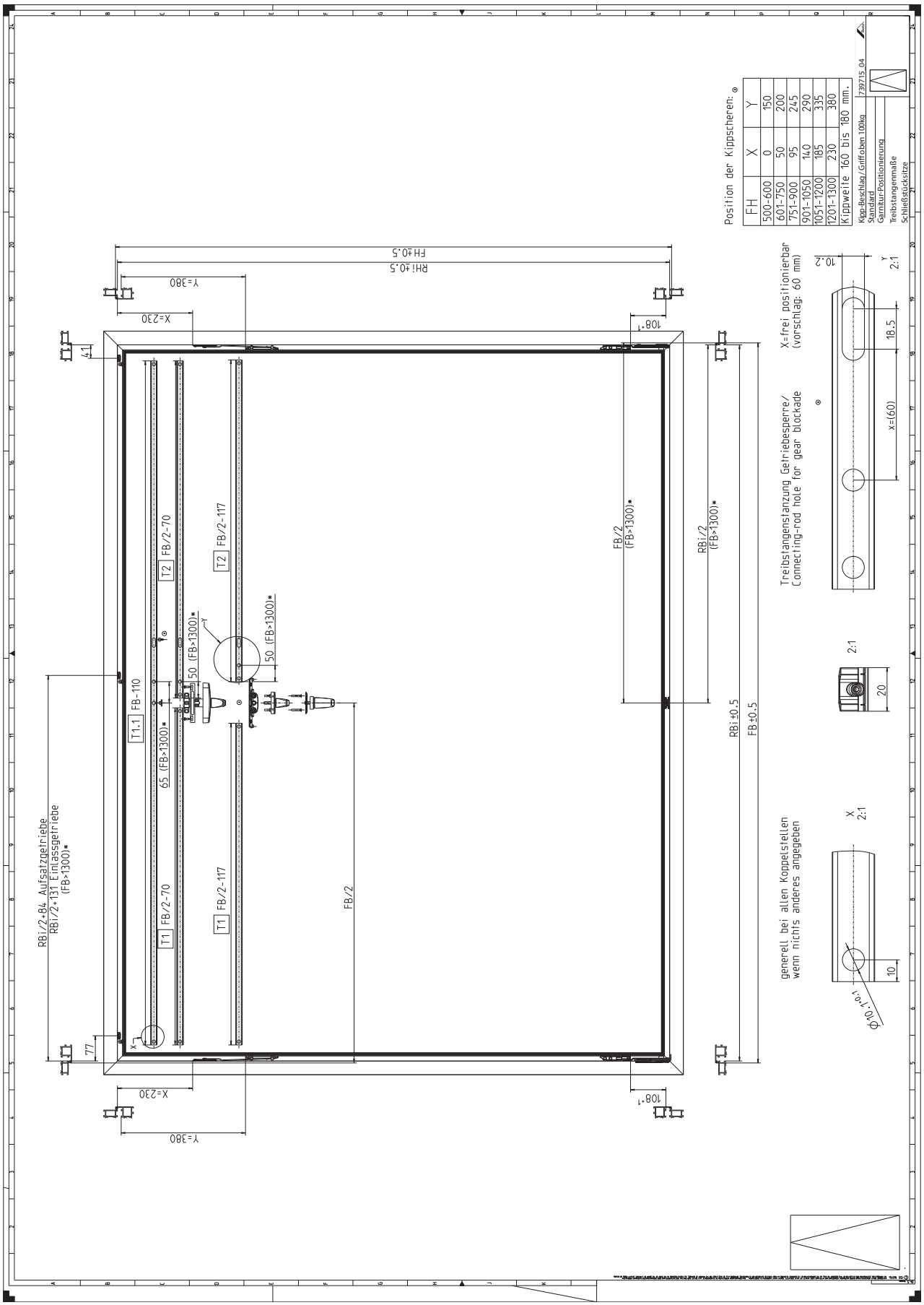

9.5.3 TiSt | 100 kg | RC 2

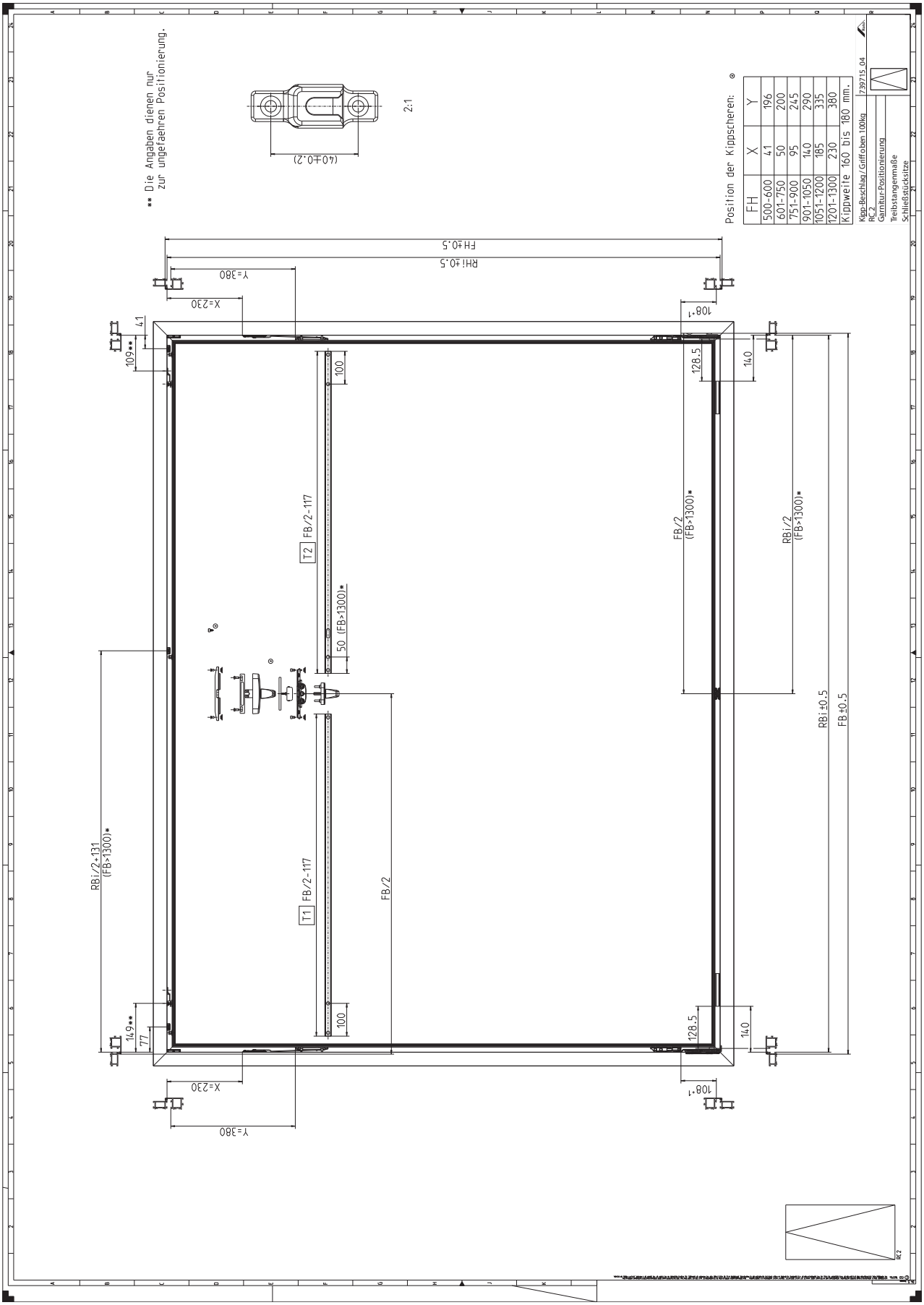

9.5.4 TiSt | 100 kg | RC 3

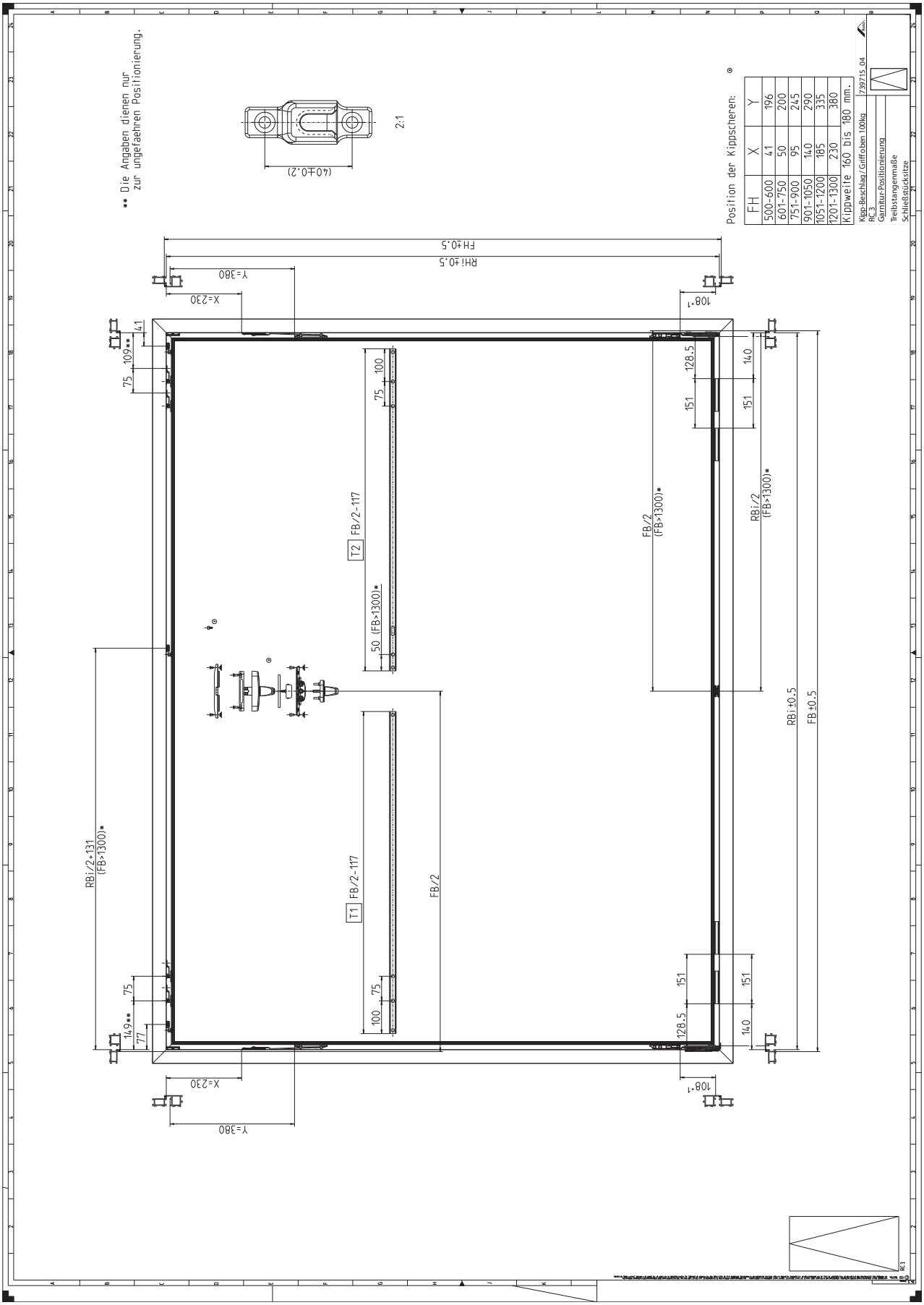

9.5.5 TiSt night vent

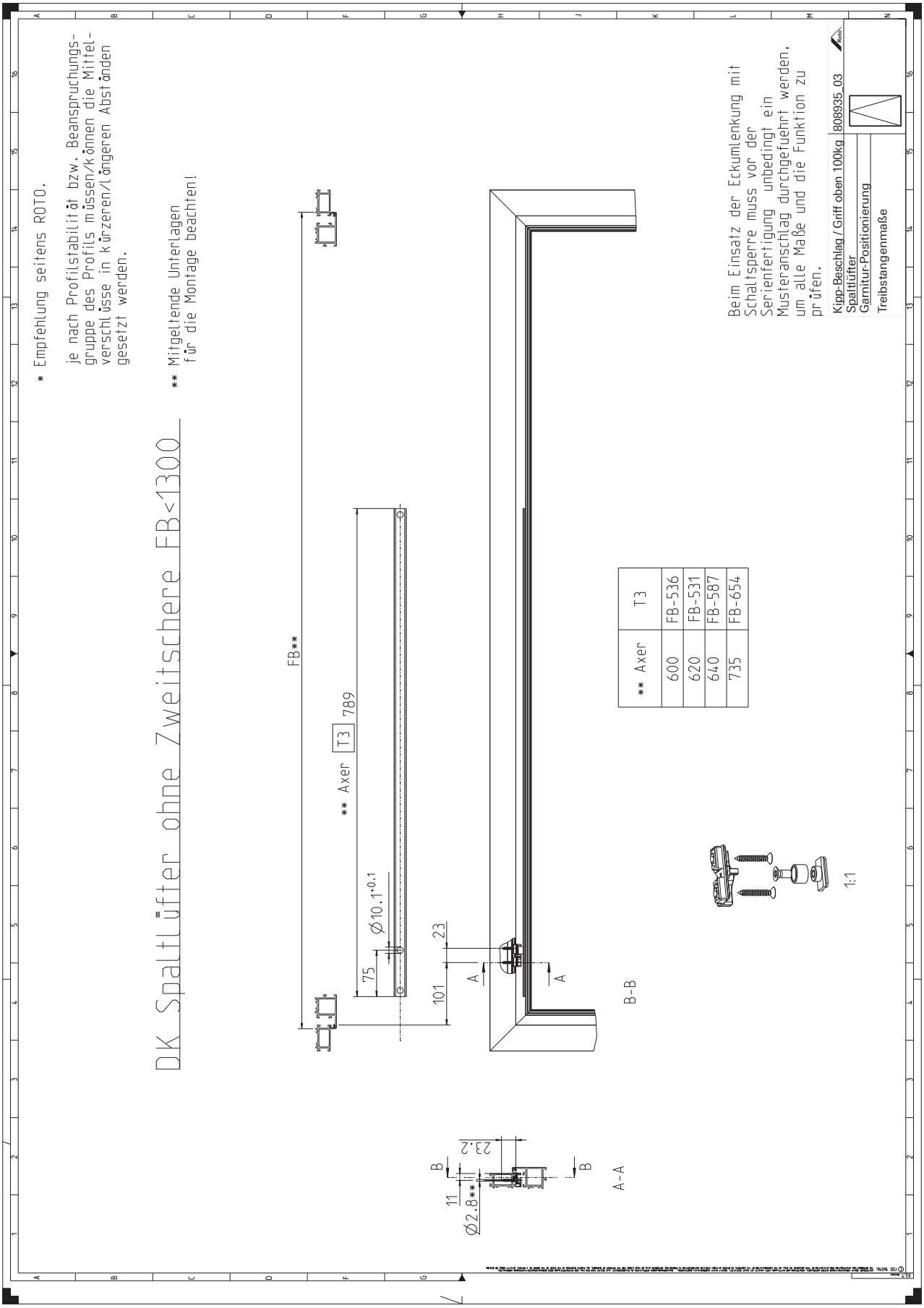

9.6 Floating-mullion hardware

9.6.1 Explanation

The following markings are used in the installation drawings to emphasise references and other elements:

Marking	Translation
Abweichungen Abstand RC SST mit DB	Deviations from distance SEC striker with turn restrictor
Abweichung der Werte siehe Tabelle	Refer to the table for deviations in the values
Abweichung Treibstange T5/Abstand RC SST	Deviation from connecting rod CR5 / distance SEC striker
AL und AL Desingo	Roto AL and Roto AL Designo
Aufsatzgetriebe	Geared-handle
Ausführung	Version
Axer	Sash stay
Darstellung Schließpunkt	Locking point diagram
DB Gr. ...	Turn restrictor size ...
DB ungebr.	Turn restrictor, unbraked (with stop)
DF	Turn-Only hardware
Die Angaben dienen nur zur ungefaehren Positionierung.	The information is for approximate positioning only.
Dreh-Beschlag	Turn-Only hardware
Dreh-Beschlag koppelbar	Turn-Only hardware, couplable
Dreh(Zweitöffnender Flügel) - Dreh-Kipp(Erstöffnender Flügel)	Turn-Only (second opening sash) – Tilt&Turn (first opening sash)
Einbaurichtung beachten. Pfeil zeigt zum Überschlag.	Note the installation direction. The arrow points to the overlap.
Einlassgetriebe	Flush-encased gearbox
Empfehlungen seitens Roto : je nach Profilstabilitaet bzw. Beanspruchungsgruppe des Profils muessen / koennen die Mittelverschluesse frueher / spaeter gesetzt werden.	Recommendations from Roto: depending on the profile stability or profile loading group, the centre locks must / can be put in place at an earlier / later point.
Ergänzende Unterlagen: Einbauzeichnung ST	Additional documents: floating-mullion espagnolette installation drawing
FB	Sash width
FH	Sash height
Garnitur-Positionierung	Set positioning
Generell bei Stulp Koppelstellen, wenn nichts anderes angegeben	Generally for floating mullion coupling points, unless otherwise specified
Gezeichnet in Drehstellung.	Drawn in the turn position.
GH	Handle height
Hinweis: Position und Orientierung der Schliessstücke beim Passivflügel abweichend zum Standard.	Note: the position and orientation of the strikers on the second opening sash differ from the standard position and orientation.
Hinweis: Schließstücke (für T1 und T2) auf Stulpprofil sind vom Flügelüberschlag bemaßt.	Note: strikers (for CR1 and CR2) on the floating-mullion profile are dimensioned from the sash overlap.
in verriegeltem Zustand arretieren	Stop when locked
kg	Kilograms
Laenge der Treibstangen nach Bedarf anpassen	Adapt the length of the connecting rods as required
min	Minimum
mit DB	With turn restrictor
Mitgeltende Unterlagen für die Montage beachten!	Comply with the other applicable documents for installation.
Öffnungsarten	Opening types
RBi	Frame width, internal
RC2	RC 2
RC3	RC 3
RHi	Frame height, internal
Schalthebel gefräst	Operating lever, routed
Schliessbewegung der Treibstange	Connecting rod closing movement
Schliesser	Cam
Schließstück	Striker
Schließstueck 660 mm ab FH>1800 mm unbedingt beachten.	Imperatively note striker 660 mm from SH >1800 mm.
Schließstücksitze	Striker positions
SH-Schliesser	Security cam
SH-Schließstück	Security striker
SH-Verriegelung	Security locking
SH-Verriegelung-Positionierung	Positioning of the security locking

Marking	Translation
SST	Striker
ST	Floating-mullion espagnolette, internal
Standard	Standard
ST-A	Floating-mullion espagnolette, surface-mounted
ST-AS	Floating-mullion espagnolette, surface-mounted, narrow version
ST-K	Floating-mullion shootbolt
ST-R	Floating-mullion espagnolette, slider
ST koppelbar	Floating-mullion hardware, couplable
ST und ST barrierefrei	Floating-mullion espagnolette, internal, not accessible / accessible
Stulpbauteile-Positionierung	Floating-mullion component positioning
Stulp-Beschlag	Floating-mullion hardware
Stulp DIN L	Floating-mullion hardware, DIN left
Stulpfluegelgetriebe	Floating-mullion espagnolette
T	Connecting rod
Treibstangenmaße	Connecting rod dimensions
zusätzliche Hinweise Drehbegrenzer (DB)	Additional information on the turn restrictor (TR)
Y-Wert ist in dem vorgegebenen Bereich (0<y<63) frei wählbar.	The Y-value can be freely selected in the specified range (0 < y < 63).

9.6.2 FM

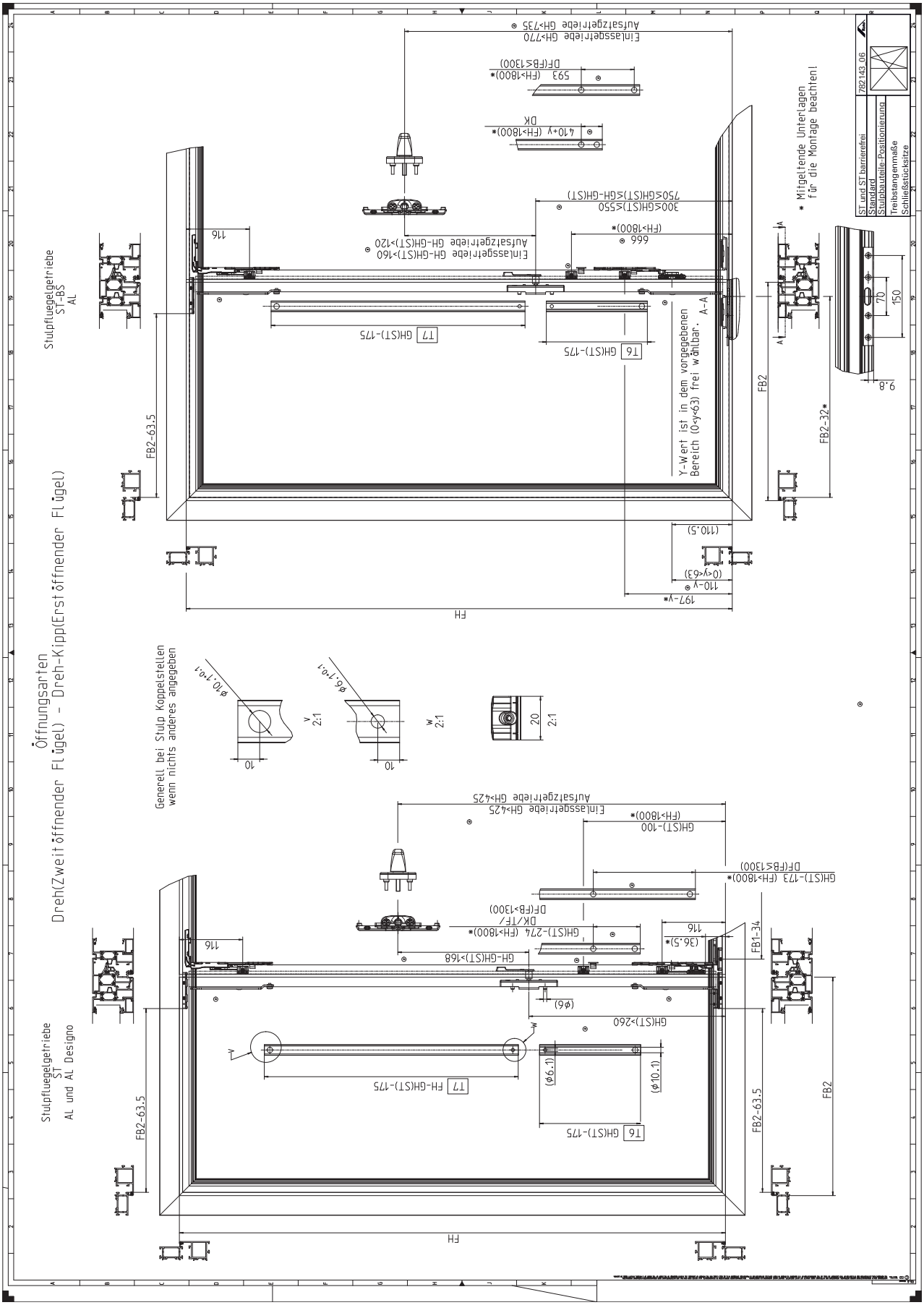
Öffnungsarten
Dreh(Zweitöffnender Flügel) - Dreh-Kipp(Erstöffnender Flügel)
Stulpfluegelgetriebe
ST-BS
AL
Stulpfluegelgetriebe
ST
AL und AL Designo
Generell bei Stulp Koppelstellen
wenn nichts anderes angegeben
Y-Wert ist in dem vorgegebenen
Bereich (0<y<63) frei wählbar.
* Mitgeltende Unterlagen
für die Montage beachten!
ST und ST barrierefrei
Standard
Stulpbauteile-Positionierung
Treibstangenmaße
Schließstückesitze
782143.06
FH
FB2
FB2-63.5
FB2-32*
FB1-34
Einlassgetriebe GH>770
Aufsatzgetriebe GH>735
Einlassgetriebe GH>425
Aufsatzgetriebe GH>425
Einlassgetriebe GH-GH(ST)>160
Aufsatzgetriebe GH-GH(ST)>120
300≤GH(ST)≤550
750≤GH(ST)≤GH-GH(ST)
GH(ST)-175
FH-GH(ST)-175
GH(ST)>260
GH-GH(ST)>168
GH(ST)-100
GH(ST)-173 (FH>1800)*
GH(ST)-274 (FH>1800)*
DF(FB≤1300)
DK/TF/
DF(FB>1300)
DK
197-y*
110-y
(0<y<63)
(110.5)
666
(FH>1800)*
410+y (FH>1800)*
593 (FH>1800)*
116
(36.5)*
(ø6)
(ø6.1)
(ø10.1)
ø10.1+0.1
ø6.1+0.1
10
20
2:1
9.8
70
150

9.6.3 FM-Su and FM-R

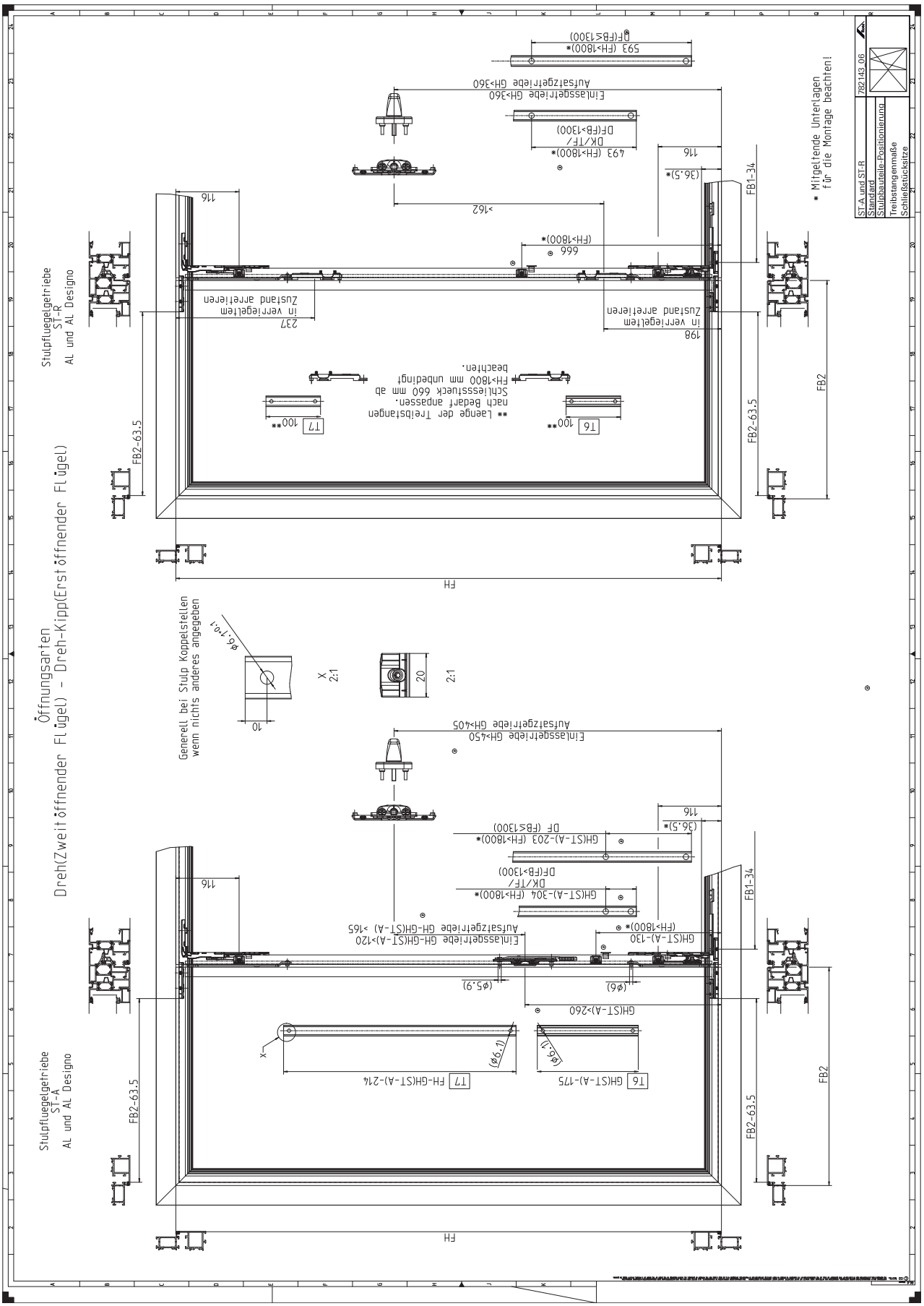

9.6.4 FM-SuN and FM-Sh

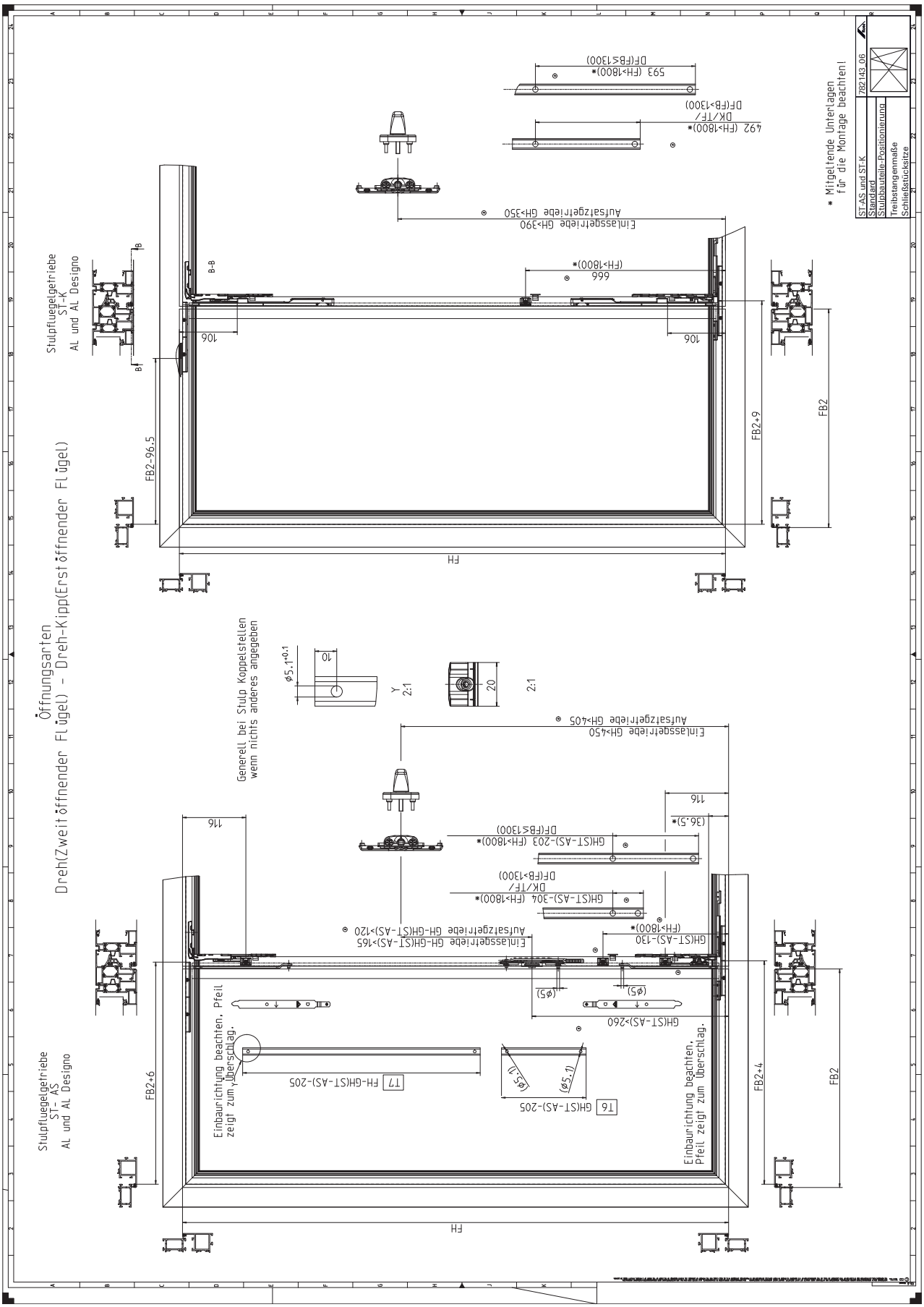

9.6.5 FM, couplable | SEC locking | RC 2 / RC 3

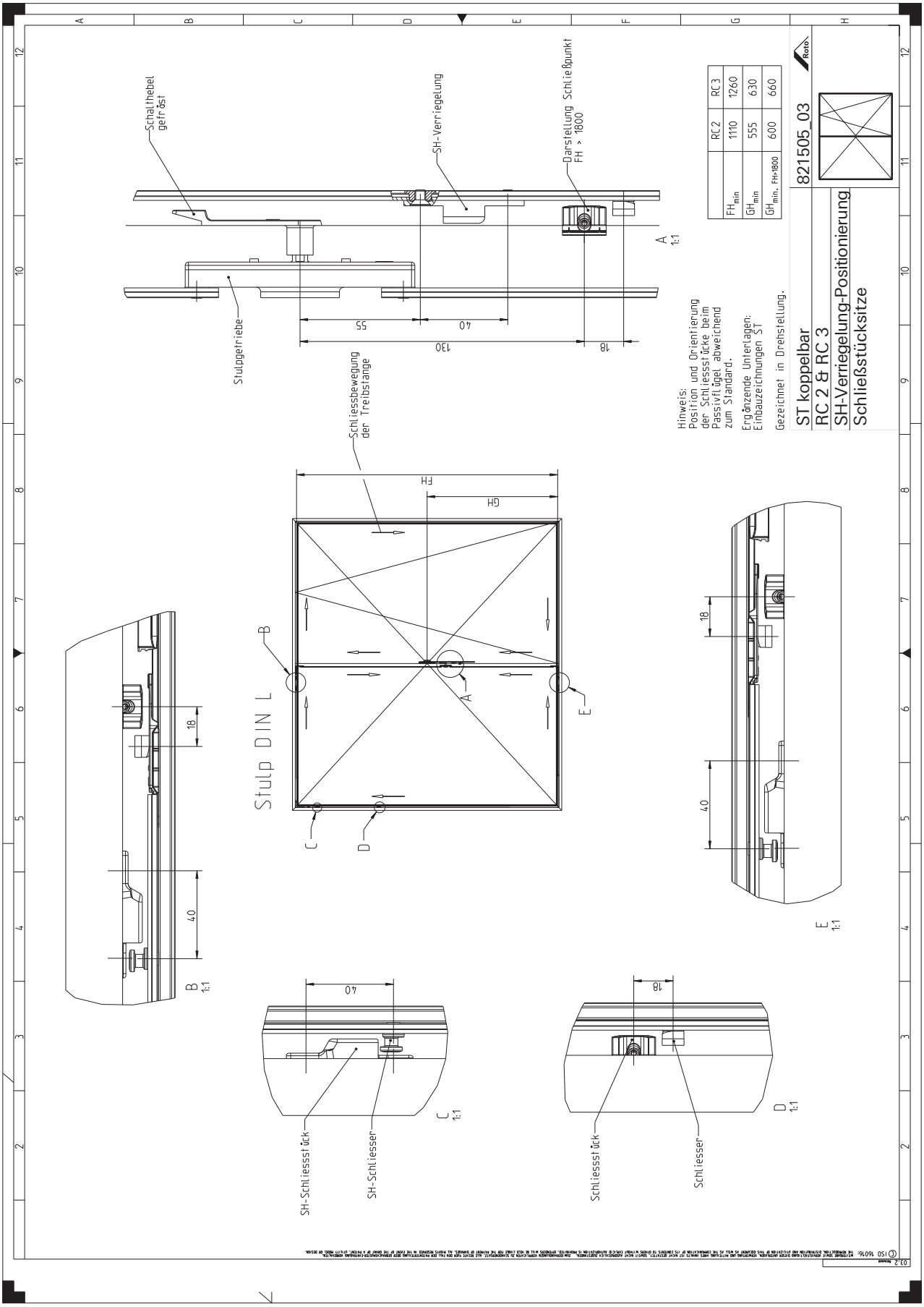

9.6.6 FM, couplable | 150 kg

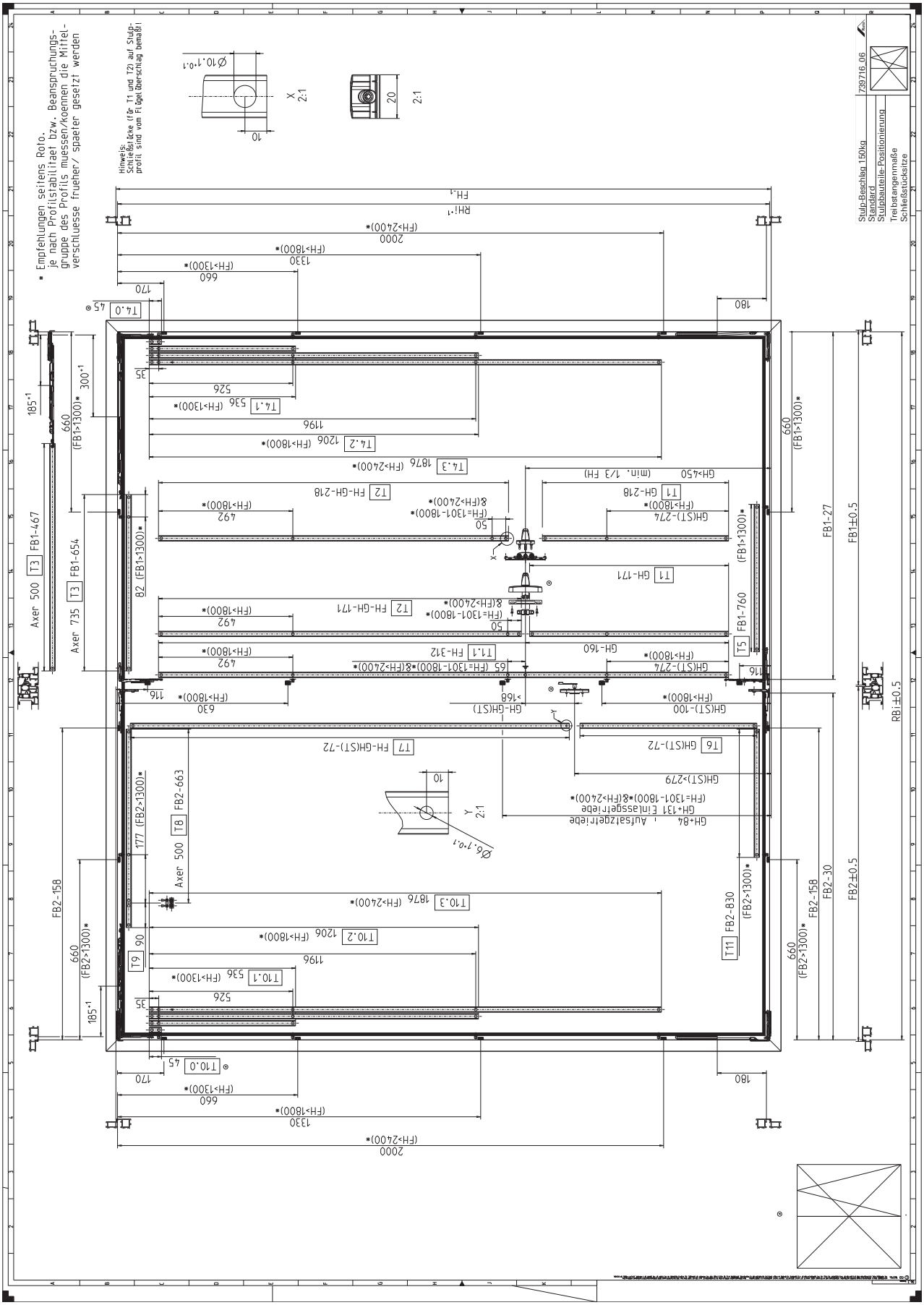

9.6.7 FM, couplable | 150 kg | RC 2

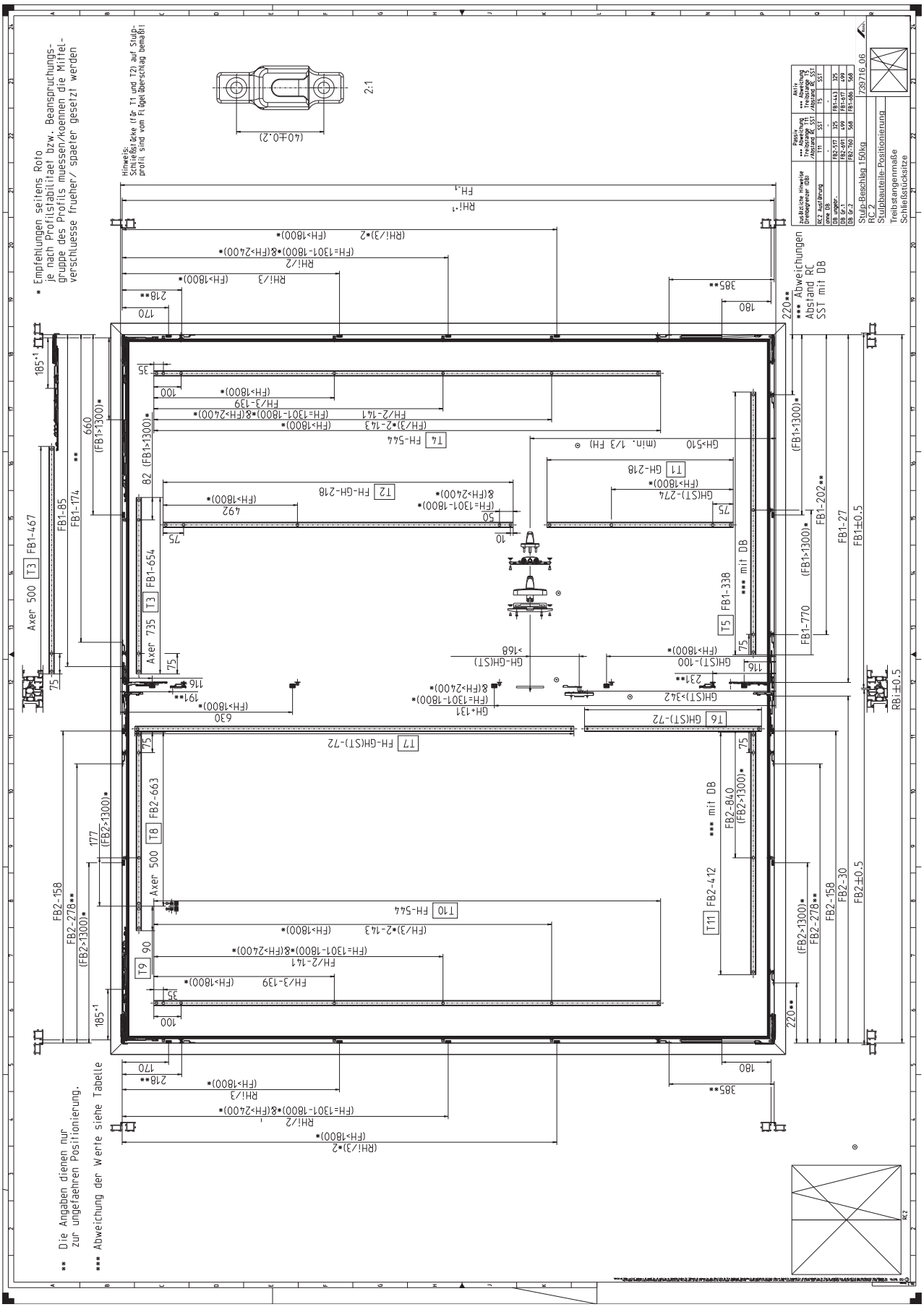

9.6.8 FM, couplable | 150 kg | RC 3

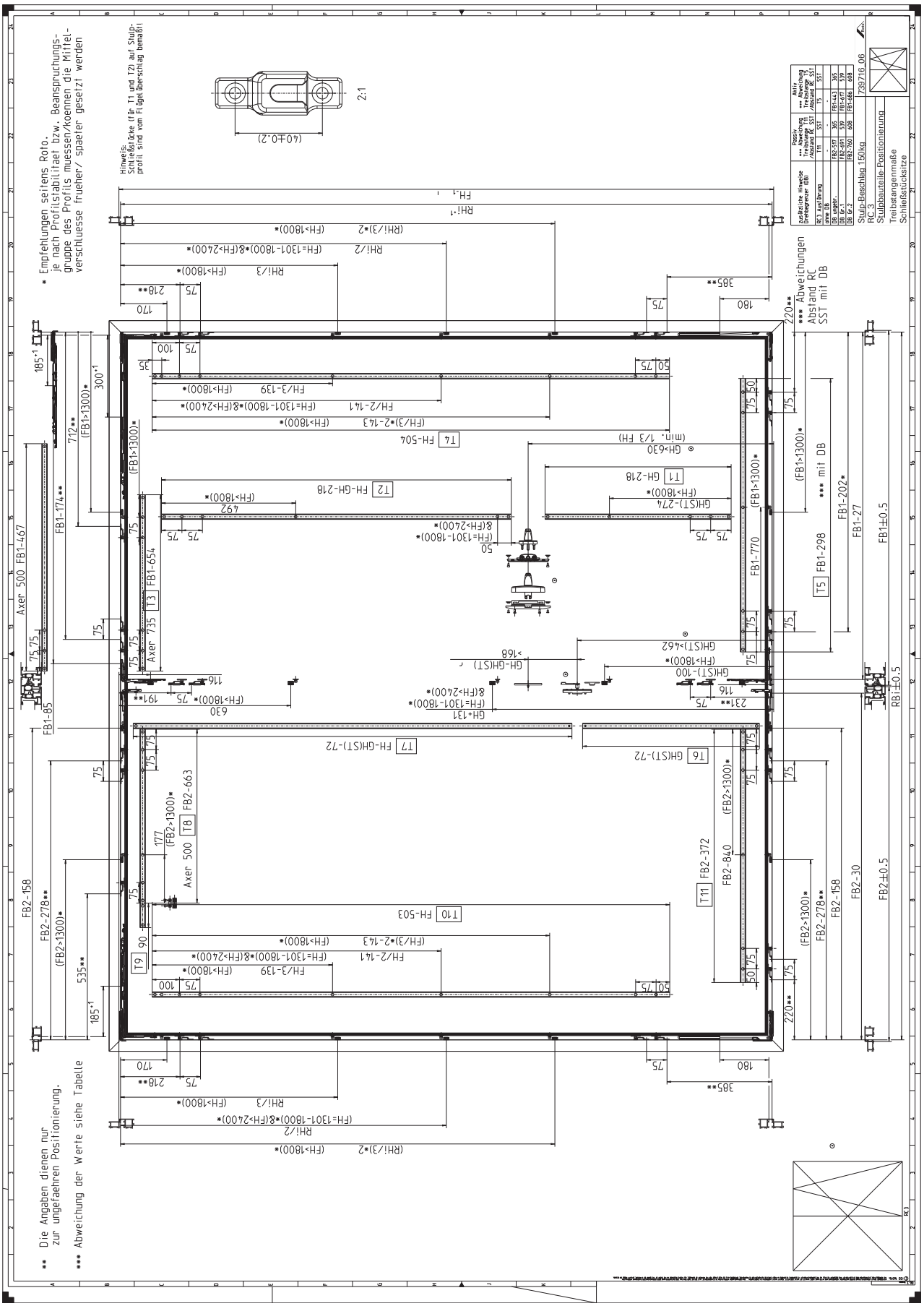

10 Adjustment

INFO
Roto hardware components may only be adjusted by authorised professionals when the element is installed.

10.1 Gasket compression adjustment

10.1.1 Cam, insertable

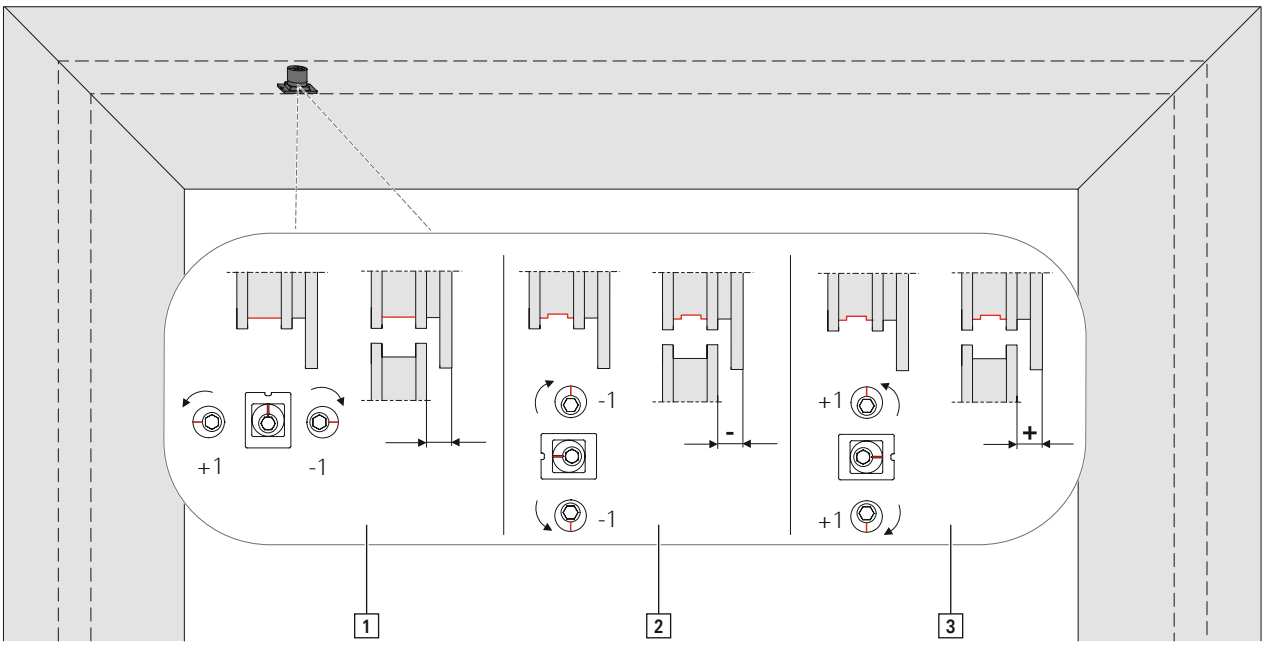

Adjusting the cam, insertable

1. Adjust the gasket compression at the cam.
   Tool: size 4 hex key

- [1] Increase / reduce the gasket compression.
- [2] Reduce the gasket compression.
- [3] Increase the gasket compression.

10.2 Tilt&Turn hardware

10.2.1 Lateral adjustment

10.2.1.1 Sash stay 390

Adjusting the sash stay

1. Open the window sash.

2. Lateral adjustment -1.5 mm.
   Tool: size 4 hex key

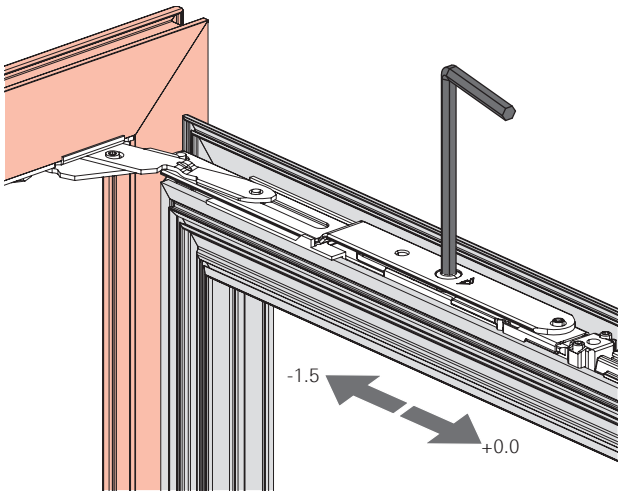

10.2.1.2 Sash stay 500, 735

Adjusting the scissor stay guide

1. Open the window sash.

2. Lateral adjustment ±2 mm.
   Tool: size 4 hex key

DANGER
Risk of death caused by incorrect adjustment!
Unscrewing the screw too far may lead to hazardous situations and cause serious or fatal accidents.
- Roto hardware components may only be adjusted by authorised professionals.
- The gap must be smaller than 6.3 mm.

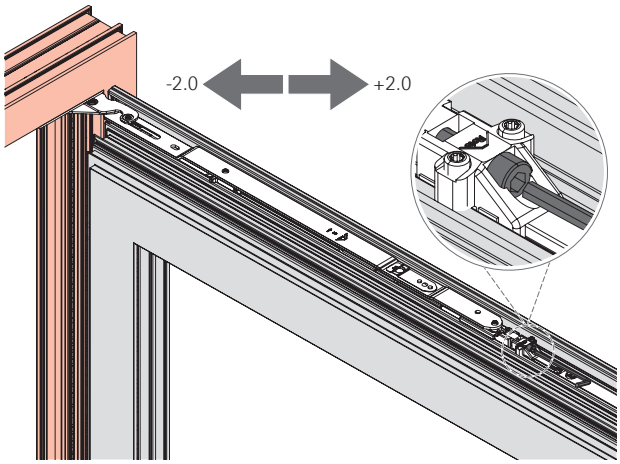

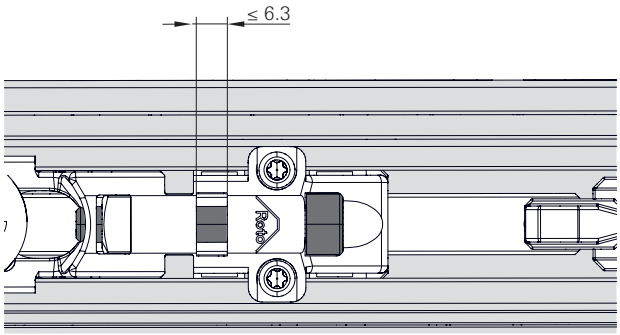

10.2.1.3 Corner hinge

Adjusting the corner hinge

1. Open the window sash.

2. Lateral adjustment -1 mm / +2 mm.
   Tool: size 4 hex key

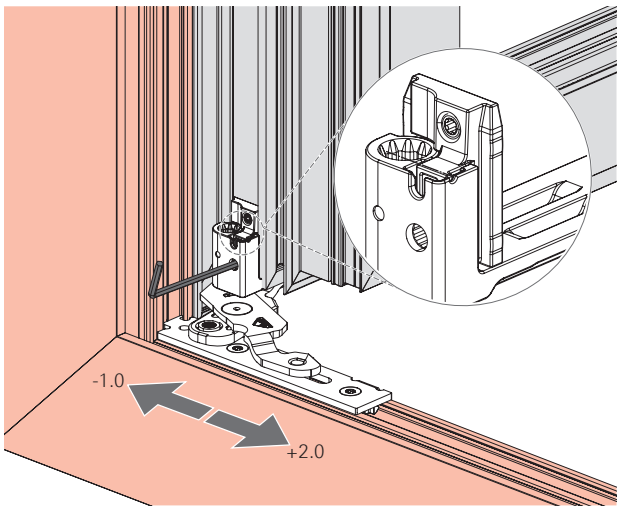

10.2.2 Height adjustment

10.2.2.1 Corner hinge

Adjusting the corner hinge

1. Open the window sash.

2. Height adjustment +2 mm / -0.5 mm via screw in the corner hinge.
   Tool: size 4 hex key

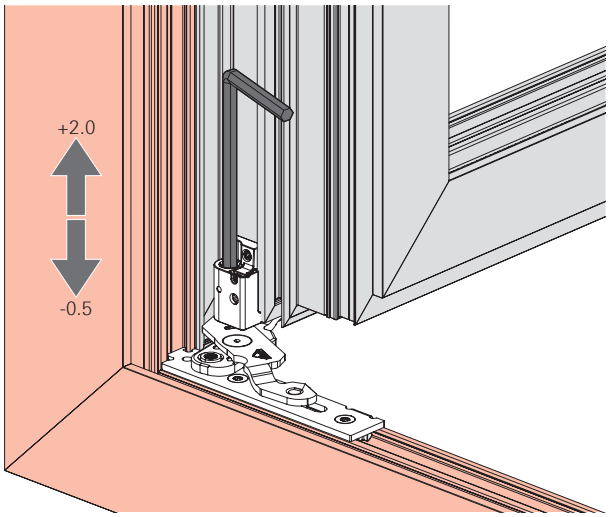

10.3 TiltFirst hardware

10.3.1 Lateral adjustment

10.3.1.1 Sash stay 500, 735

Adjusting the scissor stay guide

1. Open the window sash.

2. Lateral adjustment ±2 mm.
   Tool: size 4 hex key

DANGER
Risk of death caused by incorrect adjustment!
Unscrewing the screw too far may lead to hazardous situations and cause serious or fatal accidents.
- Roto hardware components may only be adjusted by authorised professionals.
- The gap must be smaller than 6.3 mm.

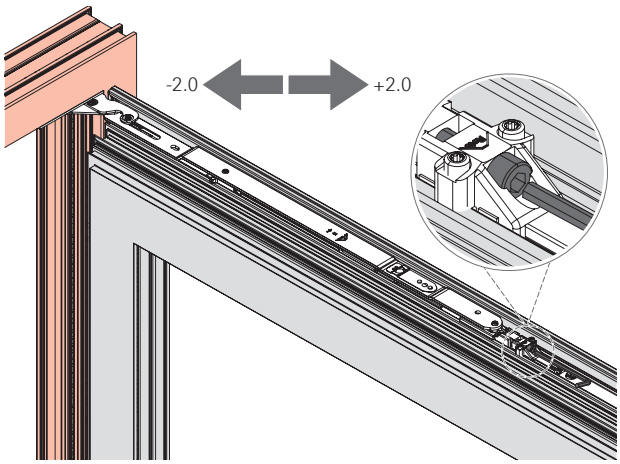

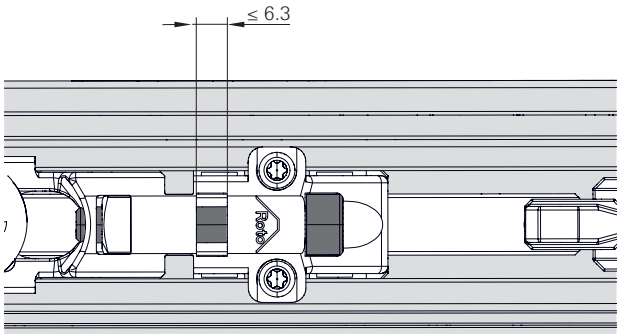

10.3.1.2 Corner hinge

Adjusting the corner hinge

1. Open the window sash.

2. Lateral adjustment -1 mm / +2 mm.
   Tool: size 4 hex key

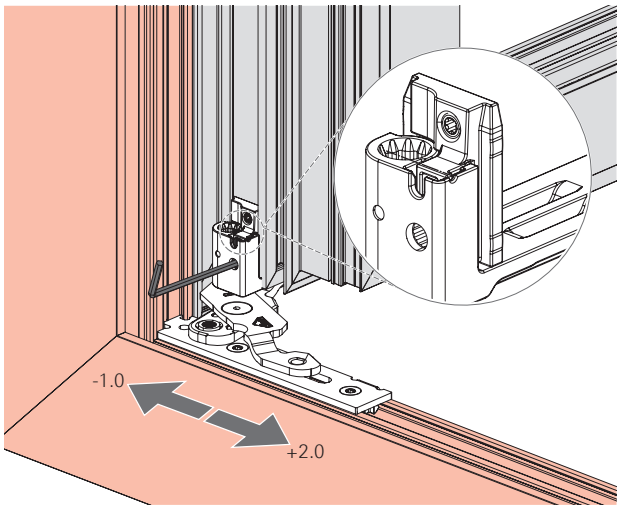

10.3.2 Height adjustment

10.3.2.1 Corner hinge

Adjusting the corner hinge

1. Open the window sash.

2. Height adjustment +2 mm / -0.5 mm via screw in the corner hinge.
   Tool: size 4 hex key

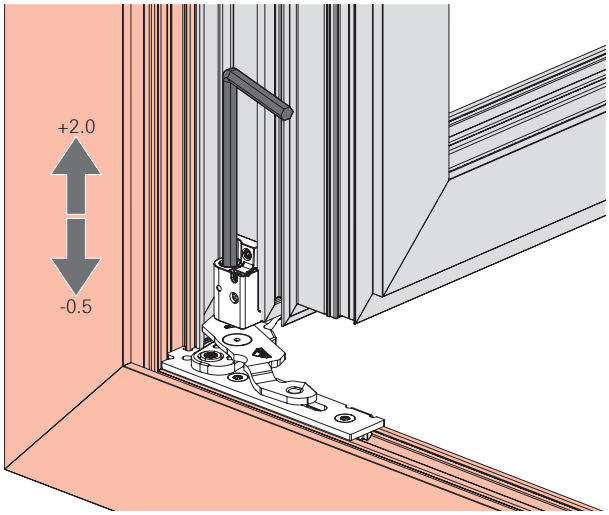

10.4 Turn-Only hardware

10.4.1 Lateral adjustment

10.4.1.1 Corner hinge

Adjusting the corner hinge

1. Open the window sash.

2. Lateral adjustment -1 mm / +2 mm.
   Tool: size 4 hex key

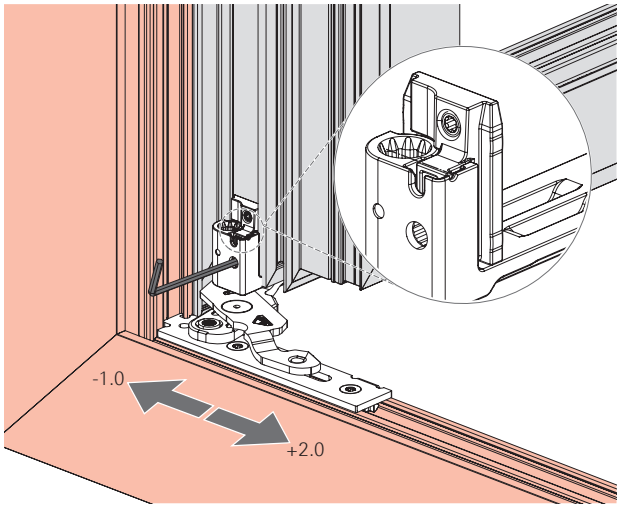

10.4.1.2 Rebate stay hinge, couplable, and rebate stay hinge

DANGER

Risk of death caused by incorrect adjustment!

Unscrewing the screw too far may lead to hazardous situations and cause serious or fatal accidents.

- Roto hardware components may only be adjusted by authorised professionals.
- Rebate stay hinge, couplable: gap ≤ 5.0 mm
- Rebate stay hinge: gap ≤ 7.0 mm

Rebate stay hinge, couplable

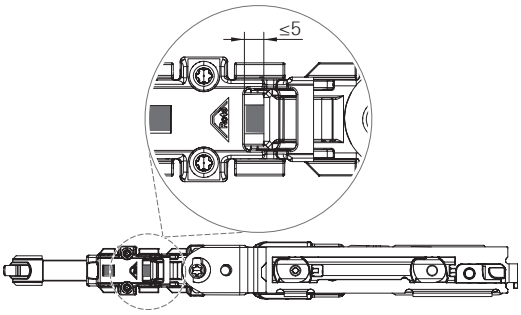

Rebate stay hinge

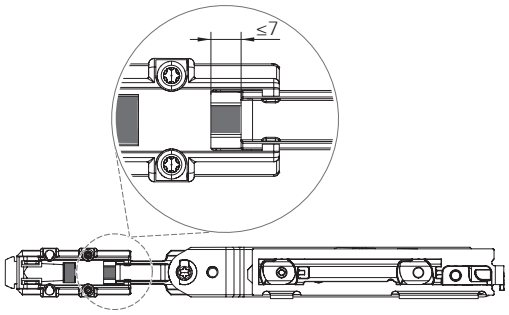

Adjusting the rebate stay hinge, couplable / rebate stay hinge

1. Open the window sash.

2. Lateral adjustment ±2 mm.
   Tool: size 4 hex key

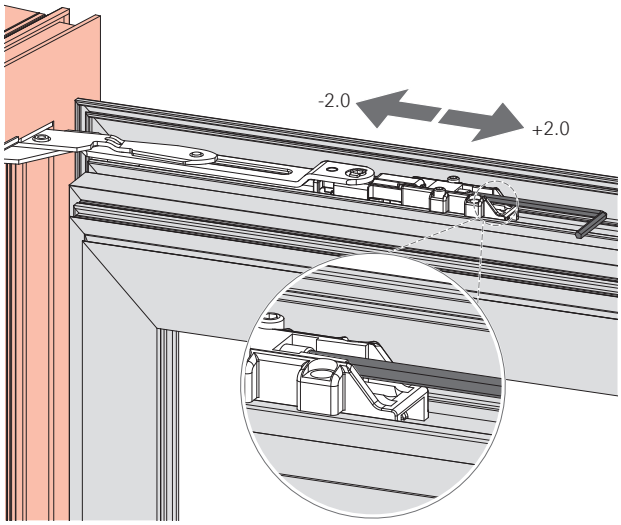

Fig. 10.1: Rebate stay hinge

10.4.1.3 Sash stay 735

Adjusting the scissor stay guide

1. Open the window sash.

2. Lateral adjustment ±2 mm.
   Tool: size 4 hex key

DANGER
Risk of death caused by incorrect adjustment!
Unscrewing the screw too far may lead to hazardous situations and cause serious or fatal accidents.
- Roto hardware components may only be adjusted by authorised professionals.
- The gap must be smaller than 6.3 mm.

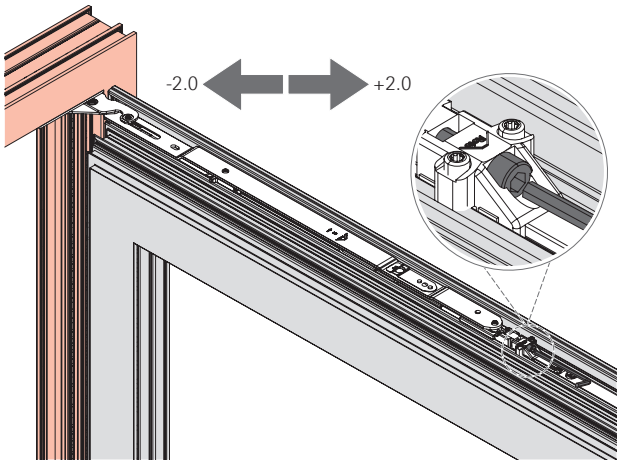

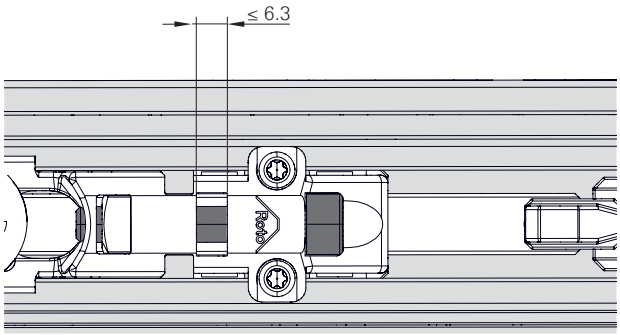

10.4.2 Height adjustment

10.4.2.1 Corner hinge

Adjusting the corner hinge

1. Open the window sash.

2. Height adjustment +2 mm / -0.5 mm via screw in the corner hinge.
   Tool: size 4 hex key

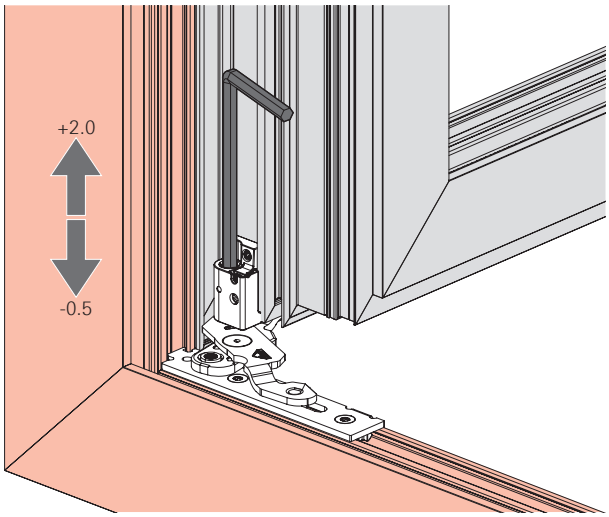

10.4.3 Gasket compression adjustment

10.4.3.1 Rebate stay hinge | 150 kg

Adjusting the rebate stay hinge

1. Move the window sash to the tilt position.

2. Gasket compression adjustment ±0.8 mm.
   Tool: size 4 hex key

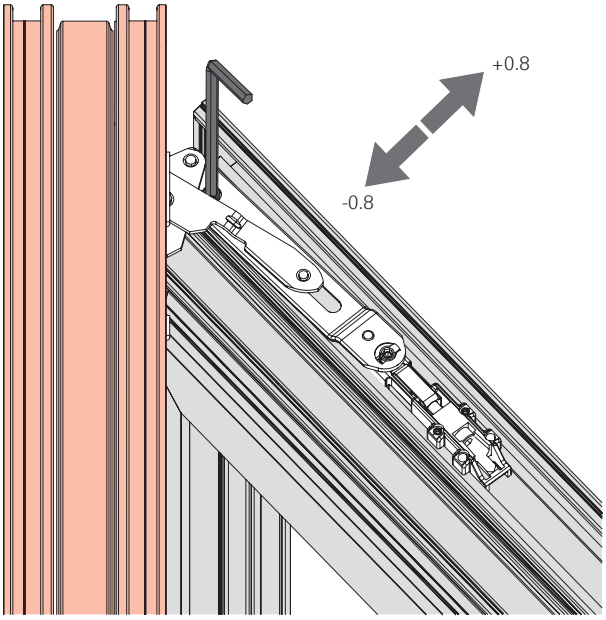

11 Operation

11.1 Operating information

The windows and balcony doors are operated using a handle.

The following symbols illustrate the different handle positions and the resultant sash positions of the windows and balcony doors.

11.1.1 Handle position with Tilt&Turn hardware

Handle position	Sash position	Meaning
		Sash in closed position.
		Sash in turned, open position.
	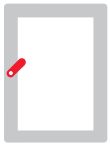	Sash in night ventilation position.
		Sash in tilted, open position.

11.1.2 Handle position with TiltFirst hardware

Handle position	Sash position	Meaning
		Sash in closed position.
	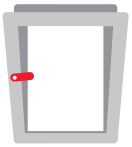	Sash in tilted, open position.
	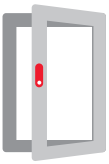	Sash in turned, open position.

11.1.3 Handle position with Turn-Only hardware

Handle position	Sash position	Meaning
		Sash in closed position.
		Sash in turned, open position.

11.1.4 Handle position with Tilt-Only hardware

Handle position	Sash position	Meaning
TiSt		
		Sash in closed position.
		Sash in tilted, open position.
TiSs		
		Sash in closed position.
		Sash in tilted, open position.

11.1.5 Incorrect position

Handle position	Sash position	Meaning
	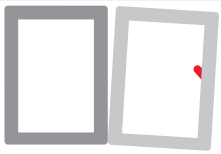	Sash in incorrect position.

11.2 Fault assistance

Fault	Cause	Corrective action	To be carried out by
Handle is difficult to turn.	Frame components have not been greased.	Grease the frame components.	☐
	Handle is damaged.	Replace the handle.	■
	Handle screwed into place too tightly.	Undo the screw fixing slightly.	■
	Sash components with slanting screws.	Screw the sash components in straight.	■
	Sash components are damaged.	Replace the sash components.	■
	Incorrect striker positions.	Adapt the striker positions.	■
	Sash stay gasket compression is too strong (accumulation of gaskets).	Adjust the sash stay gasket compression or clean the gasket.	■
Handle cannot be turned 180°.	Sash components hinged or installed incorrectly.	Check the setting in the turn position (potentially rehang – start from the T&T espagnolette).	■
	Connecting rod dimensions not OK.	Check the connecting rod dimensions.	■
Sash falls into the tilt position when in the turn position.	Excessive clearance at the top.	Check the fit of the corner hinge.	■
		Check the fit of the pivot rest.	■
		Adjust the corner hinge so that it is positioned higher (pay attention to the tilt striker).	■
Sash falls into the turn position when in the tilt position.	Tilt striker damaged.	Replace the tilt striker.	■
	Scissor stay inclusion not OK due to incorrect connecting rod dimensions.	Check the connecting rod dimensions.	■
Sash scrapes in the tilt position.	Insufficient clearance at the top.	Lower the corner hinge (pay attention to the tilt striker).	■
Locking cam is rubbing against the striker.	Sash mounted incorrectly.	Rehang the sash.	■
	Incorrect striker position.	Adapt the striker position.	■

☐ = May be carried out by a specialist company or the end user

■ = **Must** be carried out by a specialist company

12 Maintenance

CAUTION

Performing maintenance work incorrectly can lead to injuries.

Performing maintenance incorrectly can lead to injuries.

- Ensure that there is sufficient space for installation before starting work.
- Ensure that the installation site is clean and tidy.
- Always have hardware adjustment and replacement work performed by a specialist company.
- Secure the sash against unintentionally opening or closing.
- Do not unhinge the sash for maintenance.

ATTENTION

Incorrect or improper testing may cause property damage.

Incorrect or improper testing of the hardware may cause the element to malfunction.

- Have the hardware checked by a specialist company when installed.
- If defects need to be remedied, have the element unhinged and remounted by a specialist company.

INFO

The manufacturer must draw the attention of builders and end consumers to these maintenance instructions.

Roto Frank Fenster- und Türtechnologie GmbH recommends the manufacturer conclude a maintenance agreement with their end users.

No legal claims can be derived from the following recommendations; their application is to be based on the specific individual case.

	Responsibility	
Maintenance interval	□	→ *from page 329*
Cleaning		→ *from page 330*
Clean hardware	□	
Care		→ *from page 330*
Lubricate movable parts	□	
Lubricate locking points	□	
Performance test		→ *from page 332*
Check that hardware components are fitted securely	□	
Inspect hardware components for wear	□	
Check that movable parts work properly	□	
Check that locking points work properly	□	
Check ease of movement	■	
Repair		→ *from page 332*
Retighten screws	■	
Replace damaged components	■	

□ = May be carried out by a specialist company or the end user

■ = **Must** be carried out by a specialist company

12.1 Maintenance intervals

ATTENTION

Failure to adhere to maintenance intervals may cause property damage.

The maintenance interval for all tasks relating to the hardware components is **annually** at the least. In hospitals, schools and hotels, the maintenance interval is **six-monthly**.

Regular maintenance is necessary in order to maintain the proper and smooth-running operation of the hardware and to prevent premature wear or even defects.

- Determine and adhere to the appropriate maintenance interval in accordance with the ambient conditions.

12.2 Cleaning

ATTENTION

Using incorrect cleaning agents and sealing compounds may cause property damage.

Cleaning agents and sealing compounds may damage the surfaces of components and gaskets.

- Do not use aggressive or flammable liquids, acidic cleaners or abrasive cleaners.
- Only use mild, pH-neutral cleaning agents that have been diluted.
- Apply a thin protective film to the components, for example using a cloth soaked in oil.
- Avoid aggressive vapours (e.g. produced by formic acid, acetic acid, ammonia, amine compounds, ammonia compounds, aldehyde, carbolic acid, chlorine, tannic acid) around the element.
- Do not use any acetic acid-crosslinking or acid-crosslinking sealing compounds or those with the aforementioned constituents as both direct contact with the sealing compound and its fumes can corrode the surface of the components.

Cleaning the hardware

- Clean deposits and contaminants off the hardware using a soft cloth.
- Lubricate movable parts and locking points after cleaning. → *12.3 "Care" from page 330*
- Apply a thin protective film to the hardware, for example using a cloth soaked in oil.

12.3 Care

ATTENTION

Using incorrect lubricants may cause property damage.

Substandard lubricants can prevent the hardware from working properly.

- Use high-quality lubricants.
- Only use resin-free and acid-free lubricants.

ATTENTION

Cleaning agents and lubricants may pollute the environment.

Leaking or excess cleaning agents and lubricants may pollute the environment.

- Remove any leaking or excess cleaning agents and lubricants.
- Dispose of cleaning agents and lubricants separately and properly.
- Observe the applicable directives and national laws.

Ease of movement can be improved by lubricating or adjusting the hardware. All functional hardware components must be lubricated on a regular basis.

Recommended lubricants

- Roto NX / NT grease

INFO

The figure displays the positioning of potential lubrication points. The figure does not necessarily match the installed hardware. The quantity of lubrication points varies depending on the size and design of the element.

12.3.1 Roto AL Designo

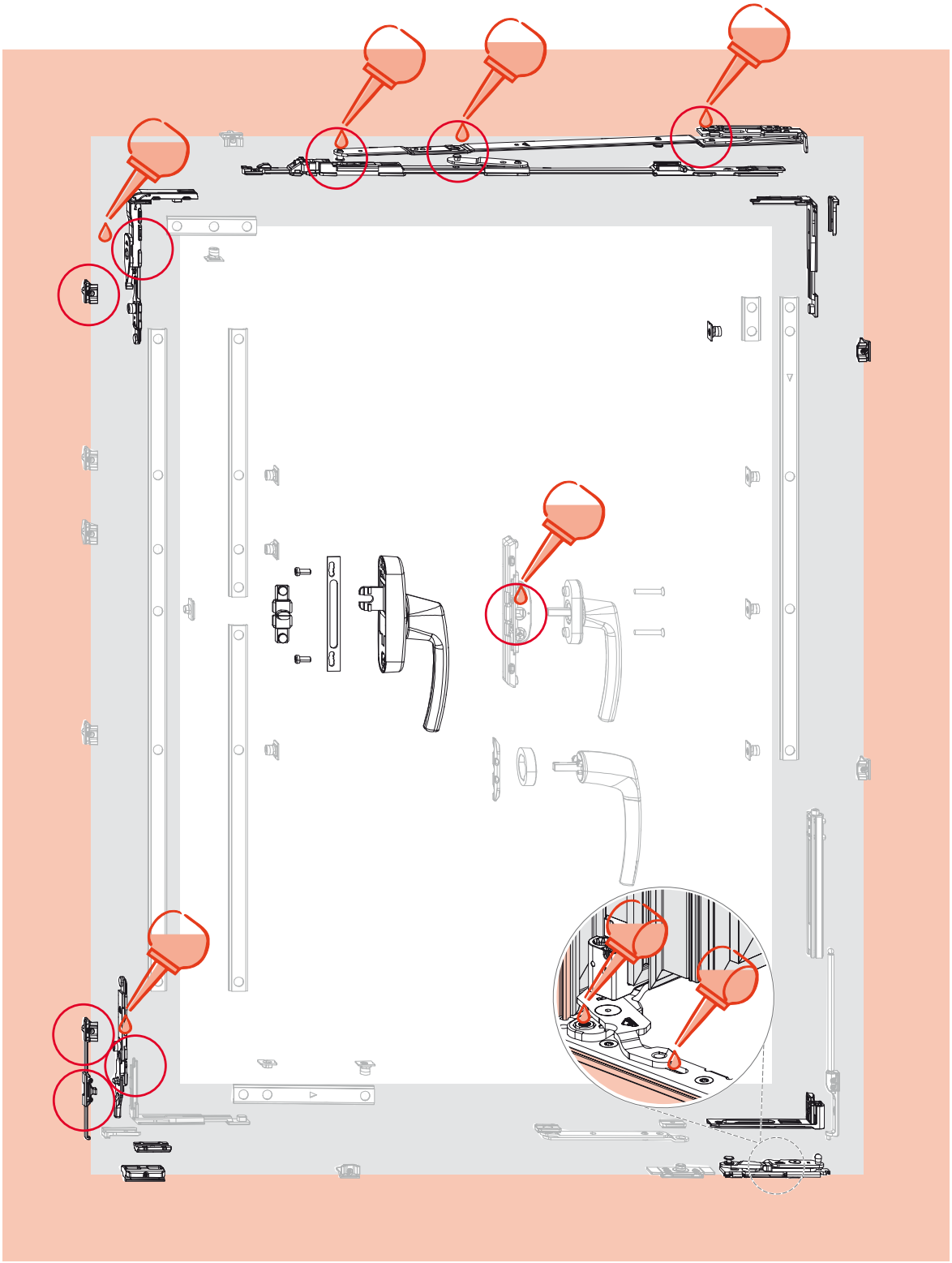

12.4 Performance test

WARNING

Improper repair work may pose a risk of death!

Improper maintenance may prevent the element from working properly and make it less safe to use.

- Always have repairs performed by a specialist company.

Check for proper operation:

- Inspect hardware components for damage, deformation and a firm fit.
- Check that windows or balcony doors run smoothly by opening and closing them.
- Check the window or balcony door gaskets for elasticity and fit.
- Check closed windows or balcony doors to ensure that they are leakproof.
- Locking and unlocking torque max. 10 Nm. The test can be performed using a torque wrench.

Have malfunctions remedied by a specialist company.

12.5 Repair

WARNING

Improper repair work may pose a risk of death!

Improper maintenance may prevent the element from working properly and make it less safe to use.

- Always have repairs performed by a specialist company.

ATTENTION

Improper screw fixings may cause property damage.

Loose or faulty screws can prevent the hardware from working properly.

- Check that the individual screws are secure and seated correctly.
- Tighten or replace loose or faulty screws.
- Use only the suggested screws.

Repair work includes replacing and repairing components and is only necessary if components have become damaged after wear or as a result of external circumstances. The hardware must be secured reliably in order to ensure that the element works properly and is safe to use.

The following tasks must only be performed by a specialist company:

- All adjustment work on the hardware,
- Replacing hardware or hardware components,
- Installing and removing windows, doors or balcony doors

The specialist company must observe the following:

- Perform the necessary repair work properly, according to generally recognised engineering practice and in accordance with the applicable regulations.
- Do not perform makeshift repairs on worn or damaged components.
- Only use original or approved spare parts for repairs.

12.6 Preventative measures

These measures are intended to preserve the surface finish and durability. They aim to prevent premature wear or contamination and thereby simplify maintenance.

Protection against corrosion

Cleaning agents can corrode the surface of the hardware.

Protect the hardware:

- Do not use aggressive or flammable liquids, acidic cleaners or abrasive cleaners.
- Only use mild, pH-neutral cleaning agents that have been diluted.

- Apply a thin protective film to the hardware, for example using a cloth soaked in oil.
- Only use high-quality components for repairs, such as stainless-steel screws.

Protection against dirt

Contamination prevents the hardware working properly.

Protect the hardware:

- Remove deposits and contaminants caused by construction materials before they bond with water, e.g. construction dust, plaster, stucco, mortar and cement.
- Always clean using a soft cloth.

Protection against (permanently) damp room air

Damp room air can lead to mould growth and corrosion caused by condensation.

Protect the hardware:

- Provide adequate ventilation for hardware, particularly during the construction phase.
- Intensively air out the room several times per day by opening all windows or balcony doors for approximately 15 minutes.

  If intensive airing is not an option, place the windows or balcony doors in the tilt position and provide airtight masking inside the room, e.g. if there is fresh screed that cannot be walked on or must not be exposed to drafts. Discharge any humidity present in the room air to the outside using condensation dryers.
- Establish a ventilation plan for more complex construction projects if necessary.
- Provide adequate ventilation during holiday periods as well.

13 Dismantling

WARNING

Improper dismantling may pose a risk of death!

The sash may fall during dismantling.

- Secure the sash to prevent it from falling, e.g. by using two people.
- Always have dismantling work performed by a specialist company.

CAUTION

Physical strain may cause injury and damage to health.

Carrying and lifting heavy loads for extended periods leads to physical injury in the long term.

- When carrying or lifting loads, maintain an ergonomically correct posture. The maximum permissible load is 25 kg for men and 10 kg for women.

INFO

Unless otherwise stated, dismantling is performed in reverse order to installation.

13.1 Handle

Removing the handle

1. Move the handle to the turn position (to the tilt position for TF).

2. Lift the escutcheon cover and turn it 90° [A].
   Undo the screws [B].
   Tool: Phillips screwdriver PH2

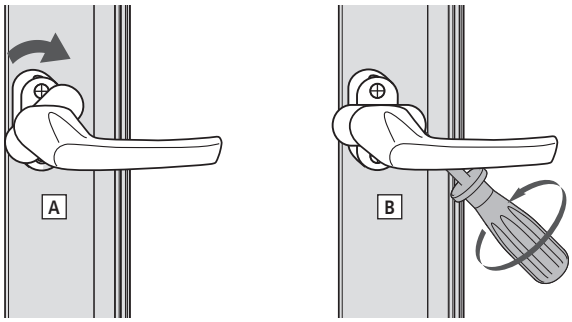

3. Remove the handle.

13.2 Flush-encased gearbox

Removing the flush-encased gearbox

1. Push the engaged clampable lugs towards the espagnolette and turn anticlockwise [C].
   Tool: flat-tip screwdriver 8 x 1.2 mm

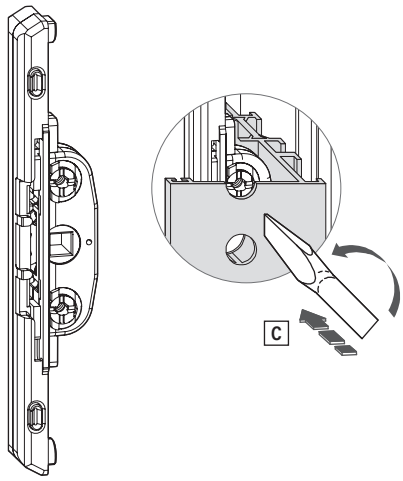

2. Remove the flush-encased gearbox by pulling it to the side.

13.3 Load transfer

Removing the load transfer

1. Use the adjusting screw [1] to fully unbend the load transfer spring.
   Tool: hex key (with ball-shaped head [2]) size 4

   INFO
   If the spring is not fully released, the sash cannot be rehinged.

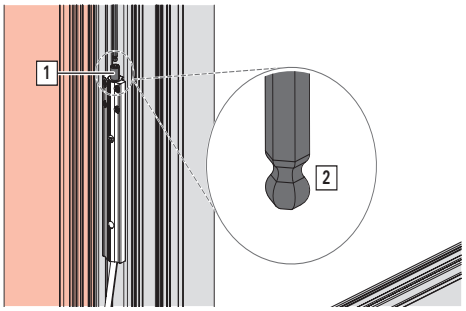

2. Unhinge the sash.

13.4 Sash stay 500

1. Move the handle to the turn position.

2. Open the sash slightly (by approx. 10°).
   Push down on the mishandling device and move the handle to the tilt position.
   Under normal circumstances, this constitutes incorrect operation of the hardware, but it is a necessary step in this case.

3. Lift the supporting arm upwards out of its bearing.

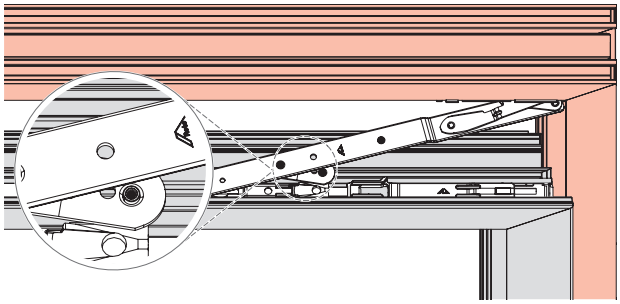

4. Push the sash towards the hinge side so that the stay arm cam [3] in the scissor stay guide slides forward up to the recess.

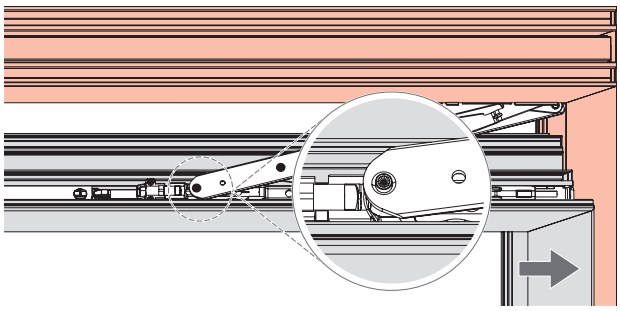

5. Unhinge the stay arm and tilt the sash away until the corner hinge is exposed enough to allow the sash to be lifted out of the pivot rest.

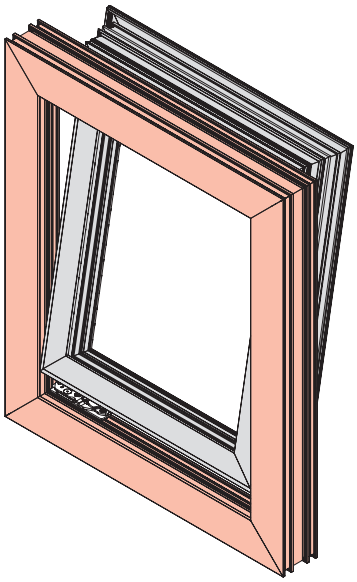

13.5 Sash stay 735

1. Move the handle to the turn position.

2. Open the sash slightly (by approx. 10°).

   Push down on the mishandling device and move the handle to the tilt position.

   Under normal circumstances, this constitutes incorrect operation of the hardware, but it is a necessary step in this case.

3. Lift the spring clip [1] using a screwdriver and push the supporting arm cam [2] downwards.

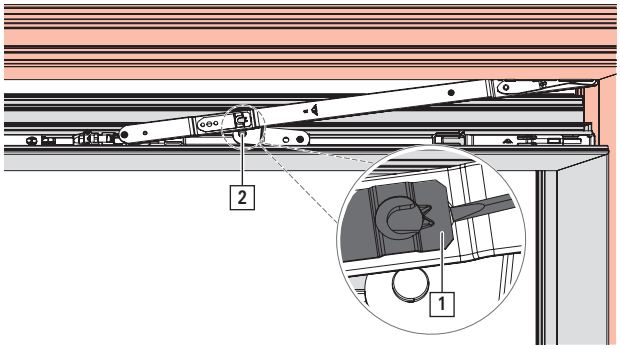

4. Push the sash towards the hinge side so that the stay arm cam [3] in the scissor stay guide slides forward up to the recess.

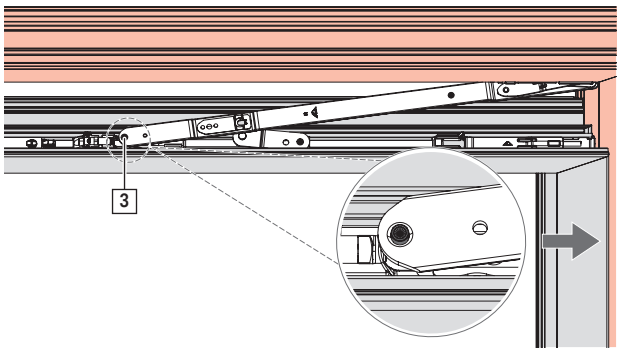

5. Unhinge the stay arm and tilt the sash away until the corner hinge is exposed enough to allow the sash to be lifted out of the pivot rest.

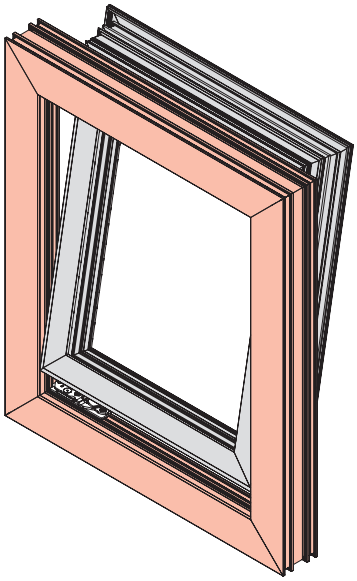

13.6 FM – second opening sash

1. Open the active floating-mullion sash and prevent it from swinging closed unintentionally.

2. Move the FM espagnolette handle to the turn position.

3. Open the passive floating-mullion sash approximately 30° – 50°.

4. Move the FM espagnolette handle to the locked position.

5. Secure the floating-mullion sash to prevent it from falling.

6. Slide the flat side of a screwdriver blade (blade min. 8 mm) under the stay arm next to the cam [1].

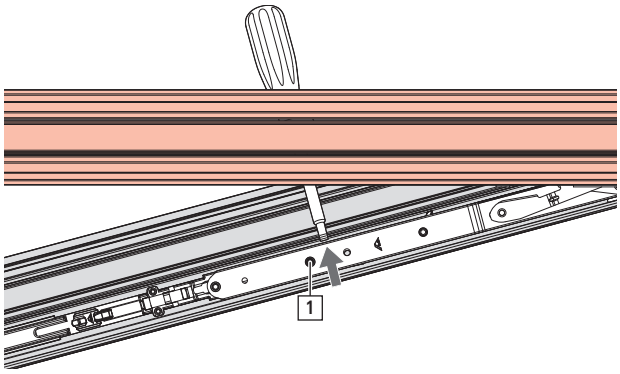

7. Turn the screwdriver blade to lever the cams [1] and [2] out of their inclusions.
   Push the sash towards the hinge side [A].

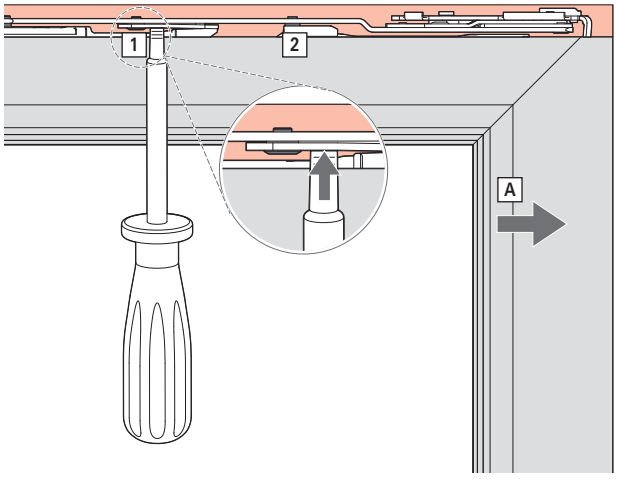

8. Lever the cam [3] out of its inclusion.

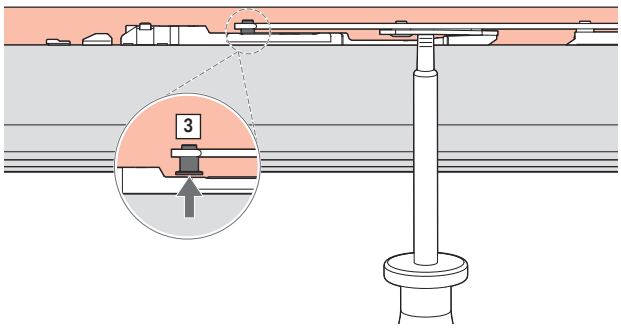

9. Close the passive floating-mullion sash.
   Before doing so, move the FM espagnolette handle to the turn position.

10. Tilt the passive floating-mullion sash and carefully guide it upwards out of the frame.

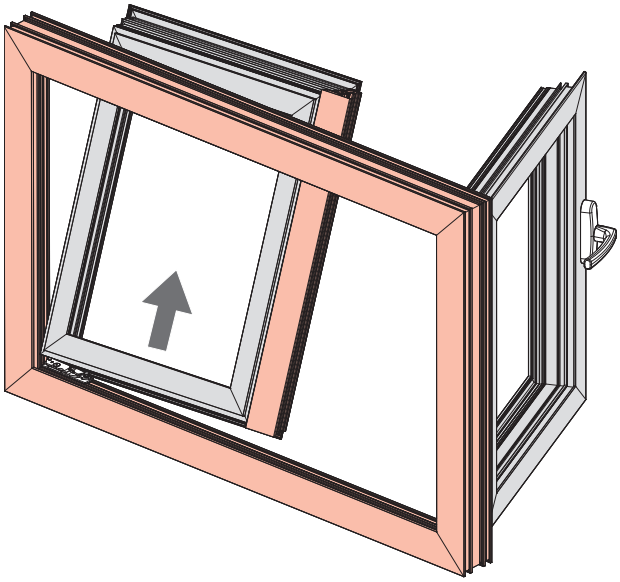

14 Transport

14.1 Transporting elements and hardware

DANGER

Improper transport poses a risk of death!

Improper procedures for transporting, loading or unloading elements may cause serious injuries and glass breakage as a result of the elements swinging open, falling or becoming overloaded.

- Note the applicable accident prevention regulations.
- Note force application points and reaction forces.
- Prevent the sash from opening uncontrollably.
- Avoid jerky movements.
- Use suitable transportation means and protective devices.
- Watch out for protruding components.
- Transport heavy loads with two people and use suitable transportation means (such as an industrial truck).

CAUTION

Trapped limbs may result in injuries.

The transported goods can skid, open, close or fall during transportation tasks. This can result in limbs being trapped and seriously injured.

- Never reach near the scissor stays.
- Close the sash after installation and secure it in place for transport.
- Wear safety gloves and protective footwear.

CAUTION

Physical strain may cause injury and damage to health.

Carrying and lifting heavy loads for extended periods leads to physical injury in the long term.

- When carrying or lifting loads, maintain an ergonomically correct posture. The maximum permissible load is 25 kg for men and 10 kg for women.

Hardware is supplied to the specialist company as complete sets. The components are packaged accordingly for each shipment. The instructions for safely transporting the hardware are described below.

Observe the following basic instructions when transporting hardware:

- Transport larger scopes of delivery using appropriate transportation means (such as industrial trucks).
- Note the transport weight in order to select appropriate transportation means.
- Immediately check the delivery for completeness and transport damage on receipt.

INFO

Submit a complaint about any defects as soon as they are identified. Claims for damages may only be made within the reclamation period.

Use the following transportation means for support when transporting, loading and unloading larger scopes of delivery:

- Industrial trucks, e.g. forklifts, telescopic handlers, pallet trucks

- Lifting equipment, e.g. transport nets, carry straps, round slings
- Protective devices, e.g. edge protection, spacer blocks

INFO
Industrial trucks and lifting devices may only be operated by qualified persons.

INFO
Lifting equipment and protective devices may only be used if they are in full working order.

14.2 Storing the hardware

Store all hardware components as follows until they are installed:

- Dry and protected
- On a level surface
- Protected against sunlight

14.3 Transport safety device

Transport safety device for flush-encased gearboxes with a handle without escutcheon.

Insert the transport safety device (included in the handle set) in the square hole after the flush-encased gearbox has been installed. Remove the transport safety device with the pull key before installing the handle.

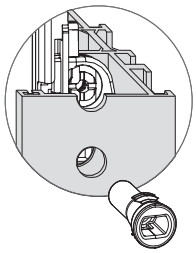

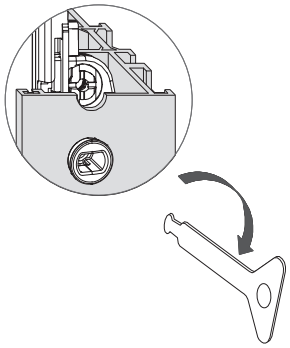

15 Disposal

ATTENTION

Incorrect disposal may pollute the environment.

Pieces of hardware are raw materials.

- Dispose of hardware for environmentally friendly material reutilisation as mixed scrap.

15.1 Disposing of packaging

The hardware is supplied as complete sets together with the packaging. Once unpacked, the installation company or builder is responsible for disposing of the packaging properly. The packaging materials are produced in accordance with current environmental protection standards. The materials can be recycled separately.

Follow the basic instructions below for the proper disposal of packaging:

- Do not dispose of packaging in household waste.
- Hand over packaging at local waste collection points or recycling centres.
- Observe the national regulations on the disposal of recyclable materials.
- Contact the local authorities if necessary.

15.2 Disposing of hardware

Once the hardware is finished with, the end user or builder is responsible for properly disposing of the windows, doors or balcony doors and the hardware, including any accessories. Hardware is produced in accordance with current environmental protection standards. The materials can be recycled separately.

Follow the basic instructions below for the proper disposal of hardware:

- Observe the information and specifications for disposal contained in the other applicable documents.
- Separate hardware components from windows, doors or balcony doors.
- Do not dispose of hardware in household waste.
- Hand over hardware at local waste collection points or recycling centres.
- Observe the national regulations on the disposal of recyclable materials.
- Contact the local authorities if necessary.

Roto Frank
Fenster- und Türtechnologie GmbH

Wilhelm-Frank-Platz 1
70771 Leinfelden-Echterdingen
Germany

Phone +49 (0) 711 7598 0
Fax +49 (0) 711 7598 253
info@roto-frank.com

www.roto-frank.com

From a single source: Optimum hardware systems to meet all challenges

Roto Window	Hardware systems for windows and balcony doors
Roto Sliding	Hardware systems for large sliding windows and doors
Roto Door	Matching hardware technology everything about doors
Roto Equipment	Additional technology for windows and doors