Window and Door Technology

Roto AL

Universal hardware for
aluminium windows and balcony doors

Installation, maintenance and operation instructions
for aluminium profiles

Contact

Roto Frank
Fenster- und Türtechnologie GmbH
Wilhelm-Frank-Platz 1
70771 Leinfelden-Echterdingen
Germany
Phone +49 711 7598 0
Fax +49 711 7598 253
info@roto-frank.com
www.roto-frank.com

1 General information ... 18

1.1 Version history ... 18

1.2 Instructions ... 19

1.3 Symbols ... 20

1.4 Pictographs ... 20

1.5 Product features ... 20

1.6 Abbreviations ... 21

1.7 Target groups ... 23

1.8 Target groups' obligation to give instructions ... 23

1.9 Copyright protection ... 24

1.10 Limitation of liability ... 24

1.11 Preserving the surface finish ... 25

2 Security ... 27

2.1 Presentation and structure of warning instructions ... 27

2.2 Security levels of warning instructions ... 27

2.3 Stipulated use ... 27

2.3.1 Misuse ... 28

2.3.2 Usage restriction ... 28

2.4 Stipulated use for end users ... 28

2.4.1 Misuse ... 29

2.5 Basic safety information ... 29

2.5.1 Installation ... 29

2.5.2 Use ... 30

2.5.3 Ambient conditions ... 31

2.6 Operation ... 31

3 Information on the product ... 33

3.1 General hardware characteristics ... 33

3.2 Application ranges ... 33

3.3 Application diagrams ... 33

3.3.1 Tilt&Turn / TiltFirst hardware ... 34

3.3.1.1 90 kg ... 34

3.3.1.2 130 kg ... 35

3.3.1.3 160 kg ... 36
3.3.1.4 200 kg ... 37
3.3.2 Turn-Only hardware ... 38
3.3.2.1 50 kg ... 38
3.3.2.2 80 kg ... 39
3.3.2.3 100 kg ... 40
3.3.2.4 90 kg ... 41
3.3.2.5 130 kg ... 42
3.3.2.6 160 kg ... 43
3.3.2.7 200 kg ... 44
3.3.2.8 300 kg ... 45
3.3.3 Tilt-Only hardware ... 46
3.3.3.1 130 kg ... 46
3.3.3.2 200 kg ... 47
3.3.3.3 130 kg ... 48
3.3.3.4 200 kg ... 49
3.4 Minimum sash widths and heights ... 50
3.5 Profile cross sections ... 51
3.6 Space requirement for hardware ... 54

4 Hardware overviews ... 56
4.1 Tilt&Turn hardware ... 58
4.1.1 T&T | 90 - 130 kg ... 58
4.1.2 T&T | RC 2 | 90 - 130 kg ... 62
4.1.3 T&T | RC 3 | 90 - 130 kg ... 66
4.1.4 T&T | accessible | 90 - 130 kg ... 70
4.1.5 T&T | 160 kg ... 74
4.1.6 T&T | RC 2 | 160 kg ... 78
4.1.7 T&T | RC 3 | 160 kg ... 82
4.1.8 T&T | accessible | 160 kg ... 86
4.1.9 T&T | accessible | RC 2 | 160 kg ... 90
4.1.10 T&T | 200 kg ... 94
4.1.11 T&T | RC 2 | 200 kg ... 98

4.1.12 T&T | RC 3 | 200 kg ... 102

4.2 TiltFirst hardware ... 106

4.2.1 TF | 90 -130 kg ... 106

4.2.2 TF | RC 2 | 90 - 130 kg ... 110

4.2.3 TF | RC 3 | 90 - 130 kg ... 114

4.2.4 TF | 160 kg ... 118

4.2.5 TF | RC 2 | 160 kg ... 122

4.2.6 TF | RC 3 | 160 kg ... 126

4.2.7 TF | 200 kg ... 130

4.2.8 TF | RC 2 | 200 kg ... 134

4.2.9 TF | RC 3 | 200 kg ... 138

4.3 Turn-Only hardware ... 142

4.3.1 T-O with CD hinge | 50 kg ... 142

4.3.2 T-O with CD hinge | 80 kg ... 146

4.3.3 T-O with CD hinge | 100 kg ... 150

4.3.4 T-O | 90 - 130 kg ... 154

4.3.5 T-O | RC 2 | 90 - 130 kg ... 158

4.3.6 T-O | RC 3 | 90 - 130 kg ... 162

4.3.7 T-O | accessible | 90 - 130 kg ... 166

4.3.8 T-O-C | 160 kg ... 170

4.3.9 T-O | 200 kg ... 174

4.3.10 T-O | 300 kg ... 178

4.4 Tilt-Only hardware ... 182

4.4.1 TiSt | 130 kg ... 182

4.4.2 TiSt | RC 2 | 130 kg ... 186

4.4.3 TiSt | RC 3 | 130 kg ... 190

4.4.4 TiSt | 200 kg ... 194

4.4.5 TiSs | 130 kg ... 198

4.4.6 TiSs | RC 2 | 130 kg ... 202

4.4.7 TiSs | RC 3 | 130 kg ... 206

4.4.8 TiSs | 200 kg ... 210

4.5 Floating-mullion hardware ... 214

4.5.1 FM | 90 - 160 kg ... 214

4.5.2 FM (second opening sash) | accessible | 90 - 130 kg ... 216
4.5.3 FM-Su | 90 - 130 kg ... 220
4.5.4 FM-SuN | 90 - 130 kg ... 222
4.5.5 FM-Sh | 90 - 130 kg ... 224
4.5.6 FM-R | 90 - 130 kg ... 226
4.5.7 FM, couplable (second opening sash) | 90 - 130 kg ... 228
4.5.8 FM, couplable (second opening sash) | RC 2 | 90 - 130 kg ... 232
4.5.9 FM, couplable (second opening sash) | RC 3 | 90 - 130 kg ... 236
4.5.10 FM, couplable (second opening sash) | 160 kg ... 240
4.5.11 FM, couplable (second opening sash) | RC 2 | 160 kg ... 244
4.5.12 FM, couplable (second opening sash) | RC 3 | 160 kg ... 248

5 Jigs / tools ... 251
5.1 Drilling jigs ... 251
5.2 Positioning jigs ... 254
5.3 Tools ... 255
5.3.1 Hexalobular socket screwdriver ... 255
5.3.2 Extractor handle ... 256
5.3.3 Punches ... 256
5.3.3.1 Pneumatic punch ... 256

6 Large packaging for individual components ... 257
6.1 Locking components ... 257
6.1.1 Corner drives and forks ... 257
6.1.2 Deadbolt ... 259
6.1.2.1 Tilt lock bolt ... 259
6.1.2.2 Shootbolt rod ... 260
6.1.2.3 Shootbolt ... 260
6.1.3 Run-up blocks ... 261
6.1.4 Tilt striker ... 262
6.1.5 Locking components ... 263
6.1.6 Cam ... 264
6.2 Hinge side ... 265
6.2.1 Top ... 265

6.2.2 Centre ... 267
6.2.3 Bottom ... 269
6.2.3.1 Pivot rest ... 269
6.2.3.2 Corner hinge ... 270
6.3 Espagnolette and connector ... 271
6.3.1 Geared-handle ... 271
6.3.2 Flush-encased gearbox ... 272
6.3.3 Floating-mullion espagnolette ... 273
6.4 Accessories ... 274
6.4.1 Connecting rods ... 274
6.4.2 [16] SEC connector ... 275
6.4.3 [37] SEC rebate-clearance reduction CD ... 275
6.4.4 Reducing sleeve ... 275
6.4.5 Screws ... 276
6.4.5.1 Countersunk screws ... 276
6.4.5.2 Cylinder screws ... 277

7 Large packaging for sets ... 278
7.1 Locking components ... 278
7.1.1 Tilt-Only hardware ... 278
7.1.2 Floating-mullion hardware ... 279
7.2 Hinge side ... 279
7.2.1 Tilt&Turn / TiltFirst hardware ... 279
7.2.2 Turn-Only hardware ... 280
7.3 Espagnolette and connector ... 282
7.3.1 Flush-encased gearbox ... 282
7.3.2 Floating-mullion espagnolette ... 283
7.4 Accessories ... 284
7.4.1 Turn restrictor ... 284
7.4.2 Turn locks ... 285
7.4.3 Bullet catch ... 286
7.4.4 Night vent ... 287
7.4.5 Screws ... 288

7.4.5.1 Rivet nut set ... 288

8 Installation ... 289

8.1 Processing instructions ... 289

8.2 Screw connections ... 290

8.2.1 Screw fixing specifications for aluminium profiles ... 291

8.3 Preparing for installation ... 292

8.3.1 Preparing the connecting rods ... 292

8.3.2 Opening the sash corners ... 293

8.3.3 CL corner drive – ECC-groove ... 294

8.3.4 Rivet nuts ... 295

8.3.5 Cutting gaskets to size ... 295

8.3.6 Connecting the coupling points ... 296

8.4 General installation ... 297

8.4.1 Sash ... 297

8.4.1.1 Installation sequence ... 297

8.4.1.2 T connector ... 298

8.4.1.3 Connector bolt, insertable ... 298

8.4.1.4 SEC espagnolette protection ... 299

8.4.1.5 Flush-encased gearbox ... 301

8.4.1.6 Cam, insertable ... 302

8.4.1.7 Cam, insertable – ECC-groove ... 303

8.4.1.8 Corner drives ... 304

8.4.2 Frame ... 305

8.4.2.1 Strikers ... 305

8.4.2.2 SEC rebate-clearance reduction corner drive ... 307

8.5 Tilt&Turn / TiltFirst hardware ... 308

8.5.1 Drilling and routing dimensions ... 308

8.5.1.1 Stay bearing fixing connecting-link | 90 - 130 kg ... 308

8.5.1.2 Fixing connecting-links for stay bearing and counter bearing | 160 kg ... 308

8.5.1.3 Stay bearing | 200 kg ... 309

8.5.1.4 Pivot rest | 90 - 160 kg ... 309

8.5.1.5 Pivot rest | 200 kg ... 310

8.5.1.6 TF additional stay arm | 90 - 130 kg....310
8.5.2 Sash....311
8.5.2.1 Corner hinge | 90 - 130 kg....311
8.5.2.2 Corner hinge | 160 kg....312
8.5.2.3 Corner hinge | 200 kg....312
8.5.2.4 Stay hinge | 90 - 160 kg....313
8.5.2.5 Sash stay | 90 - 200 kg....313
8.5.2.6 Additional stay arm | 90 - 160 kg....316
8.5.2.7 Additional stay arm | 200 kg....317
8.5.2.8 TF additional stay arm | 90 - 130 kg....318
8.5.2.9 TF additional stay arm | 160 - 200 kg....319
8.5.2.10 Sash lifter | 200 kg....320
8.5.3 Frame....321
8.5.3.1 Pivot rest | 90 - 160 kg....321
8.5.3.2 Pivot rest | 200 kg....322
8.5.3.3 Fixing connecting-link | 90 - 130 kg....323
8.5.3.4 Fixing connecting-link | 160 kg....324
8.5.3.5 Stay bearing | 90 - 130 kg....326
8.5.3.6 Stay bearing | 160 kg....327
8.5.3.7 Stay bearing | 200 kg....328
8.5.3.8 Additional stay arm | 90 - 200 kg....328
8.5.3.9 Sash lifter | 200 kg....329
8.5.4 Joining the sash and frame....330
8.5.4.1 T&T hinge side | 90 - 130 kg....330
8.5.4.2 T&T hinge side | 160 kg....332
8.5.4.3 T&T hinge side | 200 kg....333
8.6 Turn-Only hardware....334
8.6.1 Drilling and routing dimensions....334
8.6.1.1 Clamping block | 200 kg....334
8.6.1.2 Clamping block | 300 kg....335
8.6.1.3 CD hinge | 80 kg or 100 kg....336
8.6.1.4 T-O hinge | 300 kg....337
8.6.1.5 CL hinge | 300 kg....337

8.6.1.6 T-O corner hinge | 300 kg ... 338
8.6.1.7 Stay bearing fixing connecting-link | 90 - 130 kg ... 338
8.6.1.8 Fixing connecting-links for stay bearing and counter bearing | 160 kg ... 339
8.6.1.9 Stay bearing | 200 kg ... 339
8.6.1.10 T-O bearing | 300 kg ... 340
8.6.1.11 CL T-O bearing | 200 kg ... 341
8.6.1.12 CL bearing | 300 kg ... 341
8.6.1.13 Pivot rest | 90 - 160 kg ... 342
8.6.1.14 Pivot rest | 200 kg ... 342
8.6.1.15 Pivot rest | 300 kg ... 343
8.6.2 Sash ... 344
8.6.2.1 Corner hinge | 90 - 130 kg ... 344
8.6.2.2 Corner hinge | 160 kg ... 345
8.6.2.3 Corner hinge | 200 kg ... 345
8.6.2.4 Corner hinge | 300 kg ... 346
8.6.2.5 CD hinge | 50 kg: sash component (hinge) ... 346
8.6.2.6 CD hinge | 80 kg or 100 kg: sash component (hinge) ... 348
8.6.2.7 T-O hinge | 90 kg ... 350
8.6.2.8 Turn-Only stay hinge | 90 - 160 kg ... 351
8.6.2.9 Turn-Only hinge | 200 kg ... 353
8.6.2.10 Turn-Only hinge | 300 kg ... 355
8.6.2.11 CL sash component ... 356
8.6.2.12 Locking sleeve ... 357
8.6.2.13 Sash lifter | 200 kg ... 358
8.6.3 Frame ... 359
8.6.3.1 CD hinge | 50 kg: frame component (bearing) ... 359
8.6.3.2 CD hinge | 80 kg or 100 kg: frame component (bearing) ... 361
8.6.3.3 Pivot rest | 90 - 160 kg ... 364
8.6.3.4 Pivot rest | 200 kg ... 364
8.6.3.5 Pivot rest | 300 kg ... 365
8.6.3.6 Fixing connecting-link | 90 - 130 kg ... 366
8.6.3.7 Fixing connecting-link | 160 kg ... 367
8.6.3.8 T-O bearing | 90 - 130 kg ... 368

8.6.3.9 Stay bearing | 90 - 130 kg....369
8.6.3.10 Stay bearing | 160 kg....370
8.6.3.11 Stay bearing | 200 kg....371
8.6.3.12 Stay bearing | 300 kg....371
8.6.3.13 CL frame component....372
8.6.3.14 Sash lifter stop | 200 - 300 kg....372
8.6.4 Joining the sash and frame....373
8.6.4.1 CD hinge | 50 kg....373
8.6.4.2 CD hinge | 80 kg or 100 kg....374
8.6.4.3 T-O hinge side | 90 - 130 kg....375
8.6.4.4 T-O-C hinge side | 90 - 130 kg....377
8.6.4.5 T-O-C hinge side | 160 kg....379
8.6.4.6 T-O hinge side | 200 kg....381
8.6.4.7 T-O hinge side | 300 kg....383
8.6.4.8 Sash lifter run-up block, complete | 200 - 300 kg....385
8.7 Tilt-Only hardware....386
8.7.1 Sash....386
8.7.1.1 T-O hinge | 90 kg....386
8.7.1.2 Turn-Only hinge | 200 kg....387
8.7.1.3 CL sash component....388
8.7.1.4 Locking sleeve....389
8.7.1.5 Tilt-Only stay arm slide bar (TiSt)....390
8.7.1.6 Tilt-Only stay arm (TiSs)....391
8.7.2 Frame....392
8.7.2.1 T-O bearing | 130 kg....392
8.7.2.2 Stay bearing | 200 kg....392
8.7.2.3 CL frame component....393
8.7.2.4 Tilt-Only stay arm (TiSt)....393
8.7.2.5 Tilt-Only stay arm (TiSs)....394
8.7.3 Joining the sash and frame....394
8.7.3.1 TiS hinge side | 130 kg....394
8.7.3.2 TiS hinge side | 200 kg....395
8.7.3.3 Tilt-Only stay arm (TiSt)....396

8.7.3.4 Tilt-Only stay arm (TiSs) ... 397

8.8 Floating-mullion hardware ... 398

8.8.1 Drilling and routing dimensions ... 398

8.8.1.1 FM espagnolette, internal ... 398

8.8.1.2 Shootbolt ... 399

8.8.2 Sash ... 400

8.8.2.1 FM espagnolette ... 400

8.8.2.2 FM-Su espagnolette ... 401

8.8.2.3 FM-SuN espagnolette ... 402

8.8.2.4 FM-Sh espagnolette ... 403

8.8.2.5 FM-R espagnolette ... 404

8.9 Accessories ... 405

8.9.1 Drilling and routing dimensions ... 405

8.9.1.1 Roto Line AL geared-handle ... 405

8.9.1.2 Flush-encased gearbox with / without mishandling device ... 405

8.9.1.3 Window handle – standard ... 406

8.9.1.4 Flush-encased gearbox with handle without escutcheon ... 406

8.9.1.5 Turn lock ... 407

8.9.1.6 Locking plate set ... 407

8.9.2 Roto handles ... 408

8.9.2.1 Handle without escutcheon ... 408

8.9.2.2 Roto Line | window handle, standard ... 409

8.9.2.3 Roto Line | window handle for geared-handle ... 409

8.9.3 Turn lock and locking plate set ... 410

8.9.4 Bullet catch ... 411

8.9.5 Turn restrictor ... 413

8.9.5.1 Turn restrictor, braked ... 413

8.9.5.2 Turn restrictor, braked, damped ... 415

8.9.6 Night vent ... 417

9 Installation drawings ... 419

9.1 Striker positions ... 419

9.1.1 Explanation ... 419

9.1.2 Standard....420

9.2 Tilt&Turn hardware.... 422

9.2.1 Explanation.... 422

9.2.2 T&T | 90 - 130 kg....423

9.2.3 T&T | RC 2 | 90 - 130 kg.... 424

9.2.4 T&T | RC 3 | 90 - 130 kg.... 425

9.2.5 T&T additional stay arms | 90 - 130 kg....426

9.2.6 T&T accessible | 90 - 130 kg.... 427

9.2.7 T&T | 160 kg....428

9.2.8 T&T | RC 2 | 160 kg.... 429

9.2.9 T&T | RC 3 | 160 kg.... 430

9.2.10 T&T additional stay arms | 160 kg....431

9.2.11 T&T | accessible | 160 kg.... 432

9.2.12 T&T | accessible | RC 2 | 160 kg....433

9.2.13 T&T | 200 kg....434

9.2.14 T&T | RC 2 | 200 kg.... 435

9.2.15 T&T | RC 3 | 200 kg.... 436

9.2.16 T&T additional stay arms | 200 kg....437

9.2.17 T&T night vent with additional stay arm.... 438

9.2.18 T&T night vent without additional stay arm....439

9.3 TiltFirst hardware.... 440

9.3.1 Explanation.... 440

9.3.2 TF | 90 - 130 kg.... 441

9.3.3 TF | RC 2 | 90 - 130 kg....442

9.3.4 TF | RC 3 | 90 - 130 kg....443

9.3.5 TF additional stay arms | 90 - 130 kg.... 444

9.3.6 TF | 160 kg.... 445

9.3.7 TF | RC 2 | 160 kg....446

9.3.8 TF | RC 3 | 160 kg....447

9.3.9 TF additional stay arms | 160 kg.... 448

9.3.10 TF | 200 kg.... 449

9.3.11 TF | RC 2 | 200 kg....450

9.3.12 TF | RC 3 | 200 kg....451

9.3.13 TF additional stay arms | 200 kg ... 452

9.4 Turn-Only hardware ... 453

9.4.1 Explanation ... 453

9.4.2 T-O hinge side with CD hinge | 50 kg, 80 kg, 100 kg ... 455

9.4.3 T-O hinge side | 90 - 130 kg ... 456

9.4.4 T-O | 90 - 130 kg ... 457

9.4.5 T-O | RC 2 | 90 - 130 kg ... 458

9.4.6 T-O | RC 3 | 90 - 130 kg ... 459

9.4.7 T-O | accessible | 90 - 130 kg ... 460

9.4.8 T-O-C hinge side | 160 kg ... 461

9.4.9 T-O-C | 160 kg ... 462

9.4.10 T-O-C | RC 2 | 160 kg ... 463

9.4.11 T-O-C | RC 3 | 160 kg ... 464

9.4.12 T-O | 200 kg ... 465

9.4.13 T-O | 300 kg ... 466

9.5 Tilt-Only hardware ... 467

9.5.1 Explanation ... 467

9.5.2 TiSt with CD hinge | 50 kg ... 468

9.5.3 TiS hinge side | 130 kg ... 469

9.5.4 TiS hinge side | 200 kg ... 470

9.5.5 TiSt | 130 kg ... 471

9.5.6 TiSt | RC 2 | 130 kg ... 472

9.5.7 TiSt | RC 3 | 130 kg ... 473

9.5.8 TiSt | 200 kg ... 474

9.5.9 TiSt night vent ... 475

9.5.10 TiSs | 130 kg ... 476

9.5.11 TiSs | RC 2 | 130 kg ... 477

9.5.12 TiSs | RC 3 | 130 kg ... 478

9.5.13 TiSs | 200 kg ... 479

9.6 Floating-mullion hardware ... 480

9.6.1 Explanation ... 480

9.6.2 FM and FM, couplable | accessible ... 482

9.6.3 FM-Su and FM-R ... 483

9.6.4 FM-SuN and FM-Sh....484
9.6.5 FM, couplable | 90 - 130 kg....485
9.6.6 FM, couplable | RC 2 | 90 - 130 kg....486
9.6.7 FM, couplable | RC 3 | 90 - 130 kg....487
9.6.8 FM, couplable | 160 kg....488
9.6.9 FM, couplable | RC 2 | 160 kg....489
9.6.10 FM, couplable | RC 3 | 160 kg....490
9.6.11 FM, couplable | SEC locking | RC 2 / RC 3....491

10 Adjustment....492
10.1 Gasket compression adjustment....492
10.1.1 Cam, insertable....492
10.2 Tilt&Turn hardware....493
10.2.1 Lateral adjustment....493
10.2.1.1 Sash stay | 90 - 160 kg....493
10.2.1.2 Sash stay | 200 kg....494
10.2.1.3 Pivot rest | 90 - 160 kg....494
10.2.2 Height adjustment....495
10.2.2.1 Pivot rest | 90 - 130 kg....495
10.2.2.2 Corner hinge | 160 kg....496
10.2.2.3 Pivot rest | 200 kg....496
10.2.2.4 Sash lifter....497
10.3 TiltFirst hardware....497
10.3.1 Lateral adjustment....497
10.3.1.1 Sash stay | 90 - 160 kg....497
10.3.1.2 Pivot rest | 90 - 160 kg....498
10.3.2 Height adjustment....498
10.3.2.1 Pivot rest | 90 - 130 kg....498
10.3.2.2 Corner hinge | 160 kg....499
10.4 Turn-Only hardware....500
10.4.1 Lateral adjustment....500
10.4.1.1 CD hinge | 50 kg....500
10.4.1.2 CD hinge | 80 kg or 100 kg....500

10.4.1.3 Pivot rest | 90 - 160 kg 501
10.4.1.4 Turn-Only stay hinge | 90 - 160 kg 502
10.4.2 Height adjustment 502
10.4.2.1 Pivot rest | 90 - 130 kg 502
10.4.2.2 Corner hinge | 160 kg 503
10.4.2.3 Pivot rest | 200 kg 504
10.4.2.4 Corner hinge | 300 kg 504
10.4.2.5 Sash lifter 505

11 Operation 506
11.1 Operating information 506
11.1.1 Handle position with Tilt&Turn hardware 506
11.1.2 Handle position with TiltFirst hardware 506
11.1.3 Handle position with Turn-Only hardware 507
11.1.4 Handle position with Tilt-Only hardware 507
11.1.5 Incorrect position 507
11.2 Fault assistance 508

12 Maintenance 509
12.1 Maintenance intervals 510
12.2 Cleaning 510
12.3 Care 510
12.3.1 Roto AL 511
12.4 Performance test 512
12.5 Repair 512
12.6 Preventative measures 512

13 Dismantling 514
13.1 Handle 514
13.2 Flush-encased gearbox 515
13.3 Stay-bearing pin 515
13.4 Tilt-Only stay arm 516

14 Transport 517
14.1 Transporting elements and hardware 517

14.2 Storing the hardware 518

14.3 Transport safety device 518

15 Disposal 519

15.1 Disposing of packaging 519

15.2 Disposing of hardware 519

1 General information

1.1 Version history

Version	Date	Changes
v0	12.12.2014	Summary of all folded installation plans
v1	02.03.2015	
v2	20.06.2017	
v3	23.10.2017	
v4	13.03.2018	
v5	31.01.2020	**IMO restructured:** ■ Division according to opening types removed and moved to the "Hardware overviews", "Installation", "Installation drawings" and "Adjustment" chapters. ■ "Large packaging for individual components" and "Large packaging for sets" chapters added. ■ Torques standardised.
		New content: ■ SH application ranges up to 3000 mm (where possible) ■ TiSt and TiSs | 200 kg ■ TF additional stay arm set | 160 kg and 200 kg ■ CD hinge | 50 kg with new clamp strip ■ CD hinge | 80 kg and 100 kg ■ Accessible threshold for T&T | 90 - 130 kg, T&T | 160 kg (incl. RC 2), T-O | 90 - 130 kg, FM (second opening sash) | 90 - 130 kg
		Hardware overviews amended: ■ Standardised classification according to basic set, espagnolette and connector, height-dependent components, width-dependent components, weight-dependent components, optional ■ Required order quantity (🛒)
		Installation changed: ■ Sash □ Cutting gaskets to size □ CD hinge | 50 kg □ Corner hinge | 300 kg ■ Frame □ CD hinge | 50 kg ■ Joining the sash and frame □ CD hinge | 50 kg
		Application diagrams and installation drawings added and changed. Table of minimum sash widths and heights changed. Space requirement for hardware changed. Contents of T connector set changed (espagnolette support must be ordered separately). Packaging units changed. Jigs / tools: drilling jig sash stay 400, sash stay 600, additional stay arm material number changed. Connecting rod fixed dimensions changed. Installation added and changed. Adjustment of CD hinge | 50 kg and corner hinge | 160 kg changed.
v6	10.02.2020	T&T / TF hinge side set | 130 kg: name changed to T&T / TF hinge side set | 90 kg. CD hinge | 80 kg and 100 kg: material number for untreated version added. Installation drawing TF | RC 2 | 90 - 130 kg swapped with installation drawing TF | RC 3| 90 - 130 kg (content was linked incorrectly).

1.2 Instructions

This manual contains important information, instructions, application diagrams (max. sash sizes and weights) and assembly instructions for the installation, maintenance and operation of hardware.

The information and instructions contained in this document refer to products belonging to the Roto hardware system named on the front page.

All steps must be completed in sequence.

The following documents apply in addition to these instructions:

- Handles catalogue: CTL_1

The following guidelines also apply:

Gütegemeinschaft Schlösser und Beschläge e. V

- Directive TBDK: Attachment of supporting fitting components for turn-only and tilt&turn fittings
- Directive VHBE: Hardware for windows and balcony doors – Guidelines/ advice for end-users
- Directive VHBH: Hardware for windows and balcony doors – Guidelines/ advice on the product and on liability

VFF (German Window and Facade Association)

- TLE.01: Correct handling of ready-to-install windows and external doors during transport, storage and installation
- WP.01: Maintenance of windows, facades and external doors – Maintenance, care and inspection – Information for sales
- WP.02: Maintenance of windows, facades and external doors – Maintenance, care and inspection – Measures and documents
- WP.03: Maintenance of windows, facades and external doors – Maintenance, care and inspection – Maintenance agreement

Additional guidelines

- Instructions and information issued by profile manufacturers, e.g. manufacturers of windows and balcony doors
- Instructions and information issued by screw manufacturers
- The applicable regulations, directives and national laws

Storing the instructions

These instructions are an important part of the product. The instructions must be stored so that they are always to hand.

Explanation of the markings

The manual uses the following markings for emphasis (e.g. in figures or instructions):

Marking	Meaning
	Sash
	Frame
	Drill holes, routing or screw positions
	Unaffected components Indirectly affected components

Marking	Meaning
■	Components that have just been described Arrows or movements
1	Item number
[1]	Legend
[A]	Steps

INFO
Any dimensions without a unit in the instructions are given in millimetres (mm). Other units of measurement are clearly indicated by the presence of the differing unit.

INFO
Figures are provided in the right-hand version (DIN 107).

1.3 Symbols

Symbol	Meaning
■	First-level list
□	Second-level list
→	(Cross-)reference
▷	Result
▶	Unnumbered step
1.	Numbered step
a.	Numbered second-level step
⇨	Requirement

1.4 Pictographs

Symbol	Meaning
	Turn-Only
	Tilt&Turn
	TiltFirst
	Tilt-Only
	Aluminium

1.5 Product features

Symbol	Meaning
#	Quantity
🛒	Order quantity

Symbol	Meaning
	Description
	Width
	Colour
	Colour code, Roto
	Sash width
	Sash weight
	Sash height
	Size
	Height
	Information
	Tilt distance
	Length
№	Material number
	Installation type
	Position
	Frame groove
[*]	Collective call-out
	Type of screws
	Packaging unit

1.6 Abbreviations

Abbreviation	Meaning
Fig.	Figure
AL	Aluminium
HP	Hinge passage
HS	Hinge side
CG	Glass clearance dimension
CTL	Catalogue
TR	Turn restrictor
TR size 1	with damped / braked turn restrictor size 1
TR size 2	with damped / braked turn restrictor size 2
T-O	Turn-Only hardware
T-O-C	Turn-Only hardware, comfort
T-O-CD	Turn-Only hardware CD
T-O-H	Turn-Only hardware with centre lock
DIN L / R	DIN left / right
T&T	Tilt&Turn hardware
FG	Flush-encased gearbox

Abbreviation	Meaning
CD	Corner drive
SW	Sash width
S.kg	Sash weight
SH	Sash height
RC	Rebate clearance
SL	Sash lifter
br. TR	Braked turn restrictor
HH	Handle height
ESP	Espagnolette
IMO	Installation instructions
incl.	including
ISR	Hexalobular socket
TiS	Tilt-Only hardware
TiSt	Tilt-Only hardware, handle at the top
TiSs	Tilt-Only hardware, handle at the side
kN	Kilonewtons
kg	Kilograms
compl.	complete
L	Left
LG	Long
M	Metric
m^2	Square metres
Max.	Maximum
CH	Central hinge
Min.	Minimum
mm	Millimetres
With MD	With mishandling device
CL	Centre lock
Nm	Torque
No.	Number
Not sh.	Not shown
Without MD	Without mishandling device
TP	Top part
PW	Profile weight
Pos.	Position
R	Right
FWi	Frame width, internal
RC	Resistance class
FHi	Frame height, internal
Count. screw	Countersunk screw
SP. COL.	Special colour
SEC	Security
MD	Mishandling device
ST	Striker
FM	Floating-mullion espagnolette, internal
Pc(s)	Piece(s)
FM-Su	Floating-mullion espagnolette, surface-mounted
FM-SuN	Floating-mullion espagnolette, surface-mounted, narrow version
FM-Sh	Floating-mullion shootbolt
FM-R	Floating-mullion espagnolette, slider
SW	Key size
CR1	Connecting rod designation, e.g. connecting rod 1
TF	TiltFirst hardware
OW	Overlap width
OH	Overlap height
BP	Bottom part
var.	Variable
VB	Multi-ported striker

Abbreviation	Meaning
PU	Packaging unit
SR	Shootbolt rod
Cyl.	Cylinder

1.7 Target groups

The information in this document is directed at the following target groups:

Hardware dealers

The “hardware dealers” target group includes all companies and individuals that purchase hardware from hardware manufacturers for resale, without modifying or further processing the hardware.

Window and balcony door manufacturers

The “window and balcony door manufacturers” target group includes all companies and individuals that purchase hardware from hardware manufacturers or hardware dealers and further process the hardware by integrating it in windows and balcony doors.

Building element dealers or installation companies

The “building element dealers or installation companies” target group includes all companies and individuals that purchase windows and balcony doors from window and balcony door manufacturers for resale and for installation in construction projects, without modifying the windows or balcony doors.

Builders

The “builders” target group includes all companies and individuals who place orders for the manufacture of windows and balcony doors for installation in their construction projects.

End users

The “end users” target group includes all individuals who use the installed windows and balcony doors.

1.8 Target groups’ obligation to give instructions

INFO

Each target group must fulfil their obligation to give instructions in full.

Unless specified otherwise in the text below, documents and information can be passed on as a printed document, on a data storage device or via the Internet.

Responsibility of hardware dealers

Hardware dealers must pass the following documents on to the window and balcony door manufacturer:

- Catalogue
- Installation, maintenance and operation instructions
- Directive on attachment of supporting fitting components for turn-only and tilt&turn fittings (TBDK)
- Guidelines/advice on the product and on liability (VHBH)

- Guidelines/advice for end-users (VHBE)

Responsibility of the window and balcony door manufacturer

The window and balcony door manufacturer must pass the following documents on to building element dealers or the builder, even if a subcontractor (installation company) is involved:

- Installation, maintenance and operation instructions
- Directive on attachment of supporting fitting components for turn-only and tilt&turn fittings (TBDK)
- Guidelines/advice on the product and on liability (VHBH)
- Guidelines/advice for end-users (VHBE)

They must ensure that the end users are provided with the documents and information intended for them in printed format.

Responsibility of building element dealers and the installation company

Building element dealers must pass the following documents on to the builder, even if a subcontractor (installation company) is involved:

- Installation, maintenance and operation instructions (with a focus on hardware)
- Guidelines/advice on the product and on liability (VHBH)
- Guidelines/advice for end-users (VHBE)

Responsibility of the builder

The builder must pass the following documents on to the end user:

- Installation, maintenance and operation instructions (with a focus on hardware)
- Guidelines/advice for end-users (VHBE)

1.9 Copyright protection

The contents of this document are copyright-protected. This content can be used when working with the hardware. Any other use is not permitted without written permission of the manufacturer.

1.10 Limitation of liability

All information and instructions contained in this document have been compiled in consideration of the applicable standards and regulations, the latest developments in technology and many years of knowledge and experience.

The hardware manufacturer assumes no liability for damage caused by:

- Failure to comply with this document and all product-specific documents and other applicable directives (see the chapters entitled “Security” and “Stipulated use”).
- Improper use / misuse (see the chapters entitled “Security” and “Stipulated use”).
- Insufficient invitation to tender, non-compliance with installation specifications and non-compliance with the application diagrams (where available).
- Increased contamination.

Claims made by third parties against the hardware manufacturer on account of damage resulting from misuse or failure to comply with the obligation to

give instructions on the part of hardware dealers, window, door and balcony door manufacturers and building element dealers or the builder are passed on accordingly.

The obligations agreed in the delivery contract, the general terms and conditions, the hardware manufacturer's terms and conditions of delivery and the legal provisions applicable when the contract was concluded shall apply.

The warranty only covers original Roto components.

We reserve the right to make technical changes as part of improvement to performance characteristics and further development.

1.11 Preserving the surface finish

ATTENTION

Surface treatments may cause property damage.

Surface treatments (e.g. painting and varnishing) on elements can damage components or prevent them from working properly.

- For masking, only use adhesive tape that does not damage the paint coats. Consult the manufacturer if in doubt.
- Protect components against direct contact with the surface treatment.
- Protect components against contamination.

ATTENTION

Using incorrect cleaning agents and sealing compounds may cause property damage.

Cleaning agents and sealing compounds may damage the surfaces of components and gaskets.

- Do not use aggressive or flammable liquids, acidic cleaners or abrasive cleaners.
- Only use mild, pH-neutral cleaning agents that have been diluted.
- Apply a thin protective film to the components, for example using a cloth soaked in oil.
- Avoid aggressive vapours (e.g. produced by formic acid, acetic acid, ammonia, amine compounds, ammonia compounds, aldehyde, carbolic acid, chlorine, tannic acid) around the element.
- Do not use any acetic acid-crosslinking or acid-crosslinking sealing compounds or those with the aforementioned constituents as both direct contact with the sealing compound and its fumes can corrode the surface of the components.

ATTENTION

Contamination may cause property damage.

Contamination prevents components working properly.

- Remove deposits and contamination caused by construction materials (e.g. plaster, gypsum).
- Keep components free of deposits and contaminants.

ATTENTION

(Permanently) damp room air may cause property damage.

Damp room air can lead to mould growth and corrosion caused by condensation.

- Provide adequate ventilation for components, particularly during the construction phase.
- Intensively air out the room several times per day by opening all elements for approximately 15 minutes. If intensive airing is not an option, place the elements in the tilt position and provide airtight masking inside the room, e.g. if there is fresh screed that cannot be walked on or must not be exposed to draughts. Discharge any humidity present in the room air to the outside using condensation dryers.
- Establish a ventilation plan for more complex construction projects if necessary.
- Provide adequate ventilation during holiday periods as well.

2 Security

This manual contains instructions relating to safety. The principal safety information in this chapter includes information and instructions relevant to the safe use or maintaining the safe condition of the product. Warning instructions that relate to handling warn of residual risks and are located before steps that are relevant to safety.

- Follow all of the instructions in order to prevent personal injury and property and environmental damage.

2.1 Presentation and structure of warning instructions

The warning instructions relate to individual actions and are structured as follows with a warning symbol:

DANGER

Nature and source of the danger.

Explanation and description of the danger and the implications.

- Measures to take to avert the danger.

2.2 Security levels of warning instructions

The warning instructions that relate to handling are identified differently according to the severity of the associated danger. The signal words and the associated warning symbols used are clarified below.

DANGER

Immediate risk of death or serious injuries.

- Observe these warning instructions to avoid personal injuries.

WARNING

Potential risk of death or serious injuries.

- Observe these warning instructions to avoid personal injuries.

CAUTION

Risk of injuries

- Observe these warning instructions to avoid personal injuries.

ATTENTION

Reference to property or environmental damage.

- Observe these warning instructions to avoid property or environmental damage.

2.3 Stipulated use

Turn-Only and Tilt&Turn hardware components are one-hand operation, Turn-Only and Tilt&Turn hardware components for windows and balcony doors in structural engineering. This hardware is used to move window sashes and balcony door sashes to a turned position by actuating a hand lever or a tilt position which is restricted by the scissor stay version. Turn-Only and Tilt&Turn hardware components may be used on vertically installed windows and balcony doors made of timber, PVC, aluminium or steel, or corresponding combinations of the aforementioned materials. Turn-Only and Tilt&Turn hardware components in the sense of this definition close windows and balcony door sashes or move them into various ventilation positions.

During the closing process, the gasket counter force must generally be overcome.

Stipulated use also includes compliance with all safety information and specifications contained in these instructions, the other applicable documents and the applicable regulations, directives and national laws.

2.3.1 Misuse

Any use and processing of the products that goes beyond or differs from the stipulated use is considered misuse and can lead to hazardous situations.

WARNING

Misuse may pose a risk of death!

Misuse and incorrect installation of hardware can lead to serious injuries.

- Only use hardware combinations that have been approved by the hardware manufacturer.
- Only use original accessories or those that have been approved by the hardware manufacturer.
- Note the product-related documentation → *from page 18*.

2.3.2 Usage restriction

Opened sashes in windows and balcony doors, and windows and balcony door sashes that are unlocked or placed in ventilation positions, only have a shielding effect. They do not meet the following requirements:

- Joint sealing
- Driving rain impermeability
- Sound insulation
- Thermal insulation
- Burglary inhibition

2.4 Stipulated use for end users

For windows or balcony doors with Turn-Only or Tilt&Turn hardware, windows or balcony door sashes can be moved to a turned position by operating a hand lever or to a tilt position restricted by the scissor stay version.

When closing a sash and locking the hardware, the gasket counter force must generally be overcome.

WARNING

Opening and closing sashes in an uncontrolled manner may pose a risk of death!

Opening and closing the sash in an uncontrolled manner may lead to serious injuries.

- Ensure that the sash does not collide with the frame, opening restrictor (buffer) or other sashes when it is moved into the fully open or closed position.
- Ensure that the sash is slowly guided by hand throughout its entire movement range, until it has been brought into a fully closed or opening position.

ATTENTION

Opening and closing sashes in an uncontrolled manner may result in property damage.

Opening and closing the sash in an uncontrolled manner may cause the element to malfunction.

- Ensure that the sash does not collide with the frame, opening restrictor (buffer) or other sashes when it is moved into the fully open or closed position.
- Ensure that the sash is slowly guided by hand throughout its entire movement range, until it has been brought into a fully closed or opening position.

Any use and processing of the products that goes beyond or differs from the stipulated use is considered misuse and can lead to hazardous situations.

No claims of any kind can be made on account of damage resulting from failure to comply with the stipulated use.

2.4.1 Misuse

Any use and processing of the products that goes beyond or differs from the stipulated use is considered misuse and can lead to hazardous situations.

WARNING

Misuse may pose a risk of death!

Misuse and incorrect installation of hardware can lead to serious injuries.

- Only use hardware combinations that have been approved by the hardware manufacturer.
- Only use original accessories or those that have been approved by the hardware manufacturer.
- Note the product-related documentation → *from page 18*.

2.5 Basic safety information

The following hazards may arise when handling the product:

2.5.1 Installation

Incorrect installation poses an immediate risk of death or serious injuries.

Incorrect installation or assembly of hardware can lead to hazardous situations or property damage. Depending on the height of the fall, this can result in serious to life-threatening injuries and glass breakage.

- Only use hardware combinations that have been approved by the hardware manufacturer.
- Only use original accessories or those that have been approved by the hardware manufacturer.
- Always have installation performed by a specialist company.

Heavy loads pose a risk of injury.

Lifting and carrying heavy loads may lead to injuries in the event of a fall or physical overexertion.

- Note the applicable accident prevention regulations.

- Transport heavy loads with two people and use suitable transportation means (such as an industrial truck).

Physical strain may cause damage to health.

Moving heavy loads for extended periods leads to physical injury in the long term.

- When carrying and lifting by hand, comply with a maximum weight of 25 kg for men and 10 kg for women.
- Carry and lift even small loads with an ergonomically correct posture.

2.5.2 Use

Falls from open windows and balcony doors present an immediate risk of death and pose the risk of serious injuries.

Opened sashes of windows and balcony doors create a danger zone. Depending on the height of the fall, this can result in serious to life-threatening injuries and glass breakage.

- Take care when in the vicinity of open windows and balcony doors.
- Keep children and anyone unable to understand the risks away from the hazardous area.

Trapping body parts in the opening between sash and frame may lead to serious injuries.

Gripping between the sash and frame when closing windows and balcony doors poses the risk of crushing injuries.

- When closing windows and balcony doors, never grip between the sash and frame and always exercise caution.
- Keep children and anyone unable to understand the risks away from the hazardous area.

Opening and closing sashes improperly poses the risk of injury and property damage.

Incorrect opening and closing of sashes can result in serious injuries and substantial property damage.

- When moving the sash, ensure that it will not slam against the frame or other sashes once fully opened or closed.
- Ensure that the sash is slowly guided by hand throughout its entire movement range, until it has been brought into a fully closed or opening position.
- When closing a sash and locking the hardware, the gasket counter force must be overcome.

Misuse poses a risk of injury and property damage.

Misuse can lead to hazardous situations and may destroy the hardware, frame materials or other individual components within the windows or balcony doors.

- Do not introduce any obstacles in the opening area between the frame and window or balcony door sashes.
- Do not place additional loads on windows and balcony door sashes.

- Refrain from intentionally or uncontrollably slamming or pushing the window or balcony door sash against the window reveal.

Improper maintenance poses the potential risk of injury and property damage.

Windows and balcony doors, including the hardware, require expert maintenance (care, cleaning, maintenance and inspection) in order to guarantee their proper condition and safe use.

- Keep the hardware free of deposits and contaminants.
- Carry out care and cleaning tasks as specified in these instructions.
- Always have regular maintenance, adjustment and repair work carried out by a specialist company.

2.5.3 Ambient conditions

Physical and chemical influences may result in property damage.

Hardware components can be permanently damaged to the point that they can no longer function in a saline, aggressive or corrosive environment.

- Do not use the hardware components in a saline, aggressive or corrosive environment.
- Carry out care and cleaning tasks as specified in these instructions.
- Corrosion protection must be inspected by an authorised specialist company as part of regular maintenance work.

Moisture may cause property damage.

Depending on the outside temperature, relative humidity of the room air and installation conditions for the windows and balcony doors, a temporary build-up of condensation may occur. This can lead to corrosion on the hardware and mould growth on the frame or wall. Ambient conditions that are too damp, particularly during the construction phase, can lead to timber elements warping.

- Avoid preventing the circulation of air (e.g. due to deep reveals, curtains and unfavourable positioning of heaters or the like).
- Intensively air out the room several times per day.

  Open all windows and balcony doors for approximately 15 minutes so that the air in the room can be completely replaced.
- Provide adequate ventilation during holiday periods as well.
- Create a ventilation plan for construction projects if necessary.

2.6 Operation

The safety symbols and markings and the associated warning instructions explained below apply to the safe operation of windows and balcony doors.

Safety symbols and markings

Symbol	Meaning
	**Falls from open windows and balcony doors present an immediate risk of death and pose the risk of serious injuries.** Take care when in the vicinity of open windows and balcony doors. Keep children and anyone unable to understand the risks away from the hazardous area.

Symbol	Meaning
	**Trapping body parts in the opening between sash and frame may lead to serious injuries.** When closing windows and balcony doors, never grip between the sash and frame and always exercise caution. Keep children and anyone unable to understand the risks away from the hazardous area.
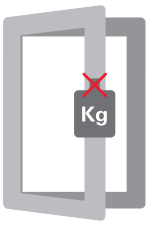	**Placing additional loads on the sash may lead to minor injuries and property damage.** Avoid placing additional loads on the sash.
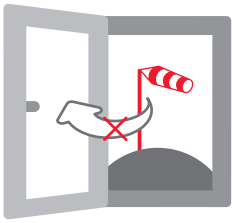	**The impact of wind may lead to minor injuries and property damage.** Avoid exposing the open sash to wind. Close and lock the window and balcony door sash in windy or draughty conditions.
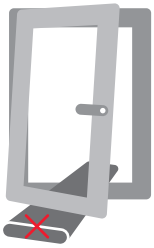	**Introducing obstacles into the opening between sash and frame may result in minor injuries and property damage.** Avoid introducing obstacles into the opening between sash and frame.
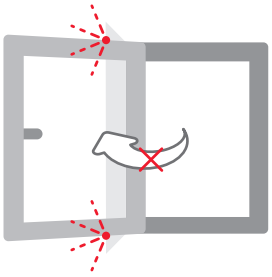	**Pressing the sash against the edge of an opening (reveal) may pose a risk of minor injuries and cause property damage** Refrain from pressing the sash against the edge of an opening (reveal).

3 Information on the product

3.1 General hardware characteristics

- Hinge side can be clamped in the frame groove using preassembled clamp strips.
- No visible screws.
- Roto standard colours and special colours are possible (does not apply to 200 kg and 300 kg).
- Preassembled sash stay with integrated anti-slam device.
- Centre locks can be placed at any position thanks to the insertable locking cams.
- Burglary inhibition up to RC 3 is possible (DIN EN 1627-1630).
- Corrosion resistance in accordance with DIN EN 1670: class 5 (480 +1 h).
- Hardware certified in accordance with QM 328.

Components

- Hinge classification in accordance with JG/T 125-2017: CJ-MZ 80 - III (CD hinge | 80 kg) and CJ-MZ 100 - III (CD hinge | 100 kg).
- Geared-handle (optionally lockable window handles 100 Nm)
- Geared-handle with separate service handle (handle without escutcheon)
- Flush-encased gearbox with / without malfunction lock (window handles optionally lockable 40 / 100 Nm)
- Handle without escutcheon for flush-encased gearbox (optionally lockable)
- Concealed floating-mullion hardware in the following variants:
  - Floating-mullion espagnolette, internal (FM)
  - Floating-mullion shootbolt (FM-Sh)
  - Floating-mullion espagnolette, surface-mounted (FM-Su)
  - Floating-mullion espagnolette, surface-mounted, narrow version (FM-SuN)
  - Floating-mullion espagnolette, slider (FM-R)
- Use of turn restrictor SW ≥ 1200 mm
- Use of turn restrictor (damped, braked) SW ≥ 1200 mm
- Turn lock with cylinder lock, lockable
- Night vent
- Bullet catch

Adjustment

- The gasket compression can be adjusted by eccentric cams.
- Lateral adjustment on the pivot rest when installed.
- T-O CD hinge: lateral adjustment of ±0.6 mm via bush adjustment.
- Tilt&Turn sash stay with integrated lateral adjustment when installed.
- Height adjustment in the corner hinge when installed (does not apply to 200 kg and 300 kg).

3.2 Application ranges

- Overlap width: 21.5 mm / 22 mm
- Rebate clearance: 11.5 - 12 mm
- Hinge passage: > 3.5 mm
- Hardware axis: 10 mm
- Frame groove: V.01 and V.02
- Operating range: -20 °C to +50 °C

3.3 Application diagrams

The following application diagrams show the minimum and maximum application ranges. The sash dimensions are dependent on a number of factors. This is why the applicable application ranges are found at the start of each hardware overview.

3.3.1 Tilt&Turn / TiltFirst hardware

3.3.1.1 90 kg

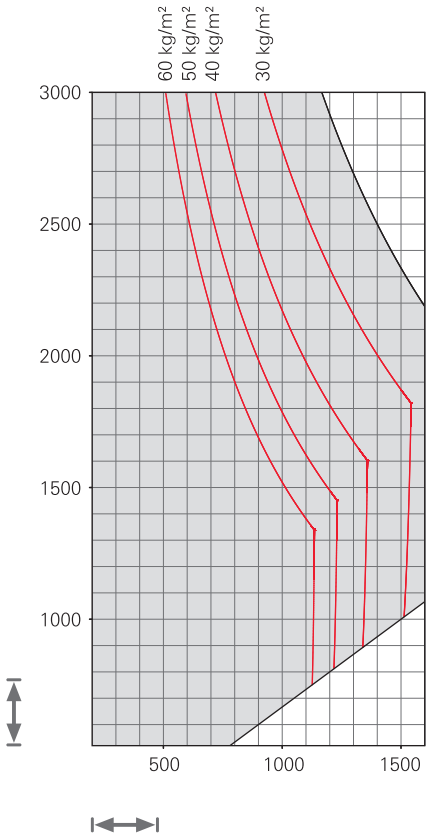

= Impermissible application range

Calculation basis for application diagram: IFT tool

Glass clearance dimension = 20 mm

(Sash) profile weight = 2 kg/m²

INFO

Lower glass clearance dimensions or higher profile weights require a separate assessment.

The specifications in the application diagram refer to the glass weight in kg/m².

1 mm/m² glass thickness ≙ 2.5 kg

Glass weight max. 60 kg/m²

			Application range
	Sash width	Sash stay 400	405 – 600 mm
		Sash stay 600	601 – 1300 mm
		Sash stay 600 + additional stay arm	1301 – 1600 mm
	Sash height	Pivot rest	520 – 2400 mm
		Pivot rest + additional screw	2401 – 2700 mm
		Corner hinge, reinforced + additional screw for pivot rest	2701 – 3000 mm
	Sash weight		Max. 90 kg

3.3.1.2 130 kg

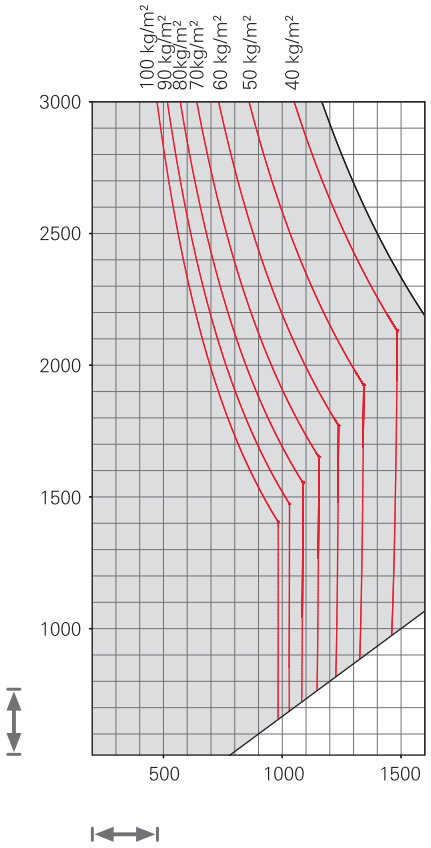

= Impermissible application range

Calculation basis for application diagram: IFT tool

Glass clearance dimension = 20 mm

(Sash) profile weight = 2 kg/m²

INFO
Lower glass clearance dimensions or higher profile weights require a separate assessment.

The specifications in the application diagram refer to the glass weight in kg/m².

1 mm/m² glass thickness ≙ 2.5 kg

Glass weight max. 100 kg/m²

			Application range
	Sash width	Sash stay 400 (sash weight max. 100 kg)	405 – 600 mm
		Sash stay 600	601 – 1300 mm
		Sash stay 600 + additional stay arm	1301 – 1600 mm
	Sash height	Pivot rest	520 – 2400 mm
		Pivot rest + additional screw	2401 – 2700 mm
		Corner hinge, reinforced + additional screw for pivot rest	2701 – 3000 mm
	Sash weight		Max. 130 kg

3.3.1.3 160 kg

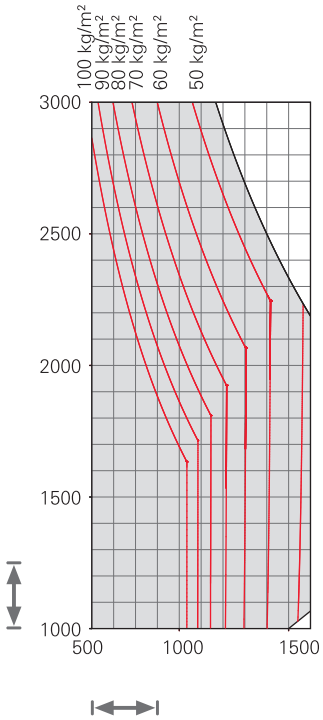

= Impermissible application range

Calculation basis for application diagram: IFT tool

Glass clearance dimension = 20 mm

(Sash) profile weight = 2 kg/m²

INFO
Lower glass clearance dimensions or higher profile weights require a separate assessment.

The specifications in the application diagram refer to the glass weight in kg/m².

1 mm/m² glass thickness ≙ 2.5 kg

Glass weight max. 100 kg/m²

			Application range
	Sash width	Sash stay 620	600 – 1300 mm
		Sash stay 620 + additional stay arm	1301 – 1600 mm
	Sash height		1000 – 3000 mm
	Sash weight		Max. 160 kg

3.3.1.4 200 kg

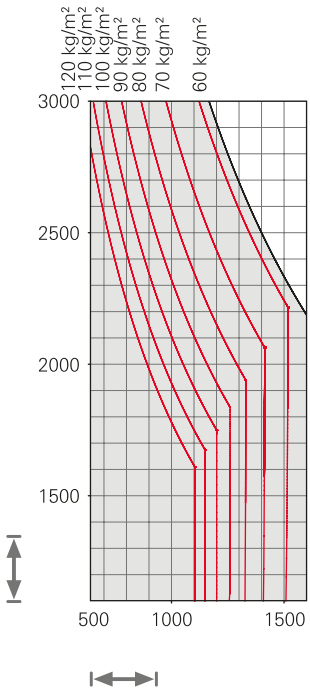

= Impermissible application range

Calculation basis for application diagram: IFT tool

Glass clearance dimension = 20 mm

(Sash) profile weight = 2 kg/m²

INFO
Lower glass clearance dimensions or higher profile weights require a separate assessment.

The specifications in the application diagram refer to the glass weight in kg/m².

1 mm/m² glass thickness ≙ 2.5 kg

Glass weight max. 120 kg/m²

			Application range
	Sash width	Sash stay 640 + additional stay arm + sash lifter	640 – 1600 mm
	Sash height		1100 – 3000 mm
	Sash weight		Max. 200 kg

3.3.2 Turn-Only hardware

3.3.2.1 50 kg

with CD hinge

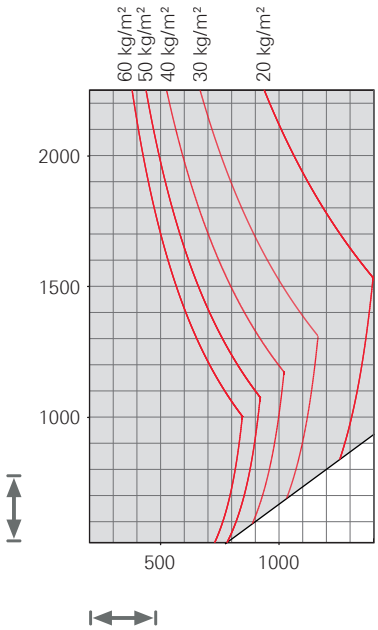

□□□ = Impermissible application range

Calculation basis for application diagram: IFT tool

Glass clearance dimension = 20 mm

(Sash) profile weight = 2 kg/m²

INFO

Lower glass clearance dimensions or higher profile weights require a separate assessment.

The specifications in the application diagram refer to the glass weight in kg/m².

1 mm/m² glass thickness ≙ 2.5 kg

Glass weight max. 60 kg/m²

		Application range
	Sash width	200[1] – 1400 mm
	Sash height	520 – 2250 mm
	Sash weight	Max. 50 kg

[1] It is necessary to create a turning curve on the basis of a profile assessment to produce small minimum sash widths.

3.3.2.2 80 kg

with CD hinge

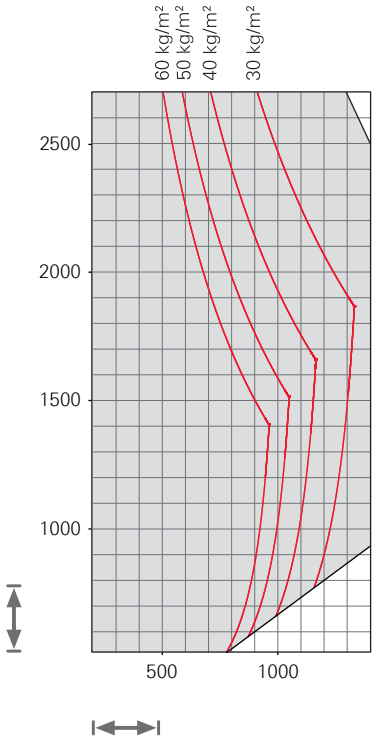

☐☐☐ = Impermissible application range

Calculation basis for application diagram: IFT tool

Glass clearance dimension = 20 mm

(Sash) profile weight = 2 kg/m²

INFO

Lower glass clearance dimensions or higher profile weights require a separate assessment.

The specifications in the application diagram refer to the glass weight in kg/m².

1 mm/m² glass thickness ≙ 2.5 kg

Glass weight max. 60 kg/m²

		Application range
	Sash width	200[2] – 1400 mm
	Sash height	520 – 2700 mm
	Sash weight	Max. 80 kg

[2] It is necessary to create a turning curve on the basis of a profile assessment to produce small minimum sash widths.

3.3.2.3 100 kg

with CD hinge

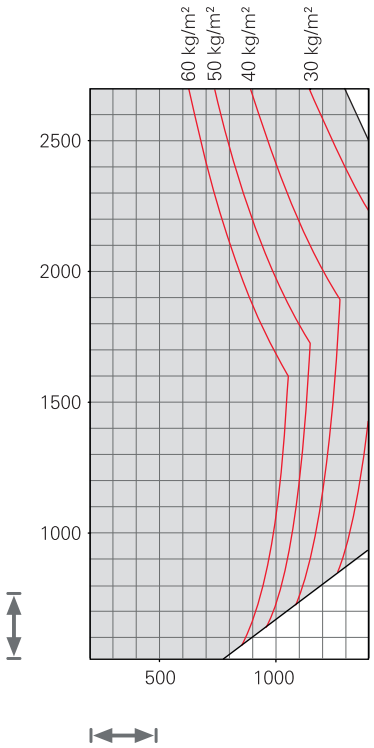

☐☐☐ = Impermissible application range

Calculation basis for application diagram: IFT tool

Glass clearance dimension = 20 mm

(Sash) profile weight = 2 kg/m²

INFO

Lower glass clearance dimensions or higher profile weights require a separate assessment.

The specifications in the application diagram refer to the glass weight in kg/m².

1 mm/m² glass thickness ≙ 2.5 kg

Glass weight max. 60 kg/m²

		Application range
	Sash width	200[3] – 1400 mm
	Sash height	520 – 2700 mm
	Sash weight	Max. 100 kg

[3] It is necessary to create a turning curve on the basis of a profile assessment to produce small minimum sash widths.

3.3.2.4 90 kg

with T-O, T-O-C hinge side

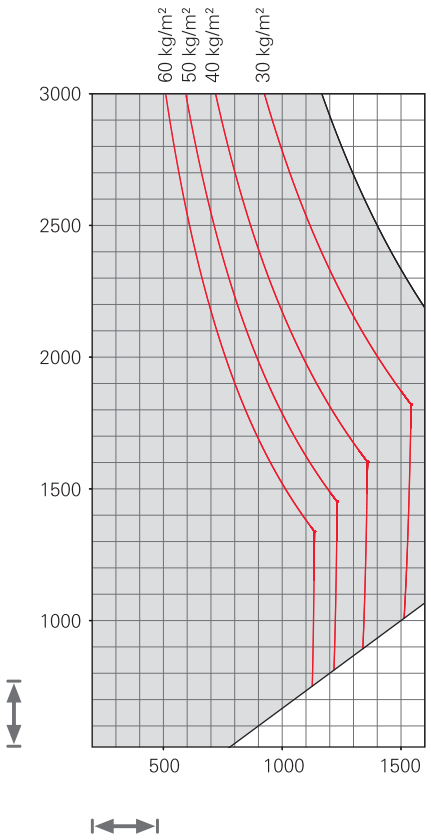

□□□ = Impermissible application range

Calculation basis for application diagram: IFT tool

Glass clearance dimension = 20 mm

(Sash) profile weight = 2 kg/m²

INFO
Lower glass clearance dimensions or higher profile weights require a separate assessment.

The specifications in the application diagram refer to the glass weight in kg/m².

1 mm/m² glass thickness ≙ 2.5 kg

Glass weight max. 60 kg/m²

			Application range
	Sash width	Turn-Only hinge	200 – 1600 mm
		Turn-Only stay hinge	
	Sash height	Pivot rest	520 – 2400 mm
		Pivot rest + additional screw	2401 – 2700 mm
		Corner hinge, reinforced + additional screw for pivot rest	2701 – 3000 mm
	Sash weight		Max. 90 kg

3.3.2.5 130 kg

with T-O, T-O-C hinge side

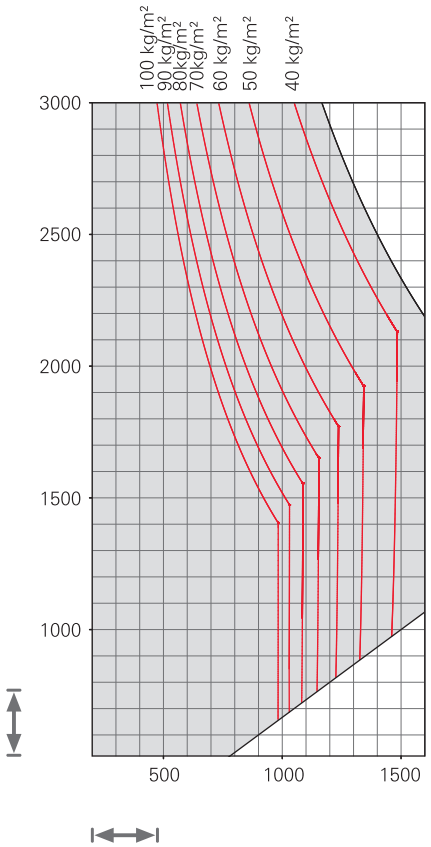

= Impermissible application range

Calculation basis for application diagram: IFT tool

Glass clearance dimension = 20 mm

(Sash) profile weight = 2 kg/m²

INFO
Lower glass clearance dimensions or higher profile weights require a separate assessment.

The specifications in the application diagram refer to the glass weight in kg/m².

1 mm/m² glass thickness ≙ 2.5 kg

Glass weight max. 100 kg/m²

			Application range
	Sash width	Turn-Only hinge	200 – 1600 mm
		Turn-Only stay hinge	
	Sash height	Pivot rest	520 – 2400 mm
		Pivot rest + additional screw	2401 – 2700 mm
		Corner hinge, reinforced + additional screw for pivot rest	2701 – 3000 mm
	Sash weight		Max. 130 kg (> 90 kg: T-O bearing + additional screw)

3.3.2.6 160 kg

with T-O-C hinge side

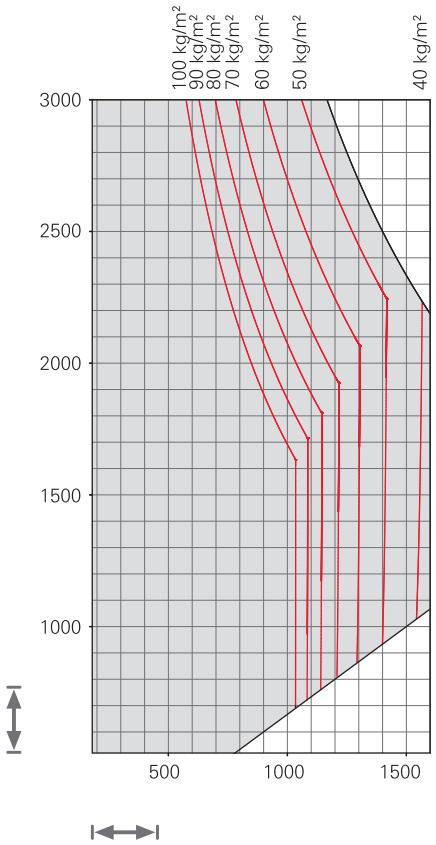

= Impermissible application range

Calculation basis for application diagram: IFT tool

Glass clearance dimension = 20 mm

(Sash) profile weight = 2 kg/m²

INFO
Lower glass clearance dimensions or higher profile weights require a separate assessment.

The specifications in the application diagram refer to the glass weight in kg/m².

1 mm/m² glass thickness ≙ 2.5 kg

Glass weight max. 100 kg/m²

		Application range
	Sash width	200 – 1600 mm
	Sash height	520 – 3000 mm
	Sash weight	Max. 160 kg

3.3.2.7 200 kg

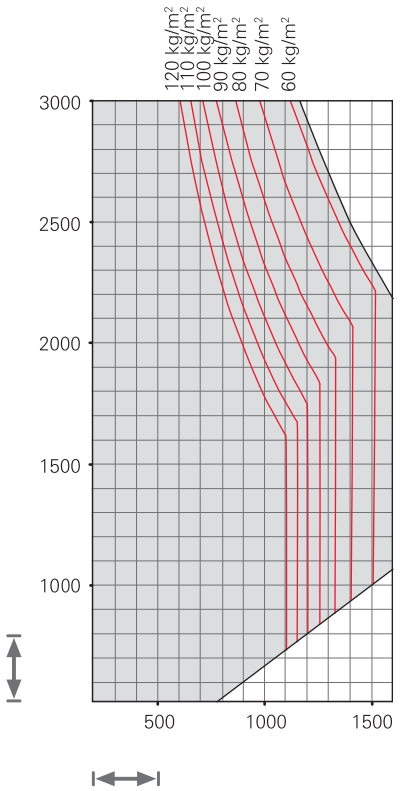

☐☐☐ = Impermissible application range

Calculation basis for application diagram: IFT tool

Glass clearance dimension = 20 mm

(Sash) profile weight = 2 kg/m²

INFO
Lower glass clearance dimensions or higher profile weights require a separate assessment.

The specifications in the application diagram refer to the glass weight in kg/m².

1 mm/m² glass thickness ≙ 2.5 kg

Glass weight max. 120 kg/m²

				Application range
	Sash width	T-O	T-O hinge	200 – 1300 mm
			T-O hinge + sash lifter	1301 – 1600 mm
	Sash height			520 – 3000 mm
	Sash weight			Max. 200 kg

3.3.2.8 300 kg

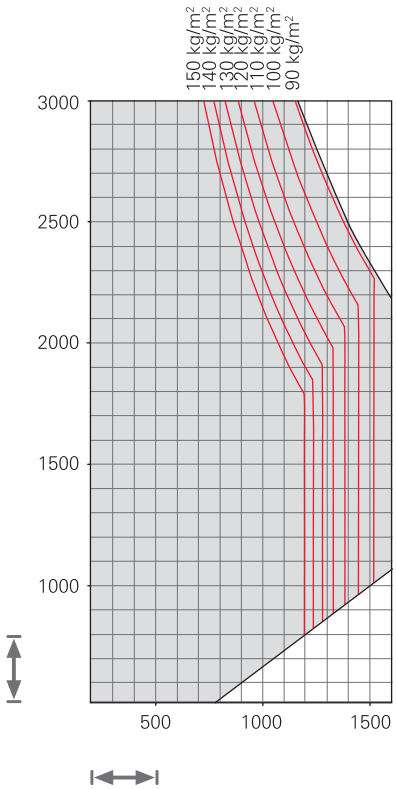

☐☐☐ = Impermissible application range

Calculation basis for application diagram: IFT tool

Glass clearance dimension = 20 mm

(Sash) profile weight = 2 kg/m²

INFO
Lower glass clearance dimensions or higher profile weights require a separate assessment.

The specifications in the application diagram refer to the glass weight in kg/m².

1 mm/m² glass thickness ≙ 2.5 kg

Glass weight max. 150 kg/m²

				Application range
	Sash width	T-O	T-O hinge	200 – 1300 mm
			T-O hinge + sash lifter	1301 – 1600 mm
	Sash height			520 – 3000 mm
	Sash weight			Max. 300 kg

3.3.3 Tilt-Only hardware

3.3.3.1 130 kg

TiSt – handle at the top

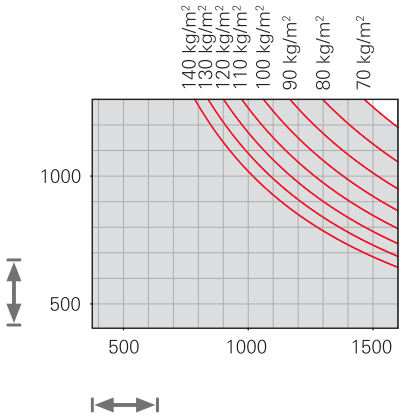

Calculation basis for application diagram: IFT tool

Glass clearance dimension = 20 mm

(Sash) profile weight = 2 kg/m²

INFO
Lower glass clearance dimensions or higher profile weights require a separate assessment.

The specifications in the application diagram refer to the glass weight in kg/m².

1 mm/m² glass thickness ≙ 2.5 kg

Glass weight max. 140 kg/m²

		Application range
	Sash width	375 – 1600 mm
	Sash height	450 – 1300 mm
	Sash weight	Max. 130 kg

3.3.3.2 200 kg

TiSt – handle at the top

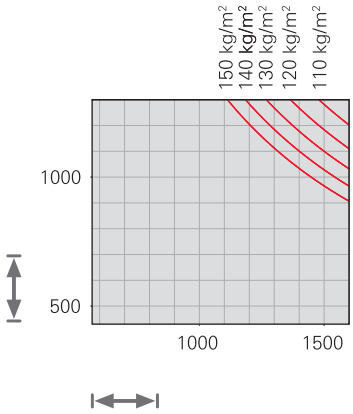

Calculation basis for application diagram: IFT tool

Glass clearance dimension = 20 mm

(Sash) profile weight = 2 kg/m²

INFO
Lower glass clearance dimensions or higher profile weights require a separate assessment.

The specifications in the application diagram refer to the glass weight in kg/m².

1 mm/m² glass thickness ≙ 2.5 kg

Glass weight max. 150 kg/m²

		Application range
	Sash width	520 – 1600 mm
	Sash height	450 – 1300 mm
	Sash weight	Max. 200 kg

3.3.3.3 130 kg

TiSs – handle at the side

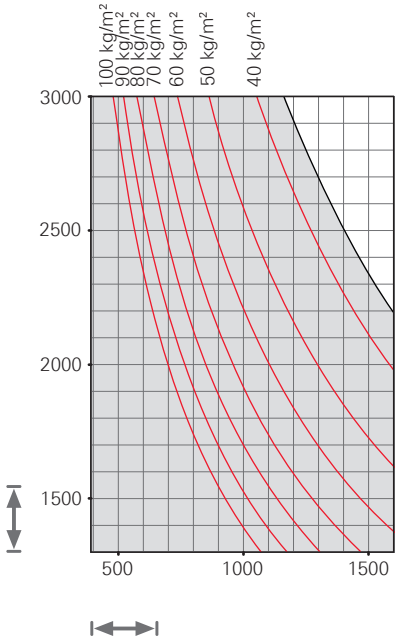

Calculation basis for application diagram: IFT tool

Glass clearance dimension = 20 mm

(Sash) profile weight = 2 kg/m²

INFO
Lower glass clearance dimensions or higher profile weights require a separate assessment.

The specifications in the application diagram refer to the glass weight in kg/m².

1 mm/m² glass thickness ≙ 2.5 kg

Glass weight max. 100 kg/m²

		Application range
	Sash width	390 – 1600 mm
	Sash height	1200 – 3000 mm
	Sash weight	Max. 130 kg

3.3.3.4 200 kg

TiSs – handle at the side

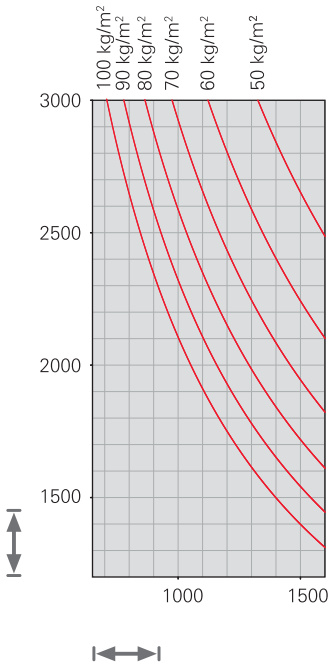

Calculation basis for application diagram: IFT tool

Glass clearance dimension = 20 mm

(Sash) profile weight = 2 kg/m²

INFO
Lower glass clearance dimensions or higher profile weights require a separate assessment.

The specifications in the application diagram refer to the glass weight in kg/m².

1 mm/m² glass thickness ≙ 2.5 kg

Glass weight max. 100 kg/m²

Application range		
	Sash width	650 – 1600 mm
	Sash height	1300 – 3000 mm
	Sash weight	Max. 200 kg

3.4 Minimum sash widths and heights

Sash dimensions – standard

	Max. weight	Min. SW				Max. SW	Min. SH	Max. SH	HH
		Without TR	br. TR	TR size 1	TR size 2				
T&T									
Sash stay 400	100 kg	405	490	475	–	600	520	3000	> 260
Sash stay 600****	130 kg	601	601	571	620	1600	520		
Sash stay 620****	160 kg	600	695	680	825	1600	1000		
Sash stay 640	200 kg	640	695	680	825	1600	1100		
TF									
Sash stay 400	100 kg	405	600	585	–	600	520	3000	> 260
Sash stay 600	130 kg	601	601	585	730	1600	520		
Sash stay 620	160 kg	600	675	660	805	1600	1000		
Sash stay 640	200 kg	640	675	660	805	1600	1100		
T-O									
CD hinge	50 kg	200	–	–	–	1400	520	2250	> 260
CD hinge	80 kg	200	–	–	–	1400		2700	
CD hinge	100 kg	200	–	–	–	1400		2700	
Sash stay 400 – tilting disabled	130 kg	405	490	475	620	1600		2700	
T-O hinge****	130 kg	200	490	480	625	1600		3000	
Turn-Only stay hinge	130 kg	200	490	480	625	1600		3000	
Turn-Only stay hinge	160 kg	200	505	***	***	1600		3000	
Turn-Only hinge	200 kg	200	505	***	***	1600		3000	
Turn-Only hinge	300 kg	200	505	***	***	1600		3000	
TiSt									
T-O hinge	130 kg	375	–	–	–	1600	450	1300	SW / 2
T-O hinge	200 kg	520	–	–	–	1600	450		
TiSs									
T-O hinge	130 kg	390	–	–	–	1600	1200	3000	SH / 2
T-O hinge	200 kg	650	–	–	–	1600	1300		
Floating-mullion hardware (second opening sash)									
T-O sash stay 400 – tilting disabled	130 kg	605	605	725	800	1600	520	2700	> 279
T-O sash stay 620 – tilting disabled	160 kg	770	770	770	770	1600	520	3000	

Sash dimensions – RC 2

	Max. weight	Min. SW				Max. SW	Min. SH	Max. SH	HH
		Without TR	br. TR	TR size 1	TR size 2				
T&T									
Sash stay 400	100 kg	525	–	–	–	600[4]	770	3000	SH / 2
Sash stay 600	130 kg	685	735*	720*	865*	1600	770		
Sash stay 620****	160 kg	680	850*	835*	980*	1600	1000		
Sash stay 640	200 kg	730	850*	835*	980*	1600	1100		
TF									
Sash stay 400	100 kg	530	–	–	–	600	770	3000	SH / 2
Sash stay 600	130 kg	625	750*	735*	880*	1600	770		
Sash stay 620	160 kg	680	850*	835*	980*	1600	1000		
Sash stay 640	200 kg	730	850*	835*	980*	1600	1100		
T-O									
Sash stay 400 – tilting disabled	130 kg	525	735*	720*	865*	1600	520	2700	SH / 2
T-O hinge	130 kg	515	750*	735*	880*	1600	770	3000	
Turn-Only stay hinge	130 kg	515	750*	735*	880*				
TiSt									
T-O hinge	130 kg	575	–	–	–	1600	520	1300	SW / 2
TiSs									
T-O hinge	130 kg	545	–	–	–	1600	1200	3000	SH / 2
Floating-mullion hardware (second opening sash)									

[4] SW max. 900 mm possible with special approval.

	Max. weight	Min. SW				Max. SW	Min. SH	Max. SH	HH
		Without TR	br. TR	TR size 1	TR size 2				
T-O sash stay 400 – tilting disabled	130 kg	725	790	775	920	1600	1020	2700	SH / 2
T-O sash stay 620 – tilting disabled	160 kg	890	890	890	935	1600	1020	3000	

Sash dimensions – RC 3

	Max. weight	Min. SW				Max. SW	Min. SH	Max. SH	HH
		Without TR	br. TR	TR size 1	TR size 2				
T&T									
Sash stay 600	130 kg	770*	925*	910*	1020*	1600	920	3000	SH / 2
Sash stay 620	160 kg	755*	1040**	1025**	1170**	1600	1000		
Sash stay 640	200 kg	815*	1040**	1025**	1170**	1600	1100		
TF									
Sash stay 600	130 kg	770*	940*	925*	1070*	1600	920	3000	SH / 2
Sash stay 620	160 kg	755*	1040*	1025*	1170*	1600	1000		
Sash stay 640	200 kg	815*	1040*	1025*	1170*	1600	1100		
T-O									
Sash stay 400 – tilting disabled	130 kg	680	925	910	1055	1600	520	2700	SH / 2
T-O hinge	130 kg	665	940	925	1070	1600	920	3000	
Turn-Only stay hinge	130 kg	665	940	925	1070				
TiSt									
T-O hinge	130 kg	845	–	–	–	1600	520	1300	SW / 2
TiSs									
T-O hinge	130 kg	845	–	–	–	1600	1200	3000	SH / 2
Floating-mullion hardware (second opening sash)									
T-O sash stay 400 – tilting disabled	130 kg	800	940	925	1070	1600	1170	2700	SH / 2
T-O sash stay 620 – tilting disabled	160 kg	1140	1140	1140	1140	1600	1170	3000	

– Not permissible / not possible

* Dimension that enables all security strikers to be positioned according to the specifications in the installation drawings.

** To produce smaller sash widths for applications to offer protection against burglary, there is the option to adapt the recommended positions in the installation drawings for the security strikers used (RC strikers) and the associated connecting rod deduction dimension.

*** Use possible upon request.

**** Accessible: for the applicable application ranges, see the hardware overview. A turn restrictor may only be used if separate testing is carried out.

INFO
Depending on the profile stability, the test can also be passed with fewer security locking points, and the structure can therefore have a smaller design.

3.5 Profile cross sections

INFO
The following cross sections are neutral, schematic profile cross sections.

The hardware components listed in the table are profile-related and represent a selection from the Roto AL product range for profiles with a 15 / 20 mm sash groove. Further hardware component solutions (e.g. for different groove widths) can be supplied upon request.

Request assistance from Roto with the generally recommended profile assessments from the Roto sales representative in charge of this.

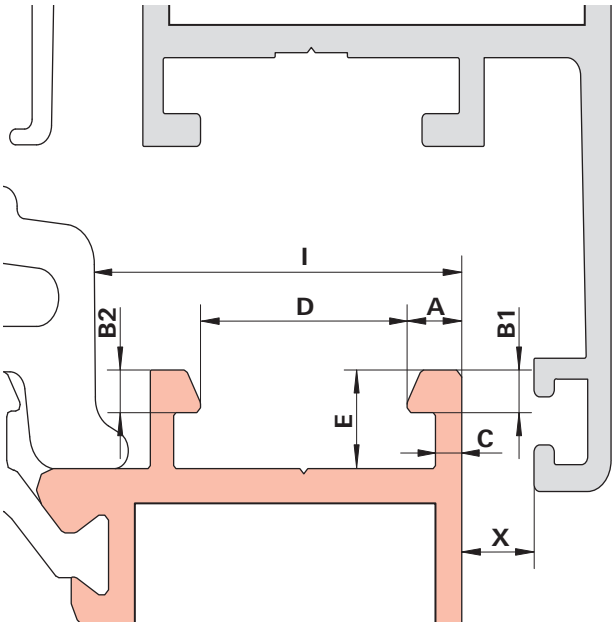

Assignment	Meaning	Min.	Max.
[A]	Flange width, front	3.50	4.50
[B1]	Flange thickness, front	1.50	2.00
[B2]	Flange thickness, rear	1.50	2.00
[C]	Profile leg thickness, front	1.70	2.00
[D]	Groove width	10.00	14.00
[E]	Groove depth	4.50	5.00
[I]	Installation space (frame)	22.00	–
[X]	Hinge passage	3.50	–

Groove versions

When ordering profile-related frame components, the descriptions V.01 and V.02 must be noted (see also → *from page 51*).

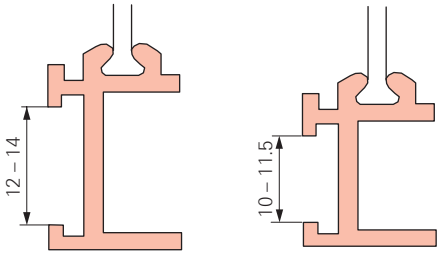

V.01 V.02

INFO
With groove versions from 11.6 mm to 11.9 mm, a profile assessment must be carried out and the components on the frame side must undergo demo assembly.

AL clamp strip selection

Take into account the flange thickness and the difference between the flange thickness and profile leg thickness in order to choose between clamping strips 1-3.

	Flange width [A] – profile leg thickness [C]														
Flange thickness [B]	**1.2**	**1.3**	**1.4**	**1.5**	**1.6**	**1.7**	**1.8**	**1.9**	**2.0**	**2.1**	**2.2**	**2.3**	**2.4**	**2.5**	**2.6**
1.5	-	1	1	1	1	1	1	1	1	1	1	1	1	1	1
1.6	1	1	1	1	1	1	1	1	1	1	1	1	1	1	2
1.7	1	1	1	1	1	1	1	1	1	1	2	2	2	2	2
1.8	2	2	2	2	2	2	2	2	2	2	2	2	2	2	2
1.9	2	2	2	2	2	2	2	2	2	2	2	2	2	2	2
2.0	2	2	2	2	2	2	2	2	2	2	2	2	2	2	2
2.1	2	2	2	2	3	3	3	3	3	3	3	3	3	3	3
2.2	-	2	3	3	3	3	3	3	3	3	3	3	3	3	3
2.3	-	3	3	3	3	3	3	3	3	3	3	3	3	3	3
2.4	3	3	3	3	3	3	3	3	3	3	3	3	3	3	3
2.5	3	3	3	3	3	3	3	3	3	3	3	3	3	3	3

Descriptions on the sash and frame profile

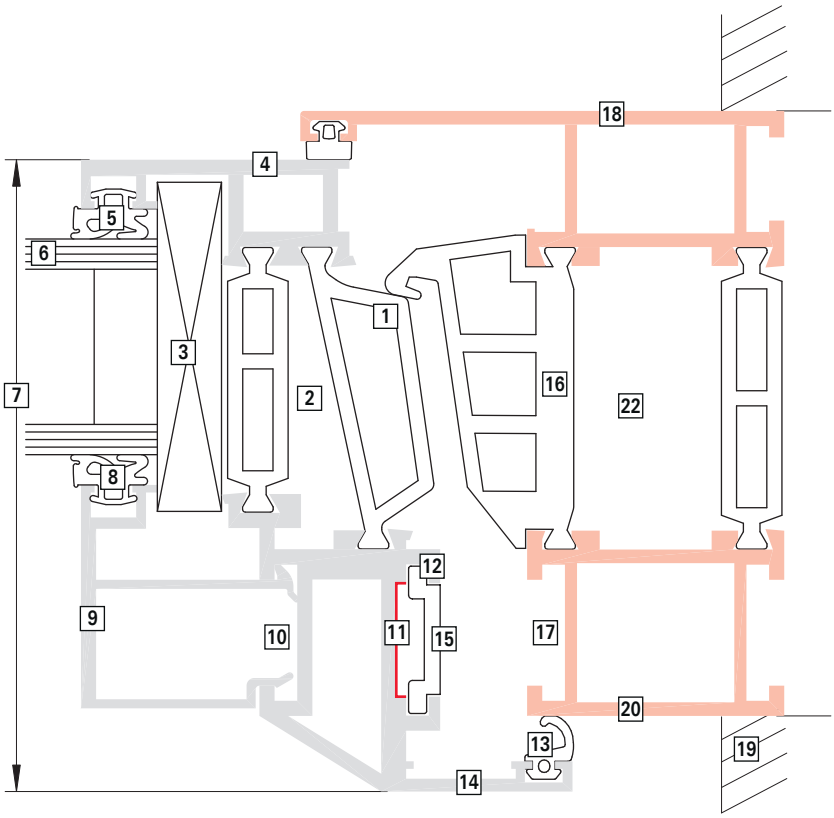

Assignment	Meaning	Assignment	Meaning
[1]	Central gasket stop strut	[12]	Connecting rod groove
[2]	Thermal separation	[13]	Overlap gasket
[3]	Spacer blocking	[14]	Inside shell (sash)
[4]	Outer shell (sash)	[15]	Connecting rod
[5]	Glazing gasket, external	[16]	Central gasket
[6]	Glazing (laminated glass)	[17]	Frame clamping groove for hardware components (frame glazing bead groove)
[7]	Sash profile – depth	[18]	Outer shell (frame)
[8]	Glazing gasket, internal	[19]	Internal reveal
[9]	Glazing bead	[20]	Inside shell (frame)
[10]	Sash glazing bead groove	[21]	Frame profile – depth
[11]	Extended connecting rod groove (ECC-groove)	[22]	Thermal separation

Dimensions

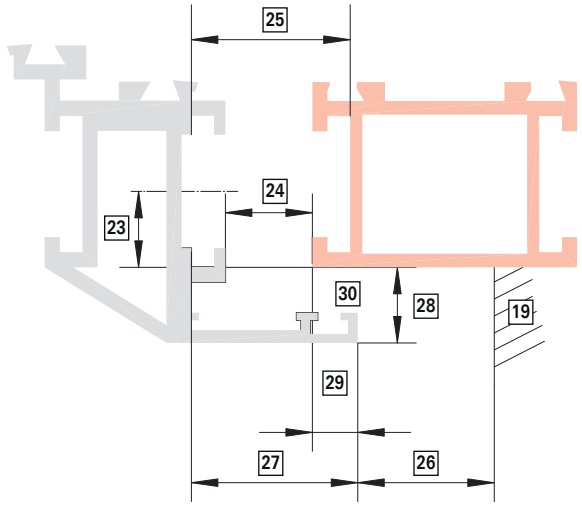

Assignment	Meaning
[23]	Hardware axis
[24]	Rebate clearance
[25]	Chamber dimension (hardware)
[26]	Frame clearance
[27]	Overlap width
[28]	Overlap height (including gasket)
[29]	Overlap coverage
[30]	Hinge passage

3.6 Space requirement for hardware

Please consult us in the event of deviating dimensions.

Single-sashed

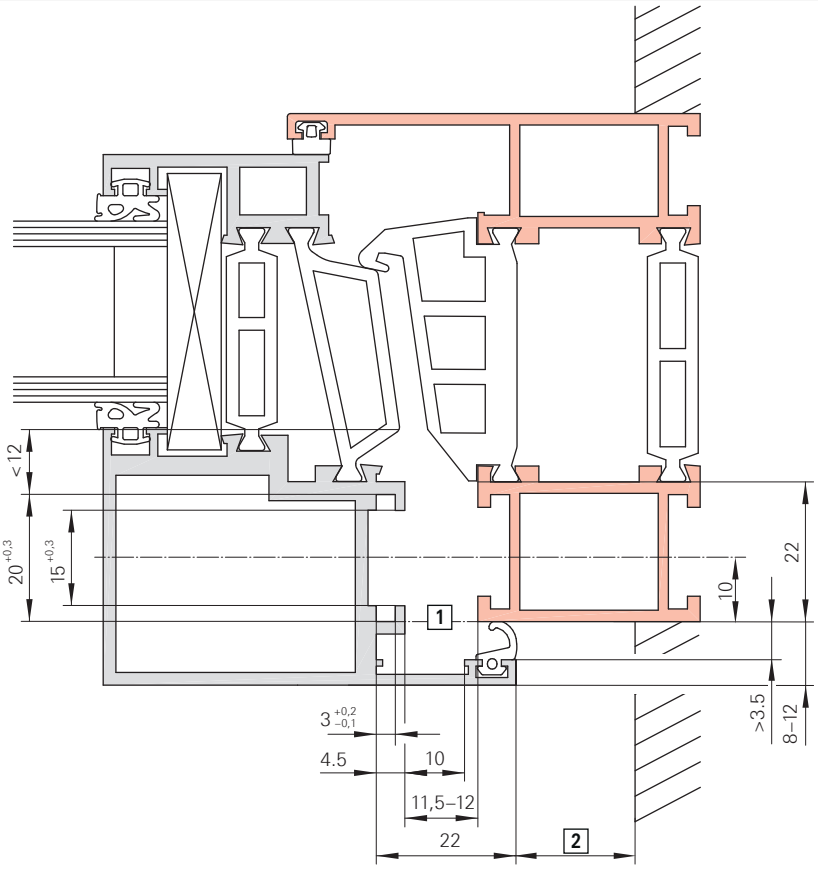

Opening type	Weight	[2]
T&T / TF	90 kg	16.2
	130 kg	16.2
	160 kg	16.2
	200 kg	19.5
T-O-CD	50 kg	14.0
	80 kg	16.0
	100 kg	18.0
T-O-C	160 kg	16.2
T-O	90 kg	16.2
	130 kg	16.2
	200 kg	16.2
	300 kg	19.5

[1] Pay attention to the alignment of the sash and frame.
[2] Frame clearance

INFO

All connecting rod dimensions refer to an overlap width of 22 mm.

If the overlap width differs from this, adapt the connecting rod dimensions accordingly.

All connecting rod dimensions T ±0.5 mm.

Two-sashed without fixed mullion – FM espagnolette type

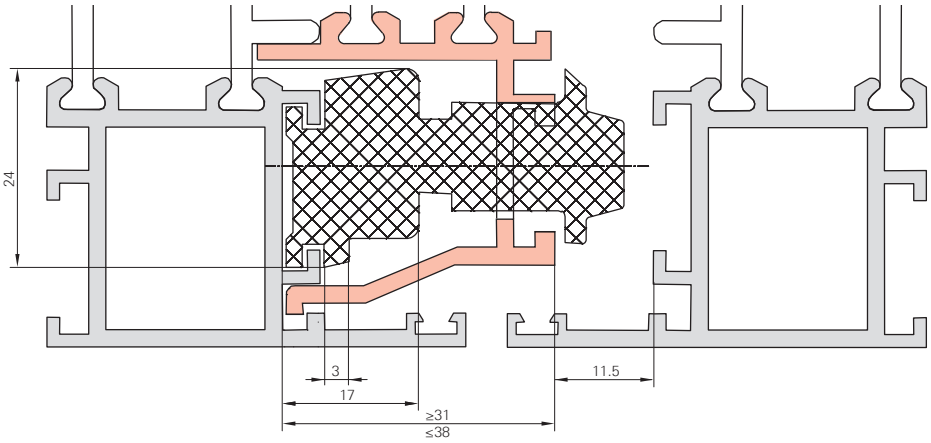

Two-sashed without fixed mullion – FM-Su, FM-SuN, FM-R, FM-Sh espagnolette type

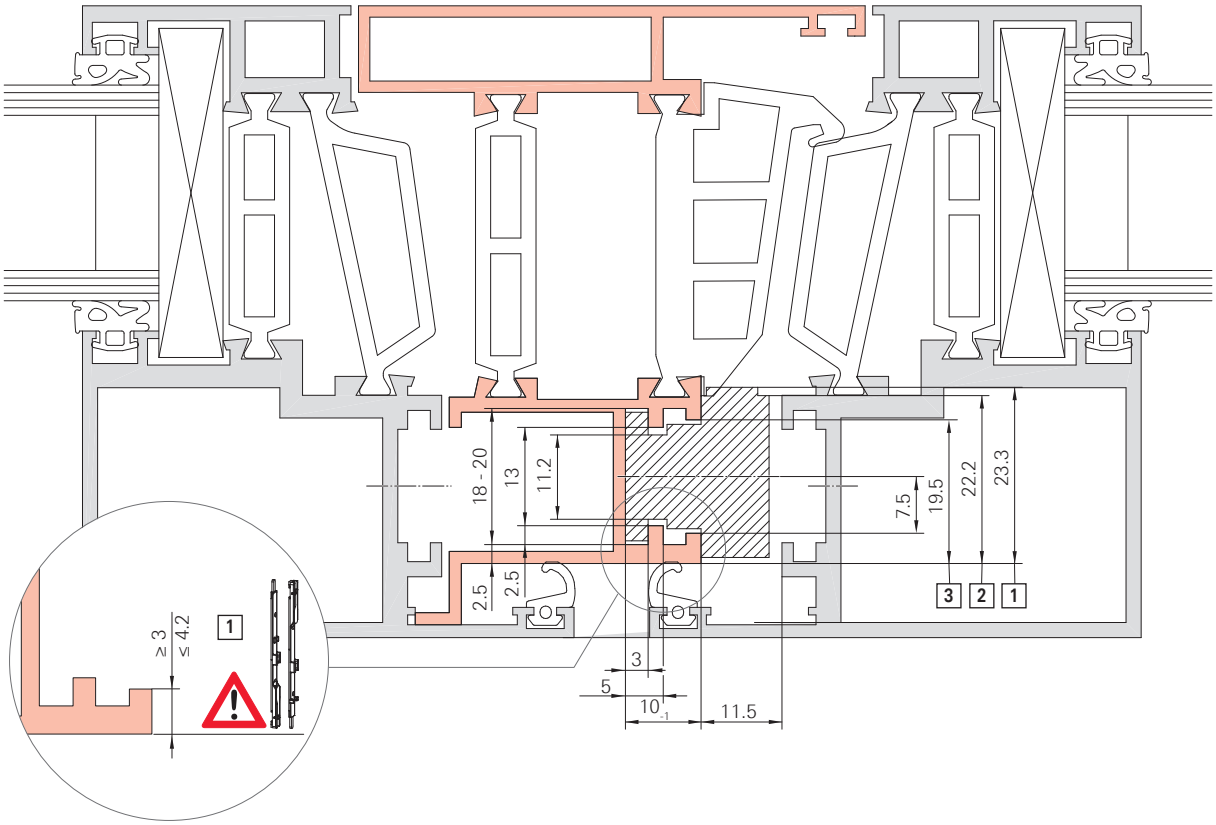

[1] Space requirement for FM-Sh

Note the additional information on the profile leg width (see detail drawing).

[2] Space requirement for FM-Su

[3] Space requirement for FM-R

4 Hardware overviews

The hardware overviews on the following pages are a recommendation on the part of Roto Frank Fenster- und Türtechnologie GmbH.

The basic page layout in the hardware overviews chapter firstly shows examples of the combination of individual hardware components, and the associated parts list can be seen on the following pages.

In the parts list, the parts that have to be ordered have a dark-grey background.

The required order quantity for an element can be found next to the shopping trolley symbol .

The packaging unit is in front of the material number. The minimum packaging quantity is ten units. Larger packaging units (e.g. 50 units) can be found under individual parts and accessories.

The item numbers in the squares link the hardware overview to the parts list.

Shown: DIN L version; size- and weight-dependent components are greyed out.

When installing a turn restrictor, note the changed minimum sash widths → *from page 50*.

The actual composition of the hardware depends on:

- The height of the element
- The width of the element
- The weight of the element
- Security class

INFO

Security classes

- The RC 2 and RC 3 security classes refer to the entire system.
- The hardware complies with the corresponding security classes in the required system tests.
- However, the security classes are only complied with if all of the other components in the system (e.g. profile system, reinforcement, glass, etc.) are also designed for this.

Recommended handles can be found in the handles catalogue.

Determine the quantity of required hardware components with Roto Con Orders.

INFO

Roto Con Orders

Efficient online hardware configurator for the custom configuration of individual window and door hardware components. All conventional shapes and opening types can be automatically configured quickly and easily. Individual parts lists, including application ranges and an exemplary hardware overview, can be ordered from your responsible sales representative.

www.roto-frank.com

4.1 Tilt&Turn hardware

4.1.1 T&T | 90 - 130 kg

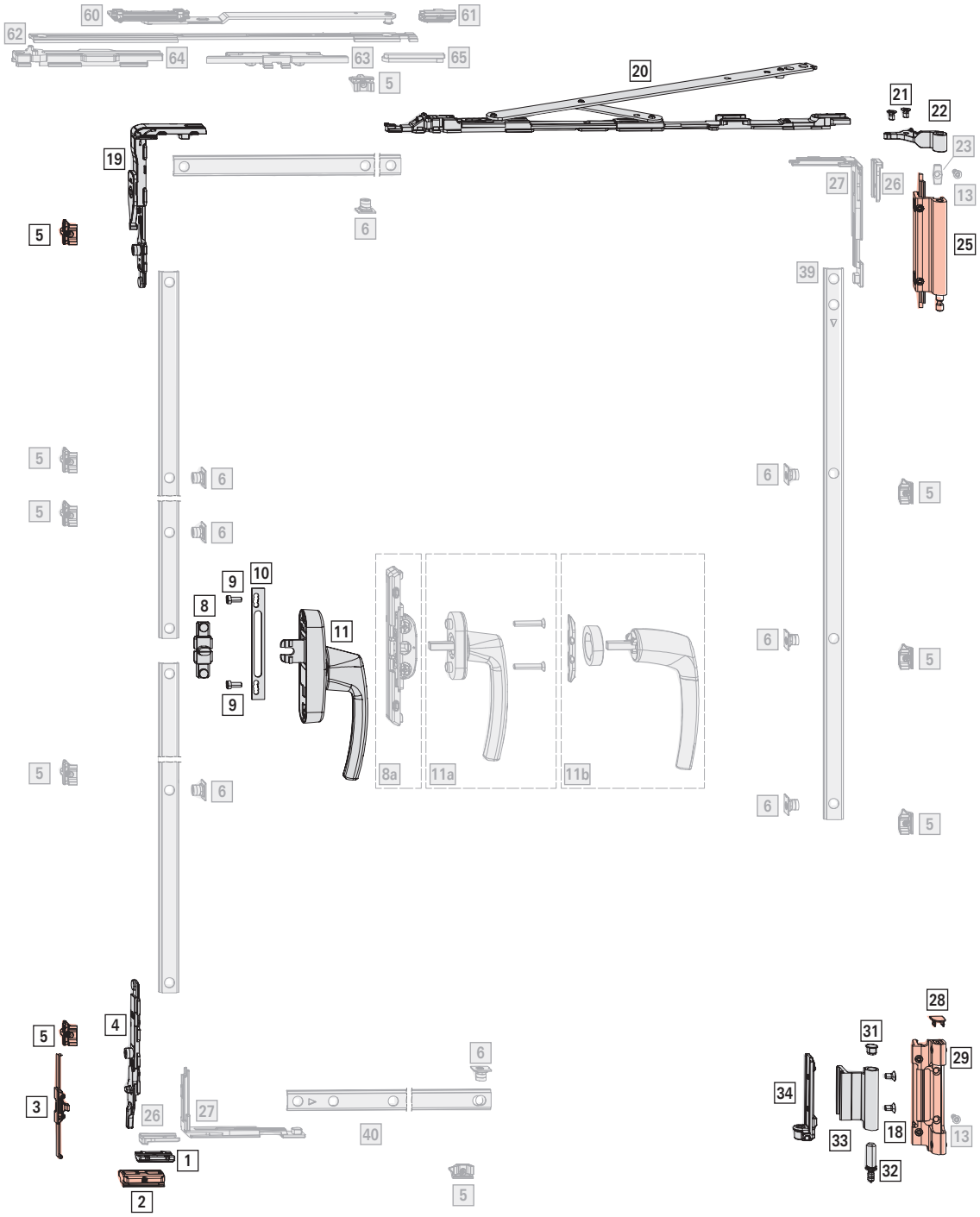

Application range

Sash width **SW**: 405 - 1600 mm

Sash height **SH**: 520 - 3000 mm

Sash weight **S.kg**: max. 130 kg

Hinge passage **HP**: > 3.5 / > 5 mm

Basic set

[*] T&T / TF hinge side set | 90 kg; 1
SH ≤ 2700 mm; HP 3.5 mm
Large packages → *from page 257*

				№
Clamp strip version 1	R01.5	Silver	20 Piece(s)	728787
	R05.4	Dark bronze	10 Piece(s)	728788
	R06.2	Jet black	10 Piece(s)	728789
	R07.2	Traffic white	10 Piece(s)	728790
	SF	Special colour	10 Piece(s)	728791
Clamp strip version 2	R01.5	Silver	10 Piece(s)	728792
	R05.4	Dark bronze	10 Piece(s)	728793
	R06.2	Jet black	10 Piece(s)	728794
	R07.2	Traffic white	10 Piece(s)	728795
	SF	Special colour	10 Piece(s)	728796
Clamp strip version 3	SF	Special colour	10 Piece(s)	728797

Contents:

[*]		#
[18]	Countersunk screw M5 x 9	2
[21]	Countersunk screw M5 x 8	2
[22]	Stay hinge, compl.	1
[25]	Stay bearing, compl.	1
[28]	Pivot rest end cap	1
[29]	Pivot rest, compl.	1
[31]	Corner hinge end cap	1
[32]	Pivot-rest pin	1
[33]	Corner hinge	1
[34]	Clampable corner bracket, compl.	1

INFO
Only use bearings / clamp strips which have been approved for the profile. Information can be obtained from Roto sales representatives.

[*] T&T / TF hinge side set | 90 kg; 1
SH > 2700 mm, HP 5 mm
Using the rivet nut set → *from page 288*

					№
Clamp strip version 1	SF	Special colour	20 Piece(s)	Left	834400
	SF	Special colour	20 Piece(s)	Right	834399
Clamp strip version 2	SF	Special colour	20 Piece(s)	Left	834156
	SF	Special colour	20 Piece(s)	Right	834155

Contents:

[*]		#
[22]	Stay hinge, compl.	1
[25]	Stay bearing, compl.	1
[28]	Pivot rest end cap	1
[29]	Pivot rest, compl.	1
[31]	Corner hinge end cap	1
	Corner hinge, reinforced	1
	Small parts set	1

[*] T&T locking components set 1
Large packages → *from page 257*

		№
V.01	10 Piece(s)	728804
V.02	10 Piece(s)	728805

Contents:

[*]		#
[1]	Run-up block	1
[2]	Tilt striker	1
[3]	Anti-jemmy device V.01 / V.02	1
[4]	Tilt lock bolt	1
[5]	Striker V.01 / V.02	2
[19]	Corner drive with blocking device and retaining fork	1

[20] Sash stay 1

				№
400	max. 100 kg	160	10 Piece(s)	728785
600	max. 130 kg	160	10 Piece(s)	728786

≤ 600	400
> 600	600

Espagnolette and connector

[*] T connector set 1
Alternatively:
[8a] Flush-encased gearbox 1 → *from page 272*

		№
AL T connector set	10 Piece(s)	728981

Contents:

[*]		
[8]	T connector	1
[9]	Cylinder screw M5 x 12	2

[10] Espagnolette support 1

			№
Espagnolette support	For Roto Line AL geared-handle	100 Piece(s)	331937

[11]	**Roto Line AL geared-handle**	1	→ CTL_1
	Alternatively:		
[a]	Window handle – standard	1	→ CTL_1
	Countersunk screw M5 x 30	2	
[b]	Handle without escutcheon	1	→ CTL_1
	Ring for handle without escutcheon	1	
	Mounting plate	1	

Height-dependent components

[*] CL corner drive set
Large packages → *from page 257*

		Nº
V.01	20 Piece(s)	728842
V.02	20 Piece(s)	728843

Contents:

[*]		#
[5]	Striker V.01 / V.02	2
[6]	Cam, insertable	2
[26]	Retaining fork	1
[27]	CL corner drive	1

≤ 1300	–
> 1300	1

[5] Striker

			Nº
V.01	9	100 Piece(s)	728918
V.02	9	100 Piece(s)	728920

≤ 1800	–
1801 – 2400	2
> 2400	4

[6] Cam, insertable

		Nº
Insertable	100 Piece(s)	334671

≤ 1800	–
1801 – 2400	2
> 2400	4

[13] Countersunk screw ST4.8 x 16; special head,
as an additional means of securing the pivot rest

Alternatively for thread engagement ≤ 6 mm:
Rivet nut set, metric → *from page 288*

			Nº
Countersunk screw	ST4,8x16	100 Piece(s)	728933

≤ 2400	–
> 2400	1

[39] Connecting rod, fixed, vertical (CR4) 1
→ *from page 274*

Width-dependent components

[*] T&T additional stay arm set | 160 kg[5]

			Nº
V.01	190	10 Piece(s)	728806
V.02	190	10 Piece(s)	728807

Contents:

[*]		#
[60]	Additional scissor stay arm, compl. V.01 / V.02	1
[61]	Retaining spring, compl.	1
[62]	Coupling rod	1
[63]	Scissor stay deadbolt	1
[64]	Scissor stay guide, compl. T&T | 130 kg	1
[65]	T&T stop | 130 kg	1

≤ 1300	–
> 1300	1

INFO
Tilt distance limited to 160 mm.

[*] CL corner drive set
Large packages → *from page 257*

		Nº
V.01	20 Piece(s)	728842
V.02	20 Piece(s)	728843

≤ 1300	–
> 1300	1

[40] Connecting rod, fixed, horizontal, bottom (CR5)
→ *from page 274*

[5] Installation of the mishandling device on the corner drive / flush-encased gearbox is prescribed in accordance with DIN 18360 (German construction contract procedures (VOB)).

Weight-dependent components

[*]	**Upgrade set | 130 kg**; S.kg > 90 kg	1
		№
max. 130 kg	10 Piece(s)	728695

Contents:

[*]		#
[13]	Countersunk screw ST4.8 x 16; special head	1
[23]	Fixing connecting-link | 130 kg	1

4.1.2 T&T | RC 2 | 90 - 130 kg

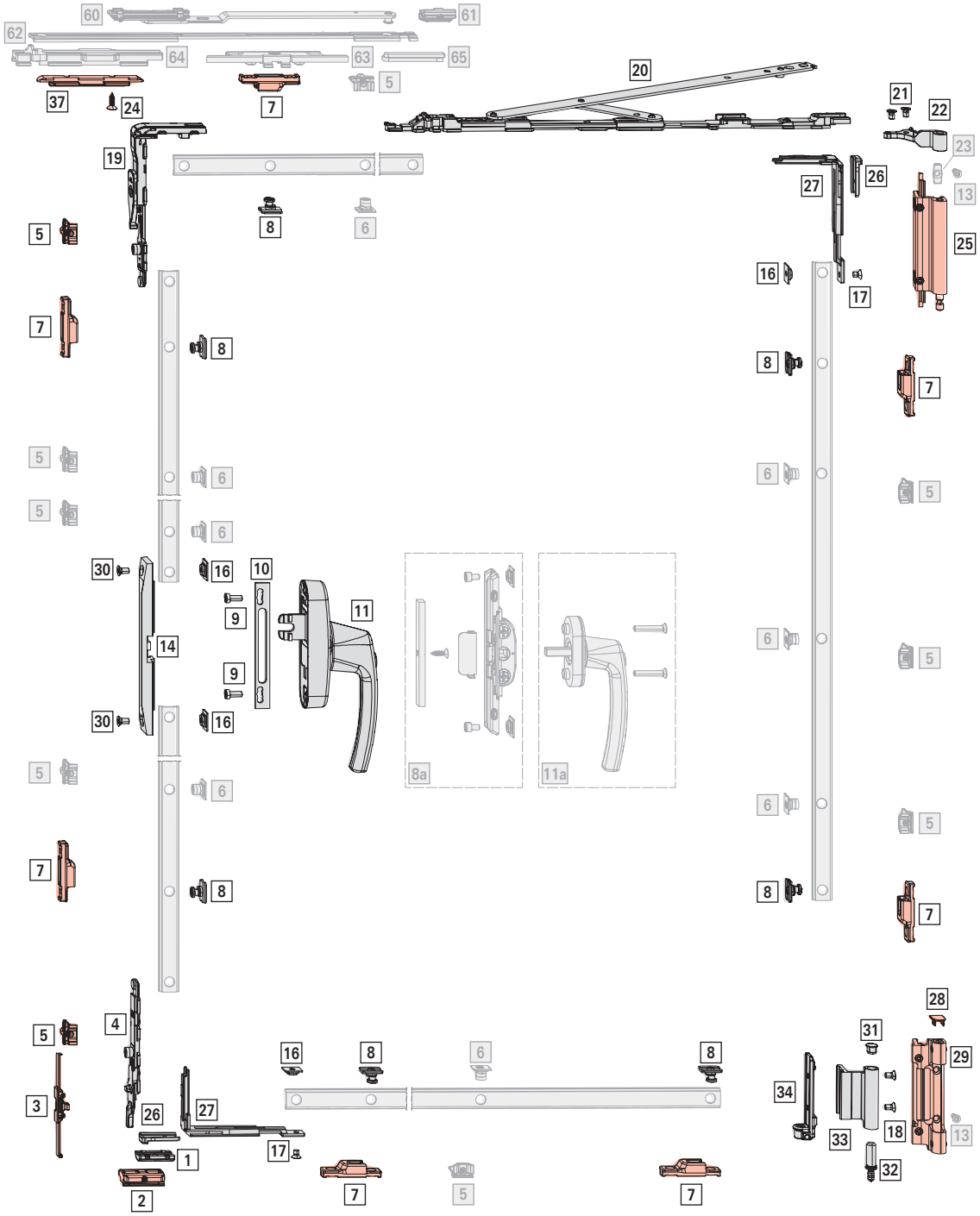

Application range

Sash width **SW**: 525 - 1600 mm

Sash height **SH**: 770 - 3000 mm

Sash weight **S.kg**: max. 130 kg

Hinge passage **HP**: > 3.5 / > 5 mm

Basic set

[*] T&T / TF hinge side set | 90 kg; SH ≤ 2700 mm; HP 3.5 mm — 1

Large packages → *from page 257*

				№
Clamp strip version 1	R01.5	Silver	20 Piece(s)	728787
	R05.4	Dark bronze	10 Piece(s)	728788
	R06.2	Jet black	10 Piece(s)	728789
	R07.2	Traffic white	10 Piece(s)	728790
	SF	Special colour	10 Piece(s)	728791
Clamp strip version 2	R01.5	Silver	10 Piece(s)	728792
	R05.4	Dark bronze	10 Piece(s)	728793
	R06.2	Jet black	10 Piece(s)	728794
	R07.2	Traffic white	10 Piece(s)	728795
	SF	Special colour	10 Piece(s)	728796
Clamp strip version 3	SF	Special colour	10 Piece(s)	728797

Contents:

[*]		#
[18]	Countersunk screw M5 x 9	2
[21]	Countersunk screw M5 x 8	2
[22]	Stay hinge, compl.	1
[25]	Stay bearing, compl.	1
[28]	Pivot rest end cap	1
[29]	Pivot rest, compl.	1
[31]	Corner hinge end cap	1
[32]	Pivot-rest pin	1
[33]	Corner hinge	1
[34]	Clampable corner bracket, compl.	1

INFO
Only use bearings / clamp strips which have been approved for the profile. Information can be obtained from Roto sales representatives.

[*] T&T / TF hinge side set | 90 kg; SH > 2700 mm, HP 5 mm — 1

Using the rivet nut set → *from page 288*

					№
Clamp strip version 1	SF	Special colour	20 Piece(s)	Left	834400
	SF	Special colour	20 Piece(s)	Right	834399
Clamp strip version 2	SF	Special colour	20 Piece(s)	Left	834156
	SF	Special colour	20 Piece(s)	Right	834155

Contents:

[*]		#
[22]	Stay hinge, compl.	1
[25]	Stay bearing, compl.	1
[28]	Pivot rest end cap	1
[29]	Pivot rest, compl.	1
[31]	Corner hinge end cap	1
	Corner hinge, reinforced	1
	Small parts set	1

[*] T&T locking components set — 1

Large packages → *from page 257*

		№
V.01	10 Piece(s)	728804
V.02	10 Piece(s)	728805

Contents:

[*]		#
[1]	Run-up block	1
[2]	Tilt striker	1
[3]	Anti-jemmy device V.01 / V.02	1
[4]	Tilt lock bolt	1
[5]	Striker V.01 / V.02	2
[19]	Corner drive with blocking device and retaining fork	1

[20] Sash stay — 1

				№
400	max. 100 kg	160	10 Piece(s)	728785
600	max. 130 kg	160	10 Piece(s)	728786

≤ 684	400
> 685	600

[*] CL SEC corner drive set — 2

Large packages → *from page 257*

		№
V.01 V.02	10 Piece(s)	728944

[*]		#
[16]	SEC connector	1
[17]	Countersunk screw M5 x 7	1
[26]	SEC retaining fork	1
[27]	CL SEC corner drive	1

[*] SEC rebate-clearance reduction set — 1

Large packages → *from page 275*

			№
SEC rebate-clearance reduction set	For corner drives	10 Piece(s)	728950

[*]		#
[24]	Countersunk screw ST4.8 x 16	1
[37]	SEC rebate-clearance reduction CD	1

[7]	SEC striker		7
V.01	9	100 Piece(s)	212637
V.02	9	100 Piece(s)	212638

[8]	SEC cam	RC 2	7
Insertable		100 Piece(s)	447245

Espagnolette and connector

[*]	SEC espagnolette protection set		1	
	Large packages			→ *from page 271*
	Alternatively:			
[8a]	SEC flush-encased gearbox set		1	→ *from page 282*
SEC espagnolette protection set		10 Piece(s)		728952

Contents:

[*]		#
[14]	SEC espagnolette protection	1
[16]	SEC connector	2
[30]	Countersunk screw M5 x 10	2

[9]	Cylinder screw M5 x 12		2
Cylinder screw	M5x12	100 Piece(s)	728925

[10]	Espagnolette support		1
Espagnolette support	For Roto Line AL geared-handle	100 Piece(s)	331937

[11]	**Roto Line AL geared-handle**, lockable		1	→ CTL_1
	Alternatively:			
[a]	Window handle – standard, lockable		1	→ CTL_1
	Countersunk screw M5 x 30		2	

Height-dependent components

[5]	Striker		
V.01	9	100 Piece(s)	728918
V.02	9	100 Piece(s)	728920

≤ 1300	–
1301 – 1800	2
1801 – 2400	4
> 2400	6

[6]	Cam, insertable	
Insertable	100 Piece(s)	334671

≤ 1300	–
1301 – 1800	2
1801 – 2400	4
> 2400	6

[13]	**Countersunk screw ST4.8 x 16; special head**, as an additional means of securing the pivot rest		
	Alternatively for thread engagement ≤ 6 mm:		
	Rivet nut set, metric		→ *from page 288*
Countersunk screw	ST4,8x16	100 Piece(s)	728933

≤ 2400	–
> 2400	1

Width-dependent components

[*]	T&T additional stay arm set | 160 kg[6]		
V.01	190	10 Piece(s)	728806
V.02	190	10 Piece(s)	728807

[6] Installation of the mishandling device on the corner drive / flush-encased gearbox is prescribed in accordance with DIN 18360 (German construction contract procedures (VOB)).

Contents:

[*]		#
[60]	Additional scissor stay arm, compl. V.01 / V.02	1
[61]	Retaining spring, compl.	1
[62]	Coupling rod	1
[63]	Scissor stay deadbolt	1
[64]	Scissor stay guide, compl. T&T | 130 kg	1
[65]	T&T stop | 130 kg	1

≤ 1300	–
> 1300	1

INFO
Tilt distance limited to 160 mm.

[5] Striker

			№
V.01	9	100 Piece(s)	728918
V.02	9	100 Piece(s)	728920

≤ 1300	–
> 1300	2

[6] Cam, insertable

		№
Insertable	100 Piece(s)	334671

≤ 1300	–
> 1300	2

Weight-dependent components

[*] **Upgrade set | 130 kg**; S.kg > 90 kg 1

		№
max. 130 kg	10 Piece(s)	728695

Contents:

[*]		#
[13]	Countersunk screw ST4.8 x 16; special head	1
[23]	Fixing connecting-link | 130 kg	1

4.1.3 T&T | RC 3 | 90 - 130 kg

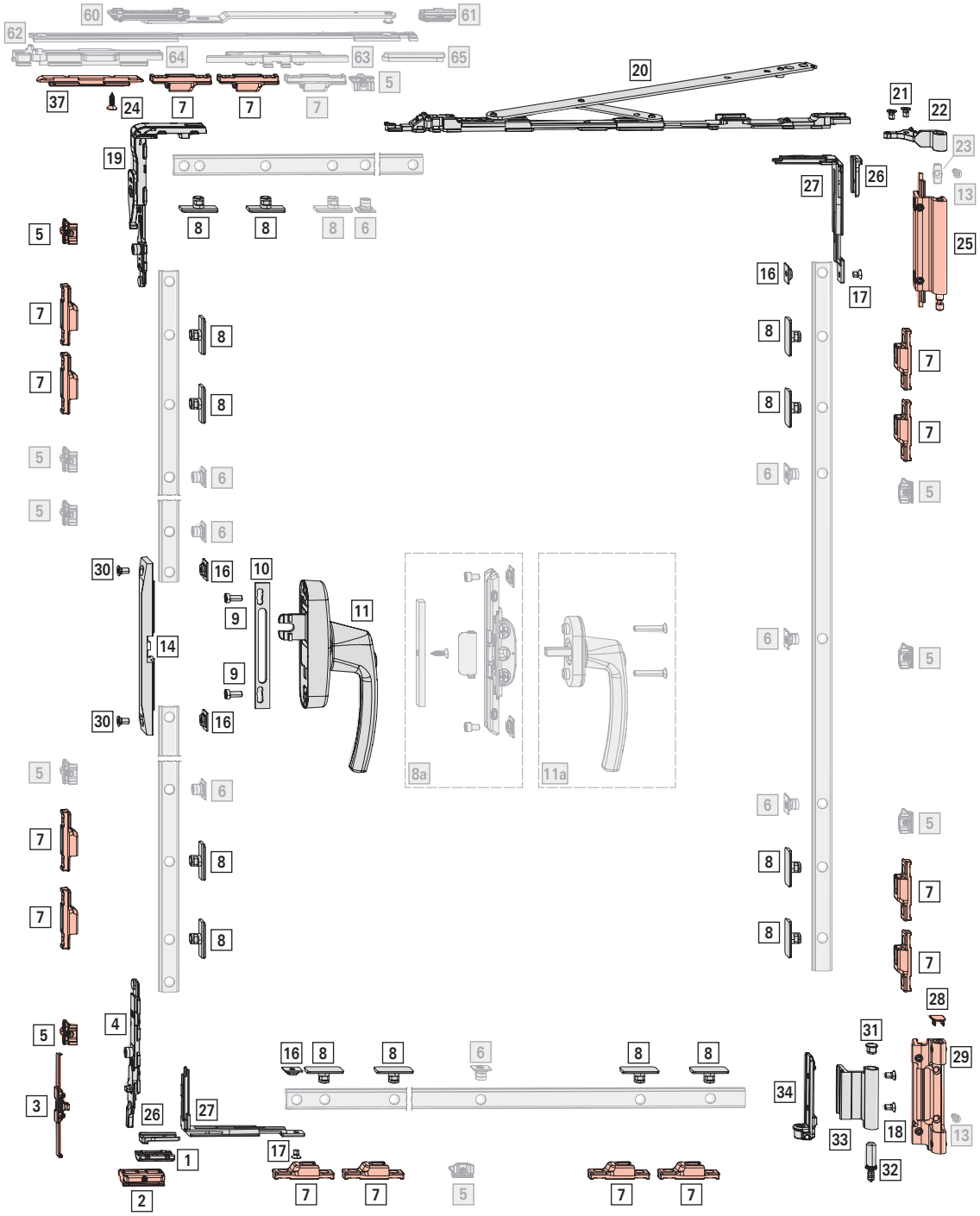

Application range

Sash width **SW**: 770 - 1600 mm

Sash height **SH**: 920 - 3000 mm

Sash weight **S.kg**: max. 130 kg

Hinge passage **HP**: > 3.5 / > 5 mm

Basic set

[*] T&T / TF hinge side set | 90 kg; 1
SH ≤ 2700 mm; HP 3.5 mm
Large packages → *from page 257*

				№
Clamp strip version 1	R01.5	Silver	20 Piece(s)	728787
	R05.4	Dark bronze	10 Piece(s)	728788
	R06.2	Jet black	10 Piece(s)	728789
	R07.2	Traffic white	10 Piece(s)	728790
	SF	Special colour	10 Piece(s)	728791
Clamp strip version 2	R01.5	Silver	10 Piece(s)	728792
	R05.4	Dark bronze	10 Piece(s)	728793
	R06.2	Jet black	10 Piece(s)	728794
	R07.2	Traffic white	10 Piece(s)	728795
	SF	Special colour	10 Piece(s)	728796
Clamp strip version 3	SF	Special colour	10 Piece(s)	728797

Contents:

[*]		#
[18]	Countersunk screw M5 x 9	2
[21]	Countersunk screw M5 x 8	2
[22]	Stay hinge, compl.	1
[25]	Stay bearing, compl.	1
[28]	Pivot rest end cap	1
[29]	Pivot rest, compl.	1
[31]	Corner hinge end cap	1
[32]	Pivot-rest pin	1
[33]	Corner hinge	1
[34]	Clampable corner bracket, compl.	1

INFO
Only use bearings / clamp strips which have been approved for the profile. Information can be obtained from Roto sales representatives.

[*] T&T / TF hinge side set | 90 kg; 1
SH > 2700 mm, HP 5 mm
Using the rivet nut set → *from page 288*

					№
Clamp strip version 1	SF	Special colour	20 Piece(s)	Left	834400
	SF	Special colour	20 Piece(s)	Right	834399
Clamp strip version 2	SF	Special colour	20 Piece(s)	Left	834156
	SF	Special colour	20 Piece(s)	Right	834155

Contents:

[*]		#
[22]	Stay hinge, compl.	1
[25]	Stay bearing, compl.	1
[28]	Pivot rest end cap	1
[29]	Pivot rest, compl.	1
[31]	Corner hinge end cap	1
	Corner hinge, reinforced	1
	Small parts set	1

[*] T&T locking components set 1
Large packages → *from page 257*

		№
V.01	10 Piece(s)	728804
V.02	10 Piece(s)	728805

Contents:

[*]		#
[1]	Run-up block	1
[2]	Tilt striker	1
[3]	Anti-jemmy device V.01 / V.02	1
[4]	Tilt lock bolt	1
[5]	Striker V.01 / V.02	2
[19]	Corner drive with blocking device and retaining fork	1

[20] Sash stay 1

			№
600	max. 130 kg	10 Piece(s)	728786

[*] CL SEC corner drive set 2
Large packages → *from page 257*

		№
V.01 V.02	10 Piece(s)	728944

[*]		#
[16]	SEC connector	1
[17]	Countersunk screw M5 x 7	1
[26]	SEC retaining fork	1
[27]	CL SEC corner drive	1

[*] SEC rebate-clearance reduction set 1
Large packages → *from page 275*

			№
SEC rebate-clearance reduction set	For corner drives	10 Piece(s)	728950

[*]		#
[24]	Countersunk screw ST4.8 x 16	1
[37]	SEC rebate-clearance reduction CD	1

[7]	SEC striker		14
V.01	9	100 Piece(s)	212637
V.02	9	100 Piece(s)	212638

[8]	SEC cam	RC 3	14
Insertable		100 Piece(s)	443530

Espagnolette and connector

[*]	SEC espagnolette protection set		1
	Large packages		→ *from page 271*
	Alternatively:		
[8a]	SEC flush-encased gearbox set	1	→ *from page 282*
SEC espagnolette protection set		10 Piece(s)	728952

Contents:

[*]		#
[14]	SEC espagnolette protection	1
[16]	SEC connector	2
[30]	Countersunk screw M5 x 10	2

[9]	Cylinder screw M5 x 12		2
Cylinder screw	M5x12	100 Piece(s)	728925

[10]	Espagnolette support		1
Espagnolette support	For Roto Line AL geared-handle	100 Piece(s)	331937

[11]	**Roto Line AL geared-handle**, lockable		1 → CTL_1
	Alternatively:		
[a]	Window handle – standard, lockable	1	→ CTL_1
	Countersunk screw M5 x 30	2	

Height-dependent components

[5]	Striker		
V.01	9	100 Piece(s)	728918
V.02	9	100 Piece(s)	728920

≤ 1300	–
1301 – 1800	2
1801 – 2400	4
> 2400	6

[6]	Cam, insertable	
Insertable	100 Piece(s)	334671

≤ 1300	–
1301 – 1800	2
1801 – 2400	4
> 2400	6

[13]	**Countersunk screw ST4.8 x 16; special head**, as an additional means of securing the pivot rest Alternatively for thread engagement ≤ 6 mm: Rivet nut set, metric	→ *from page 288*
Countersunk screw	ST4,8x16	100 Piece(s)	728933

≤ 2400	–
> 2400	1

Width-dependent components

[*]	T&T additional stay arm set | 160 kg[7]		
V.01	190	10 Piece(s)	728806
V.02	190	10 Piece(s)	728807

[7] Installation of the mishandling device on the corner drive / flush-encased gearbox is prescribed in accordance with DIN 18360 (German construction contract procedures (VOB)).

Contents:

[*]		#
[60]	Additional scissor stay arm, compl. V.01 / V.02	1
[61]	Retaining spring, compl.	1
[62]	Coupling rod	1
[63]	Scissor stay deadbolt	1
[64]	Scissor stay guide, compl. T&T | 130 kg	1
[65]	T&T stop | 130 kg	1

≤ 1300	–
> 1300	1

INFO
Tilt distance limited to 160 mm.

[5] Striker

			№
V.01	9	100 Piece(s)	728918
V.02	9	100 Piece(s)	728920

≤ 1300	–
> 1300	2

[6] Cam, insertable

		№
Insertable	100 Piece(s)	334671

≤ 1300	–
> 1300	2

[7] SEC striker

			№
V.01	9	100 Piece(s)	212637
V.02	9	100 Piece(s)	212638

≤ 1300	–
> 1300	1

[8] SEC cam RC 3

		№
Insertable	100 Piece(s)	443530

≤ 1300	–
> 1300	1

Weight-dependent components

[*] Upgrade set | 130 kg; S.kg > 90 kg 1

		№
max. 130 kg	10 Piece(s)	728695

Contents:

[*]		#
[13]	Countersunk screw ST4.8 x 16; special head	1
[23]	Fixing connecting-link | 130 kg	1

4.1.4 T&T | accessible | 90 - 130 kg

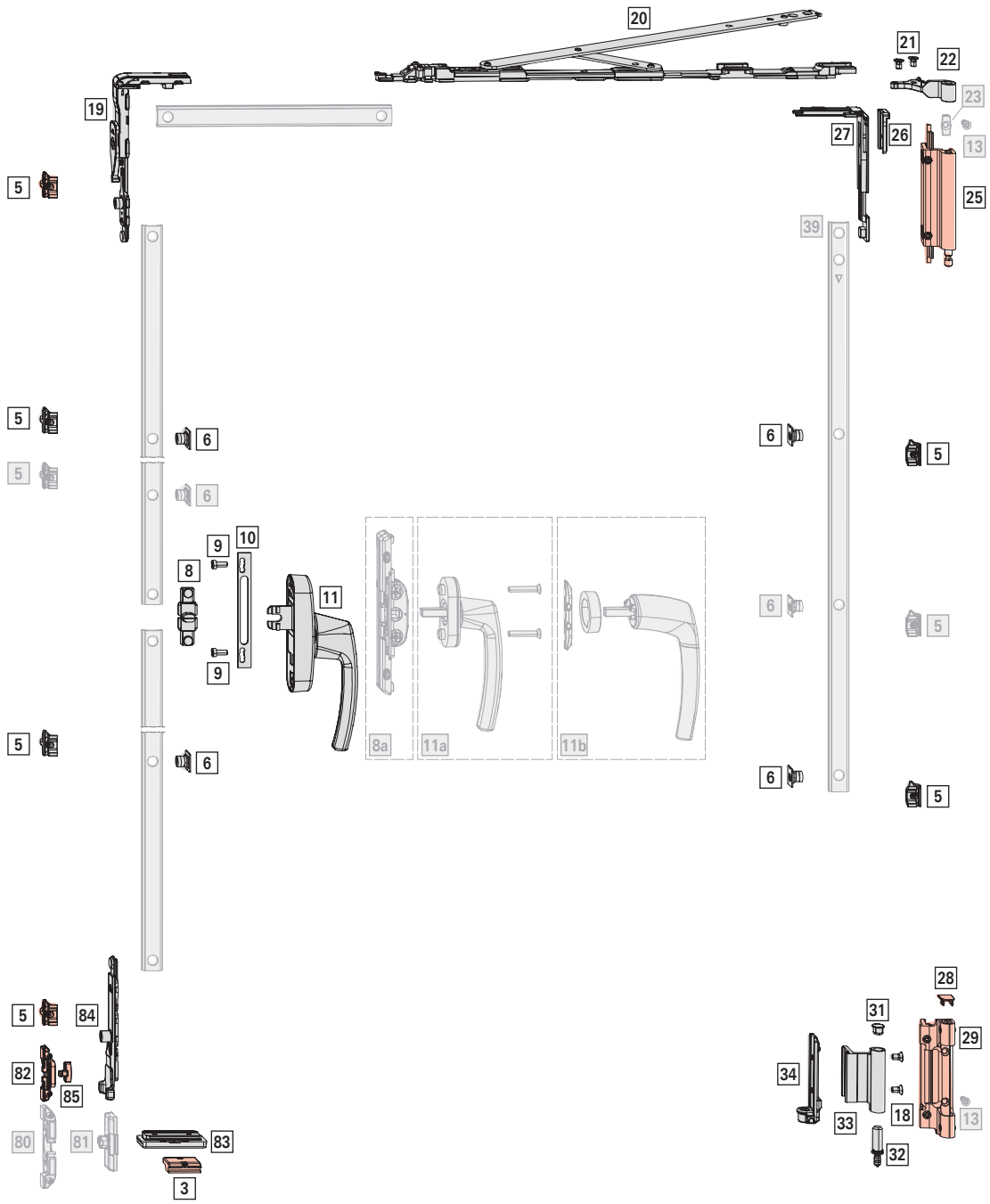

Application range

Sash width **SW**: 800 - 1300 mm

Sash height **SH**: 1800 - 2700 mm

Sash weight **S.kg**: max. 130 kg

Hinge passage **HP**: > 3.5 mm

Basic set

[*] T&T / TF hinge side set | 90 kg; SH ≤ 2700 mm; HP 3.5 mm — 1

Large packages → *from page 257*

				№
Clamp strip version 1	R01.5	Silver	20 Piece(s)	728787
	R05.4	Dark bronze	10 Piece(s)	728788
	R06.2	Jet black	10 Piece(s)	728789
	R07.2	Traffic white	10 Piece(s)	728790
	SF	Special colour	10 Piece(s)	728791
Clamp strip version 2	R01.5	Silver	10 Piece(s)	728792
	R05.4	Dark bronze	10 Piece(s)	728793
	R06.2	Jet black	10 Piece(s)	728794
	R07.2	Traffic white	10 Piece(s)	728795
	SF	Special colour	10 Piece(s)	728796
Clamp strip version 3	SF	Special colour	10 Piece(s)	728797

Contents:

[*]		#
[18]	Countersunk screw M5 x 9	2
[21]	Countersunk screw M5 x 8	2
[22]	Stay hinge, compl.	1
[25]	Stay bearing, compl.	1
[28]	Pivot rest end cap	1
[29]	Pivot rest, compl.	1
[31]	Corner hinge end cap	1
[32]	Pivot-rest pin	1
[33]	Corner hinge	1
[34]	Clampable corner bracket, compl.	1

INFO
Only use bearings / clamp strips which have been approved for the profile. Information can be obtained from Roto sales representatives.

[*] T&T locking components set | 130 kg, accessible — 1

		№
V.01	1 Piece(s)	817137
V.02	1 Piece(s)	817139

Contents:

[*]		#
[5]	Striker V.01 / V.02	1
[82]	Anti-jemmy device tilt lock bolt	1
[84]	Tilt lock bolt (accessible)	1
[85]	Damping element	1

[*] Run-up block set — 1

INFO
For floating mullions, the floating-mullion run-up block set (see second opening sash) replaces the run-up block set.

		№
V.01	1 Piece(s)	817136
V.02	1 Piece(s)	817138

Contents:

[*]		#
[3]	Run-up wedge V.01 / V.02	1
[83]	Run-up block 6.5 (two-part)	1

[20] Sash stay — 1

			№
600	max. 130 kg	10 Piece(s)	728786

[19] Corner drive with blocking device and retaining fork — 1

		№
Corner drive with blocking device and retaining fork	100 Piece(s)	490173

[*] CL corner drive set — 1

Large packages → *from page 257*

		№
V.01	20 Piece(s)	728842
V.02	20 Piece(s)	728843

Contents:

[*]		#
[5]	Striker V.01 / V.02	2
[6]	Cam, insertable	2
[26]	Retaining fork	1
[27]	CL corner drive	1

[5] Striker — 3

			№
V.01	9	100 Piece(s)	728918
V.02	9	100 Piece(s)	728920

[6] Cam, insertable — 2

		№
Insertable	100 Piece(s)	334671

Espagnolette and connector

[*] T connector set — 1

Alternatively:

[8a] Flush-encased gearbox	1	→ *from page 272*
		№
AL T connector set	10 Piece(s)	728981

Contents:

[*]		
[8]	T connector	1
[9]	Cylinder screw M5 x 12	2

[10] Espagnolette support			1
			№
Espagnolette support	For Roto Line AL geared-handle	100 Piece(s)	331937

[11] Roto Line AL geared-handle		1
		→ CTL_1
	Alternatively:	
[a]	Window handle – standard	1 → CTL_1
	Countersunk screw M5 x 30	2
[b]	Handle without escutcheon	1 → CTL_1
	Ring for handle without escutcheon	1
	Mounting plate	1

Height-dependent components

[5] Striker			
			№
V.01	9	100 Piece(s)	728918
V.02	9	100 Piece(s)	728920

≤ 2400	–
> 2400	2

[6] Cam, insertable		
		№
Insertable	100 Piece(s)	334671

≤ 2400	–
> 2400	2

[13] Countersunk screw ST4.8 x 16; special head, as an additional means of securing the pivot rest
Alternatively for thread engagement ≤ 6 mm:

Rivet nut set, metric			→ *from page 288*
			№
Countersunk screw	ST4,8x16	100 Piece(s)	728933

≤ 2400	–
> 2400	1

[39] Connecting rod, fixed, vertical (CR4)	1
→ *from page 274*	

Weight-dependent components

[*] Upgrade set | 130 kg; S.kg > 90 kg		1
		№
max. 130 kg	10 Piece(s)	728695

Contents:

[*]		#
[13]	Countersunk screw ST4.8 x 16; special head	1
[23]	Fixing connecting-link | 130 kg	1

INFO
From S.kg > 90 kg, the use of a countersunk screw ST4.8 x 16 is mandatory as an additional means of securing the pivot rest (see [13] Height-dependent components).

Optional

[*] Bullet-catch set		1
		№
Bullet catch set	10 Piece(s)	728924

Contents:

[*]		#
[80]	Bullet catch, compl.	1
[81]	Bullet-catch cam, compl.	1

4.1.5 T&T | 160 kg

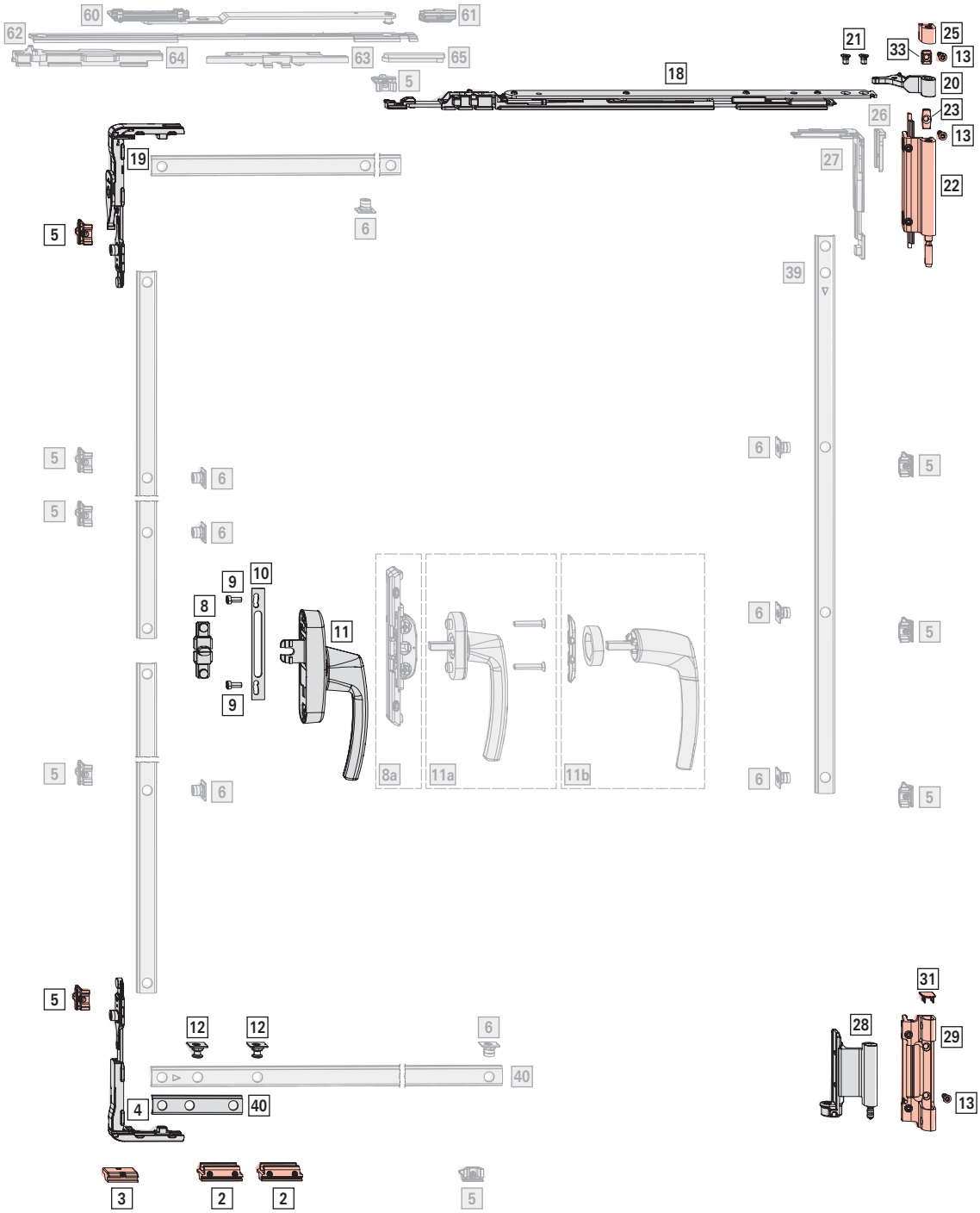
60
61
62
64
63
65
5
18
21
33
25
13
20
23
13
22
26
27
19
6
5
39
5
6
5
6
5
6
9
10
8
11
9
6
5
8a
11a
11b
6
5
5
31
28
29
13
12
12
6
40
4
40
3
2
2
5

Application range

Sash width **SW**: 600 - 1600 mm

Sash height **SH**: 1000 - 3000 mm

Sash weight **S.kg**: max. 160 kg

Hinge passage **HP**: > 5 mm

Basic set

[*] T&T / TF hinge side set | 160 kg 1

					№
Clamp strip version 1	R01.5	Silver	Left	10 Piece(s)	793411
			Right	10 Piece(s)	793410
	R05.4	Dark bronze	Left	10 Piece(s)	793417
			Right	10 Piece(s)	793416
	R06.2M	Jet black, matt	Left	10 Piece(s)	793413
			Right	10 Piece(s)	793412
	R07.2	Traffic white	Left	10 Piece(s)	793415
			Right	10 Piece(s)	793414
	SF	Special colour	Left	10 Piece(s)	793419
			Right	10 Piece(s)	793418
	Roh	Untreated	Left	10 Piece(s)	793421
			Right	10 Piece(s)	793420
Clamp strip version 2	R01.5	Silver	Left	10 Piece(s)	793425
			Right	10 Piece(s)	793424
	R05.4	Dark bronze	Left	10 Piece(s)	793431
			Right	10 Piece(s)	793430
	R06.2M	Jet black, matt	Left	10 Piece(s)	793427
			Right	10 Piece(s)	793426
	R07.2	Traffic white	Left	10 Piece(s)	793429
			Right	10 Piece(s)	793428
	SF	Special colour	Left	10 Piece(s)	793433
			Right	10 Piece(s)	793432
	Roh	Untreated	Left	10 Piece(s)	793435
			Right	10 Piece(s)	793434
Clamp strip version 3	SF	Special colour	Left	10 Piece(s)	793437
			Right	10 Piece(s)	793436
	Roh	Untreated	Left	10 Piece(s)	793439
			Right	10 Piece(s)	793438

INFO
Untreated components for users who intend to paint the component themselves.

Contents:

[*]		#
[13]	Countersunk screw ST4.8 x 16; special head	3
[20]	Stay hinge, compl. | 160 kg	1
[21]	Countersunk screw M5 x 8	2
[22]	Stay bearing, compl. | 160 kg	1
[23]	Fixing connecting-link | 130 kg	1
[25]	Counter bearing	1
[28]	Corner hinge, compl. | 160 kg	1
[29]	Pivot rest, compl. | 160 kg	1
[31]	Pivot rest end cap	1
[33]	Fixing connecting-link | 160 kg	1

INFO
Only use bearings / clamp strips which have been approved for the profile. Information can be obtained from Roto sales representatives.

[*] T&T locking components set 1
Large packages → *from page 257*

		№
V.01	10 Piece(s)	793475
V.02	10 Piece(s)	793476

Contents:

[*]		#
[2]	TF tilt striker	2
[3]	Run-up wedge V.01 / V.02	2
[4]	Corner drive without blocking device, with retaining fork	1
[5]	Striker V.01 / V.02	2
[12]	TF tilt lock bolt	2
[19]	Corner drive with blocking device and retaining fork	1

[18] Sash stay 1

				№
620	max. 160 kg	190	10 Piece(s)	793404

[40] Connecting rod, fixed, horizontal, bottom (CR5)
→ *from page 274*

Espagnolette and connector

[*] T connector set 1
Alternatively:
[8a] Flush-encased gearbox 1 → *from page 272*

		№
AL T connector set	10 Piece(s)	728981

Contents:

[*]		
[8]	T connector	1
[9]	Cylinder screw M5 x 12	2

[10] Espagnolette support — 1

			Nº
Espagnolette support	For Roto Line AL geared-handle	100 Piece(s)	331937

[11] Roto Line AL geared-handle — 1

→ CTL_1

Alternatively:

[a]	Window handle – standard	1	→ CTL_1
	Countersunk screw M5 x 30	2	
[b]	Handle without escutcheon	1	→ CTL_1
	Ring for handle without escutcheon	1	
	Mounting plate	1	

Height-dependent components

[*] CL corner drive set

Large packages → *from page 257*

		Nº
V.01	20 Piece(s)	728842
V.02	20 Piece(s)	728843

Contents:

[*]		#
[5]	Striker V.01 / V.02	2
[6]	Cam, insertable	2
[26]	Retaining fork	1
[27]	CL corner drive	1

≤ 1300	–
> 1300	1

[5] Striker

			Nº
V.01	9	100 Piece(s)	728918
V.02	9	100 Piece(s)	728920

≤ 1800	–
1801 – 2400	2
> 2400	4

[6] Cam, insertable

		Nº
Insertable	100 Piece(s)	334671

≤ 1800	–
1801 – 2400	2
> 2400	4

[39] Connecting rod, fixed, vertical (CR4) — 1

→ *from page 274*

Width-dependent components

[*] T&T additional stay arm set | 160 kg[8]

			Nº
V.01	190	10 Piece(s)	728806
V.02	190	10 Piece(s)	728807

Contents:

[*]		#
[60]	Additional scissor stay arm, compl. V.01 / V.02	1
[61]	Retaining spring, compl.	1
[62]	Coupling rod	1
[63]	Scissor stay deadbolt	1
[64]	Scissor stay guide, compl. T&T | 130 kg	1
[65]	T&T stop | 130 kg	1

≤ 1300	–
> 1300	1

INFO
Tilt distance limited to 190 mm.

[5] Striker

			Nº
V.01	9	100 Piece(s)	728918
V.02	9	100 Piece(s)	728920

≤ 1300	–
> 1300	2

[6] Cam, insertable

		Nº
Insertable	100 Piece(s)	334671

≤ 1300	–
> 1300	2

[8] Installation of the mishandling device on the corner drive / flush-encased gearbox is prescribed in accordance with DIN 18360 (German construction contract procedures (VOB)).

4.1.6 T&T | RC 2 | 160 kg

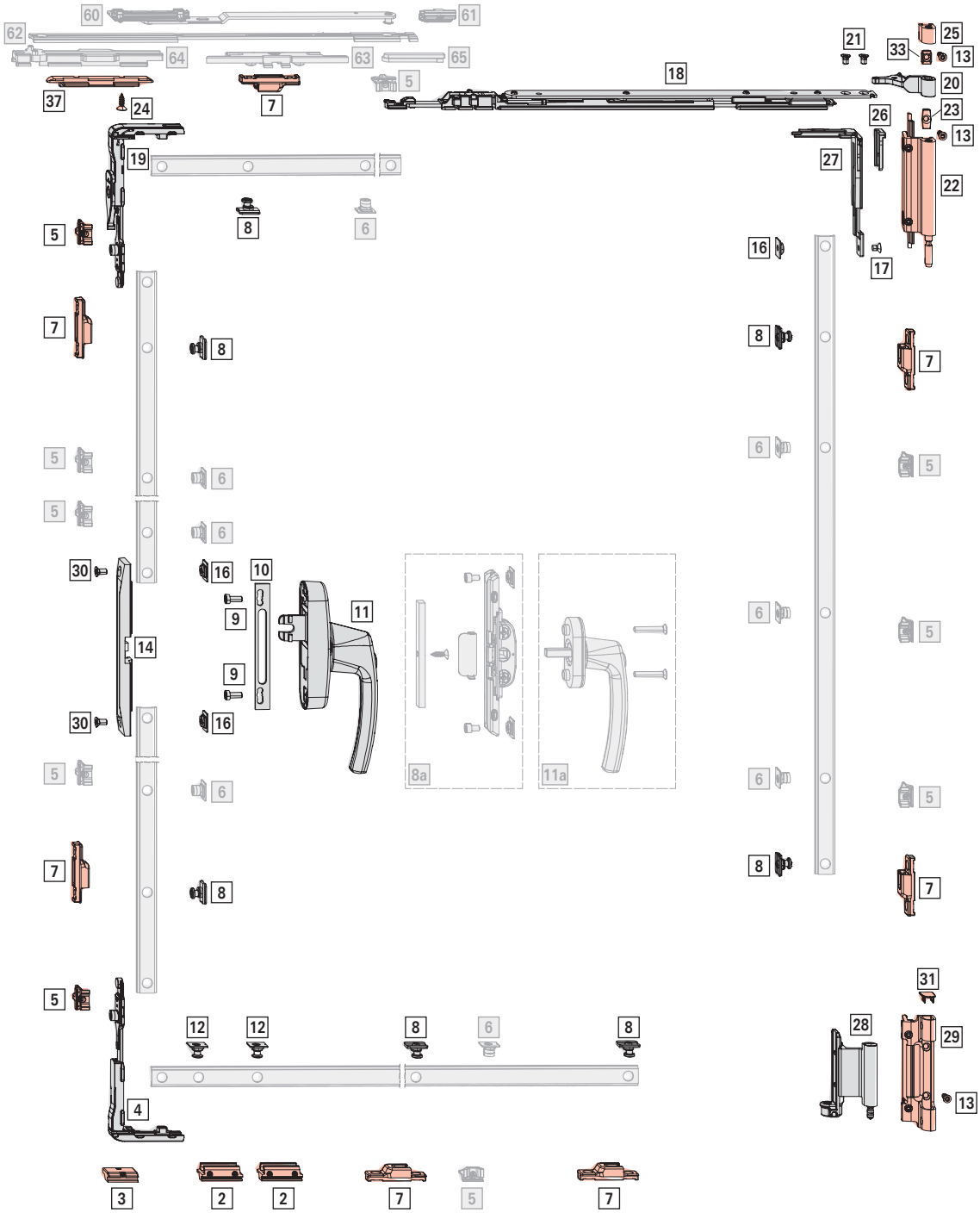

Application range

Sash width **SW**: 680 - 1600 mm

Sash height **SH**: 1000 - 3000 mm

Sash weight **S.kg**: max. 160 kg

Hinge passage **HP**: > 5 mm

Basic set

[*] T&T / TF hinge side set | 160 kg 1

					№
Clamp strip version 1	R01.5	Silver	Left	10 Piece(s)	793411
			Right	10 Piece(s)	793410
	R05.4	Dark bronze	Left	10 Piece(s)	793417
			Right	10 Piece(s)	793416
	R06.2M	Jet black, matt	Left	10 Piece(s)	793413
			Right	10 Piece(s)	793412
	R07.2	Traffic white	Left	10 Piece(s)	793415
			Right	10 Piece(s)	793414
	SF	Special colour	Left	10 Piece(s)	793419
			Right	10 Piece(s)	793418
	Roh	Untreated	Left	10 Piece(s)	793421
			Right	10 Piece(s)	793420
Clamp strip version 2	R01.5	Silver	Left	10 Piece(s)	793425
			Right	10 Piece(s)	793424
	R05.4	Dark bronze	Left	10 Piece(s)	793431
			Right	10 Piece(s)	793430
	R06.2M	Jet black, matt	Left	10 Piece(s)	793427
			Right	10 Piece(s)	793426
	R07.2	Traffic white	Left	10 Piece(s)	793429
			Right	10 Piece(s)	793428
	SF	Special colour	Left	10 Piece(s)	793433
			Right	10 Piece(s)	793432
	Roh	Untreated	Left	10 Piece(s)	793435
			Right	10 Piece(s)	793434
Clamp strip version 3	SF	Special colour	Left	10 Piece(s)	793437
			Right	10 Piece(s)	793436
	Roh	Untreated	Left	10 Piece(s)	793439
			Right	10 Piece(s)	793438

INFO
Untreated components for users who intend to paint the component themselves.

Contents:

[*]		#
[13]	Countersunk screw ST4.8 x 16; special head	3
[20]	Stay hinge, compl. | 160 kg	1
[21]	Countersunk screw M5 x 8	2
[22]	Stay bearing, compl. | 160 kg	1
[23]	Fixing connecting-link | 130 kg	1
[25]	Counter bearing	1
[28]	Corner hinge, compl. | 160 kg	1
[29]	Pivot rest, compl. | 160 kg	1
[31]	Pivot rest end cap	1
[33]	Fixing connecting-link | 160 kg	1

INFO
Only use bearings / clamp strips which have been approved for the profile. Information can be obtained from Roto sales representatives.

[*] T&T locking components set 1
Large packages → *from page 257*

		№
V.01	10 Piece(s)	793475
V.02	10 Piece(s)	793476

Contents:

[*]		#
[2]	TF tilt striker	2
[3]	Run-up wedge V.01 / V.02	2
[4]	Corner drive without blocking device, with retaining fork	1
[5]	Striker V.01 / V.02	2
[12]	TF tilt lock bolt	2
[19]	Corner drive with blocking device and retaining fork	1

[18] Sash stay 1

				№
620	max. 160 kg	190	10 Piece(s)	793404

[*] CL SEC corner drive set 1
Large packages → *from page 257*

		№
V.01 V.02	10 Piece(s)	728944

[*]		#
[16]	SEC connector	1
[17]	Countersunk screw M5 x 7	1
[26]	SEC retaining fork	1
[27]	CL SEC corner drive	1

[*] SEC rebate-clearance reduction set 1

Large packages → *from page 275*			
			№
SEC rebate-clearance reduction set	For corner drives	10 Piece(s)	728950

[*]		#
[24]	Countersunk screw ST4.8 x 16	1
[37]	SEC rebate-clearance reduction CD	1

[7]	SEC striker			7
				№
V.01	9	100 Piece(s)		212637
V.02	9	100 Piece(s)		212638

[8]	SEC cam	RC 2	7
			№
Insertable		100 Piece(s)	447245

Espagnolette and connector

[*]	SEC espagnolette protection set		1
	Large packages		→ *from page 271*
	Alternatively:		
[8a]	SEC flush-encased gearbox set	1	→ *from page 282*
			№
SEC espagnolette protection set		10 Piece(s)	728952

Contents:

[*]		#
[14]	SEC espagnolette protection	1
[16]	SEC connector	2
[30]	Countersunk screw M5 x 10	2

[9]	Cylinder screw M5 x 12			2
				№
Cylinder screw		M5x12	100 Piece(s)	728925

[10]	Espagnolette support			1
				№
Espagnolette support		For Roto Line AL geared-handle	100 Piece(s)	331937

[11]	Roto Line AL geared-handle, lockable	1 → CTL_1
	Alternatively:	
[a]	Window handle – standard, lockable	1 → CTL_1
	Countersunk screw M5 x 30	2

Height-dependent components

[5]	Striker		
			№
V.01	9	100 Piece(s)	728918
V.02	9	100 Piece(s)	728920

≤ 1300	–
1301 – 1800	2
1801 – 2400	4
> 2400	6

[6]	Cam, insertable	
		№
Insertable	100 Piece(s)	334671

≤ 1300	–
1301 – 1800	2
1801 – 2400	4
> 2400	6

Width-dependent components

[*]	T&T additional stay arm set | 160 kg[9]		
			№
V.01	190	10 Piece(s)	728806
V.02	190	10 Piece(s)	728807

Contents:

[*]		#
[60]	Additional scissor stay arm, compl. V.01 / V.02	1
[61]	Retaining spring, compl.	1
[62]	Coupling rod	1
[63]	Scissor stay deadbolt	1
[64]	Scissor stay guide, compl. T&T | 130 kg	1
[65]	T&T stop | 130 kg	1

≤ 1300	–
> 1300	1

INFO
Tilt distance limited to 190 mm.

[9] Installation of the mishandling device on the corner drive / flush-encased gearbox is prescribed in accordance with DIN 18360 (German construction contract procedures (VOB)).

[5] Striker

			№
V.01	9	100 Piece(s)	728918
V.02	9	100 Piece(s)	728920

≤ 1300	–
> 1300	2

[6] Cam, insertable

		№
Insertable	100 Piece(s)	334671

≤ 1300	–
> 1300	2

4.1.7 T&T | RC 3 | 160 kg

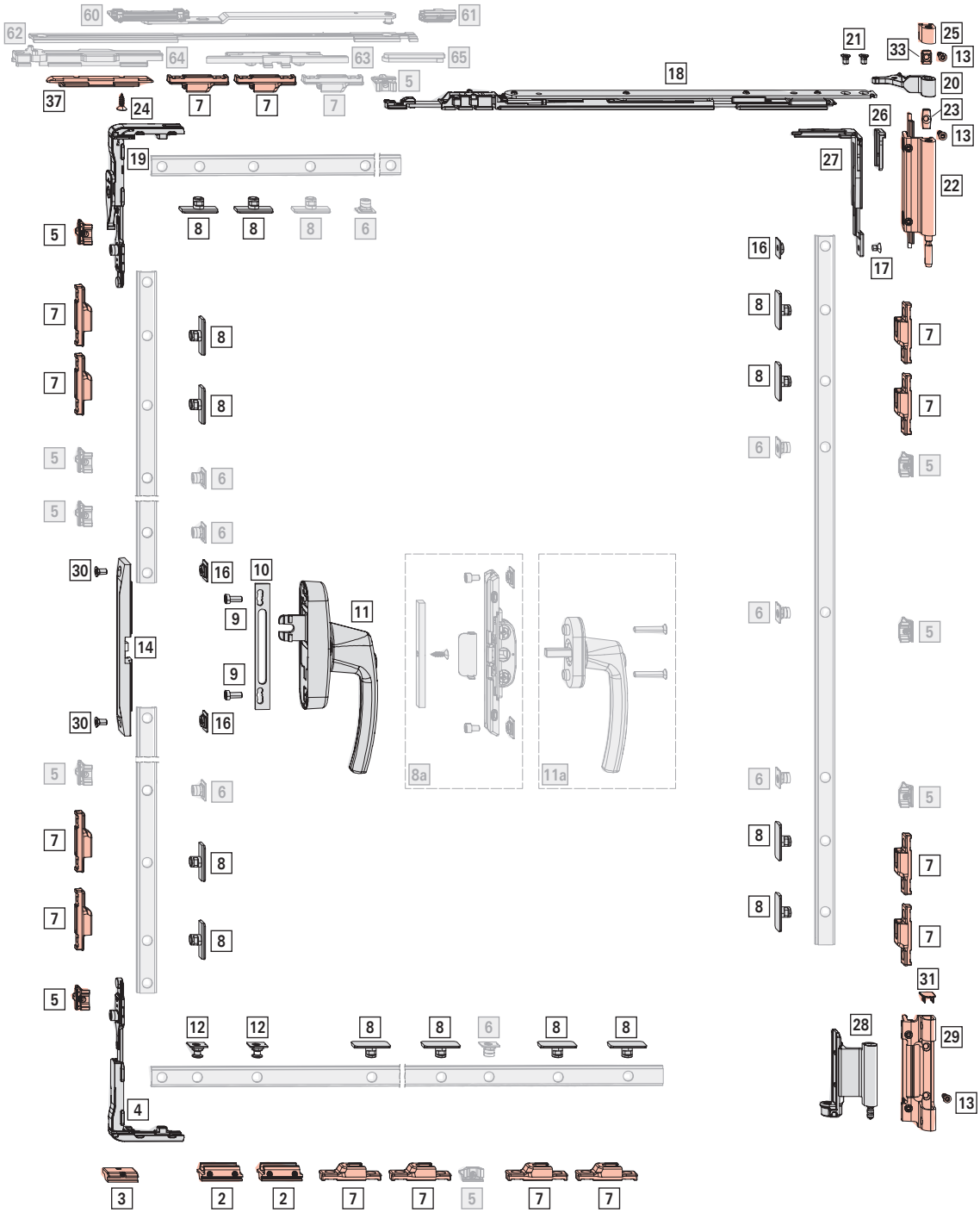

Application range

Sash width **SW**: 755 - 1600 mm

Sash height **SH**: 1000 - 3000 mm

Sash weight **S.kg**: max. 160 kg

Hinge passage **HP**: > 5 mm

Basic set

[*] T&T / TF hinge side set | 160 kg 1

					№
Clamp strip version 1	R01.5	Silver	Left	10 Piece(s)	793411
			Right	10 Piece(s)	793410
	R05.4	Dark bronze	Left	10 Piece(s)	793417
			Right	10 Piece(s)	793416
	R06.2M	Jet black, matt	Left	10 Piece(s)	793413
			Right	10 Piece(s)	793412
	R07.2	Traffic white	Left	10 Piece(s)	793415
			Right	10 Piece(s)	793414
	SF	Special colour	Left	10 Piece(s)	793419
			Right	10 Piece(s)	793418
	Roh	Untreated	Left	10 Piece(s)	793421
			Right	10 Piece(s)	793420
Clamp strip version 2	R01.5	Silver	Left	10 Piece(s)	793425
			Right	10 Piece(s)	793424
	R05.4	Dark bronze	Left	10 Piece(s)	793431
			Right	10 Piece(s)	793430
	R06.2M	Jet black, matt	Left	10 Piece(s)	793427
			Right	10 Piece(s)	793426
	R07.2	Traffic white	Left	10 Piece(s)	793429
			Right	10 Piece(s)	793428
	SF	Special colour	Left	10 Piece(s)	793433
			Right	10 Piece(s)	793432
	Roh	Untreated	Left	10 Piece(s)	793435
			Right	10 Piece(s)	793434
Clamp strip version 3	SF	Special colour	Left	10 Piece(s)	793437
			Right	10 Piece(s)	793436
	Roh	Untreated	Left	10 Piece(s)	793439
			Right	10 Piece(s)	793438

INFO
Untreated components for users who intend to paint the component themselves.

Contents:

[*]		#
[13]	Countersunk screw ST4.8 x 16; special head	3
[20]	Stay hinge, compl. | 160 kg	1
[21]	Countersunk screw M5 x 8	2
[22]	Stay bearing, compl. | 160 kg	1
[23]	Fixing connecting-link | 130 kg	1
[25]	Counter bearing	1
[28]	Corner hinge, compl. | 160 kg	1
[29]	Pivot rest, compl. | 160 kg	1
[31]	Pivot rest end cap	1
[33]	Fixing connecting-link | 160 kg	1

INFO
Only use bearings / clamp strips which have been approved for the profile. Information can be obtained from Roto sales representatives.

[*] T&T locking components set 1
Large packages → *from page 257*

		№
V.01	10 Piece(s)	793475
V.02	10 Piece(s)	793476

Contents:

[*]		#
[2]	TF tilt striker	2
[3]	Run-up wedge V.01 / V.02	2
[4]	Corner drive without blocking device, with retaining fork	1
[5]	Striker V.01 / V.02	2
[12]	TF tilt lock bolt	2
[19]	Corner drive with blocking device and retaining fork	1

[18] Sash stay 1

				№
620	max. 160 kg	190	10 Piece(s)	793404

[*] CL SEC corner drive set 1
Large packages → *from page 257*

		№
V.01 V.02	10 Piece(s)	728944

[*]		#
[16]	SEC connector	1
[17]	Countersunk screw M5 x 7	1
[26]	SEC retaining fork	1
[27]	CL SEC corner drive	1

[*] SEC rebate-clearance reduction set 1

Large packages → *from page 275*			
			№
SEC rebate-clearance reduction set	For corner drives	10 Piece(s)	728950

[*]		#
[24]	Countersunk screw ST4.8 x 16	1
[37]	SEC rebate-clearance reduction CD	1

[7]	SEC striker			14
				№
V.01	9	100 Piece(s)		212637
V.02	9	100 Piece(s)		212638

[8]	SEC cam	RC 3	14
			№
Insertable		100 Piece(s)	443530

Espagnolette and connector

[*]	SEC espagnolette protection set		1
	Large packages		→ *from page 271*
	Alternatively:		
[8a]	SEC flush-encased gearbox set	1	→ *from page 282*
			№
SEC espagnolette protection set		10 Piece(s)	728952

Contents:

[*]		#
[14]	SEC espagnolette protection	1
[16]	SEC connector	2
[30]	Countersunk screw M5 x 10	2

[9]	Cylinder screw M5 x 12			2
				№
Cylinder screw		M5x12	100 Piece(s)	728925

[10]	Espagnolette support			1
				№
Espagnolette support		For Roto Line AL geared-handle	100 Piece(s)	331937

[11]	Roto Line AL geared-handle, lockable	1 → CTL_1
	Alternatively:	
[a]	Window handle – standard, lockable	1 → CTL_1
	Countersunk screw M5 x 30	2

Height-dependent components

[5]	Striker		
			№
V.01	9	100 Piece(s)	728918
V.02	9	100 Piece(s)	728920

≤ 1300	–
1301 – 1800	2
1801 – 2400	4
> 2400	6

[6]	Cam, insertable	
		№
Insertable	100 Piece(s)	334671

≤ 1300	–
1301 – 1800	2
1801 – 2400	4
> 2400	6

Width-dependent components

[*]	T&T additional stay arm set | 160 kg[10]			
				№
V.01		190	10 Piece(s)	728806
V.02		190	10 Piece(s)	728807

Contents:

[*]		#
[60]	Additional scissor stay arm, compl. V.01 / V.02	1
[61]	Retaining spring, compl.	1
[62]	Coupling rod	1
[63]	Scissor stay deadbolt	1
[64]	Scissor stay guide, compl. T&T | 130 kg	1
[65]	T&T stop | 130 kg	1

≤ 1300	–
> 1300	1

INFO
Tilt distance limited to 190 mm.

[10] Installation of the mishandling device on the corner drive / flush-encased gearbox is prescribed in accordance with DIN 18360 (German construction contract procedures (VOB)).

[5] Striker

			Nº
V.01	9	100 Piece(s)	728918
V.02	9	100 Piece(s)	728920

≤ 1300	–
> 1300	2

[6] Cam, insertable

		Nº
Insertable	100 Piece(s)	334671

≤ 1300	–
> 1300	2

[7] SEC striker

			Nº
V.01	9	100 Piece(s)	212637
V.02	9	100 Piece(s)	212638

≤ 1300	–
> 1300	1

[8] SEC cam RC 3

		Nº
Insertable	100 Piece(s)	443530

≤ 1300	–
> 1300	1

4.1.8 T&T | accessible | 160 kg

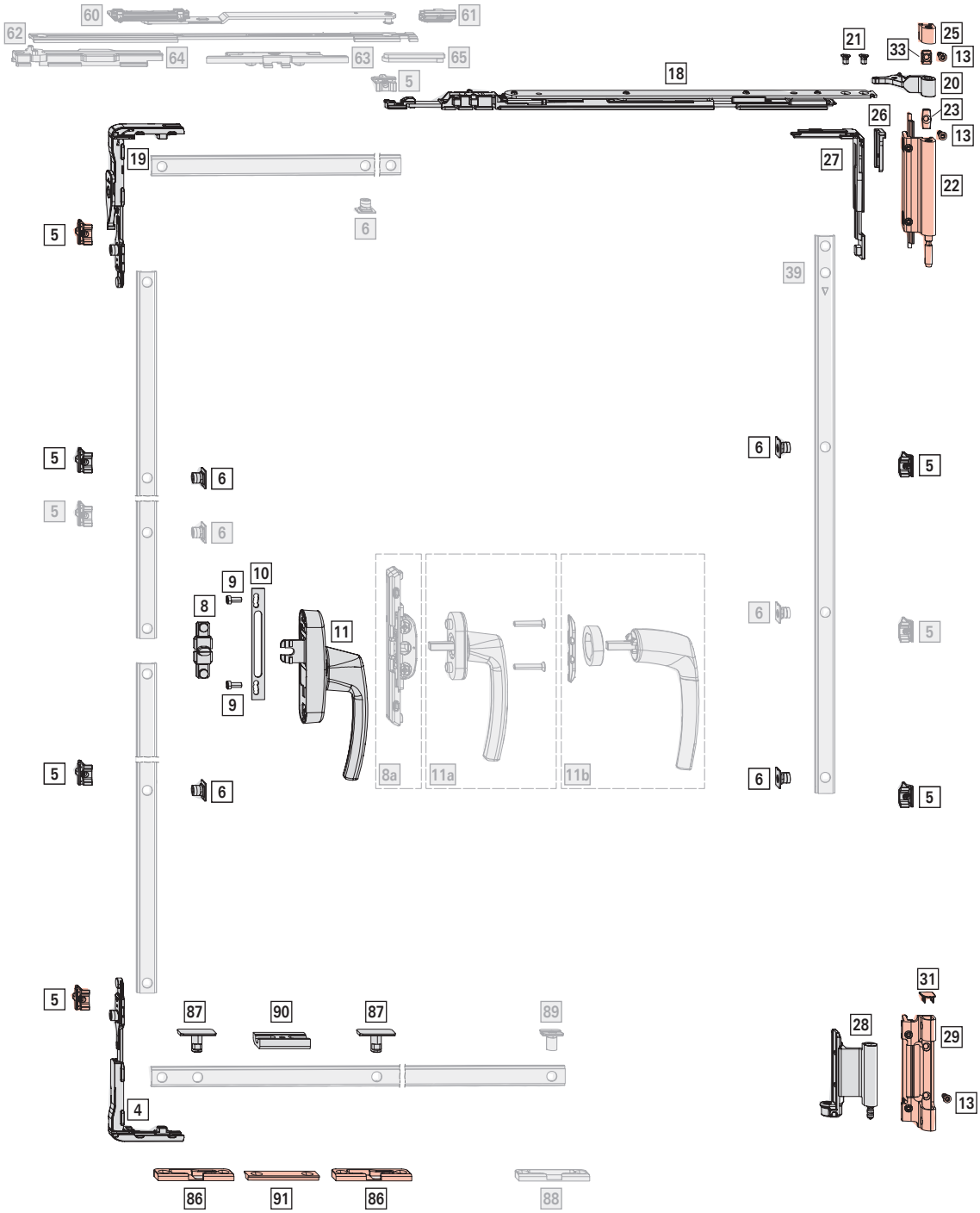

Application range

Sash width **SW**: 800 - 1600 mm

Sash height **SH**: 1800 - 2700 mm

Sash weight **S.kg**: max. 160 kg

Hinge passage **HP**: > 5 mm

Basic set

[*] T&T / TF hinge side set | 160 kg 1

					№
Clamp strip version 1	R01.5	Silver	Left	10 Piece(s)	793411
			Right	10 Piece(s)	793410
	R05.4	Dark bronze	Left	10 Piece(s)	793417
			Right	10 Piece(s)	793416
	R06.2M	Jet black, matt	Left	10 Piece(s)	793413
			Right	10 Piece(s)	793412
	R07.2	Traffic white	Left	10 Piece(s)	793415
			Right	10 Piece(s)	793414
	SF	Special colour	Left	10 Piece(s)	793419
			Right	10 Piece(s)	793418
	Roh	Untreated	Left	10 Piece(s)	793421
			Right	10 Piece(s)	793420
Clamp strip version 2	R01.5	Silver	Left	10 Piece(s)	793425
			Right	10 Piece(s)	793424
	R05.4	Dark bronze	Left	10 Piece(s)	793431
			Right	10 Piece(s)	793430
	R06.2M	Jet black, matt	Left	10 Piece(s)	793427
			Right	10 Piece(s)	793426
	R07.2	Traffic white	Left	10 Piece(s)	793429
			Right	10 Piece(s)	793428
	SF	Special colour	Left	10 Piece(s)	793433
			Right	10 Piece(s)	793432
	Roh	Untreated	Left	10 Piece(s)	793435
			Right	10 Piece(s)	793434
Clamp strip version 3	SF	Special colour	Left	10 Piece(s)	793437
			Right	10 Piece(s)	793436
	Roh	Untreated	Left	10 Piece(s)	793439
			Right	10 Piece(s)	793438

INFO
Untreated components for users who intend to paint the component themselves.

Contents:

[*]		#
[13]	Countersunk screw ST4.8 x 16; special head	3
[20]	Stay hinge, compl. | 160 kg	1
[21]	Countersunk screw M5 x 8	2
[22]	Stay bearing, compl. | 160 kg	1
[23]	Fixing connecting-link | 130 kg	1
[25]	Counter bearing	1
[28]	Corner hinge, compl. | 160 kg	1
[29]	Pivot rest, compl. | 160 kg	1
[31]	Pivot rest end cap	1
[33]	Fixing connecting-link | 160 kg	1

INFO
Only use bearings / clamp strips which have been approved for the profile. Information can be obtained from Roto sales representatives.

[*] T&T locking components set | 160 kg, accessible 1

			№
V.01	Left	1 Piece(s)	836205
	Right	1 Piece(s)	836199
V.02	Left	1 Piece(s)	836198
	Right	1 Piece(s)	836197

Contents:

[*]		#
[4]	Corner drive without blocking device, with retaining fork	1
[5]	Striker V.01 / V.02	1
[86]	Tilt striker (accessible)	2
[87]	Tilt lock bolt (accessible)	2
[90]	Run-up block sash component	1
[91]	Run-up block frame component	1

[18] Sash stay 1

				№
620	max. 160 kg	190	10 Piece(s)	793404

[19] Corner drive with blocking device and retaining fork 1

		№
Corner drive with blocking device and retaining fork	100 Piece(s)	490173

[*] CL corner drive set 1

Large packages → *from page 257*

		№
V.01	20 Piece(s)	728842
V.02	20 Piece(s)	728843

Contents:

[*]		#
[5]	Striker V.01 / V.02	2
[6]	Cam, insertable	2
[26]	Retaining fork	1
[27]	CL corner drive	1

[5] Striker 3

			Nº
V.01	9	100 Piece(s)	728918
V.02	9	100 Piece(s)	728920

[6] Cam, insertable 2

		Nº
Insertable	100 Piece(s)	334671

Espagnolette and connector

[*] T connector set 1

Alternatively:

[8a] Flush-encased gearbox 1 → *from page 272*

		Nº
AL T connector set	10 Piece(s)	728981

Contents:

[*]		
[8]	T connector	1
[9]	Cylinder screw M5 x 12	2

[10] Espagnolette support 1

			Nº
Espagnolette support	For Roto Line AL geared-handle	100 Piece(s)	331937

[11] Roto Line AL geared-handle 1

→ CTL_1

Alternatively:

[a] Window handle – standard 1 → CTL_1

Countersunk screw M5 x 30 2

[b] Handle without escutcheon 1 → CTL_1

Ring for handle without escutcheon 1

Mounting plate 1

Height-dependent components

[5] Striker

			Nº
V.01	9	100 Piece(s)	728918
V.02	9	100 Piece(s)	728920

≤ 2400	–
> 2400	2

[6] Cam, insertable

		Nº
Insertable	100 Piece(s)	334671

≤ 2400	–
> 2400	2

[39] Connecting rod, fixed, vertical (CR4) 1

→ *from page 274*

Width-dependent components

[*] T&T additional stay arm set | 160 kg[11]

			Nº
V.01	190	10 Piece(s)	728806
V.02	190	10 Piece(s)	728807

Contents:

[*]		#
[60]	Additional scissor stay arm, compl. V.01 / V.02	1
[61]	Retaining spring, compl.	1
[62]	Coupling rod	1
[63]	Scissor stay deadbolt	1
[64]	Scissor stay guide, compl. T&T | 130 kg	1
[65]	T&T stop | 130 kg	1

≤ 1300	–
> 1300	1

INFO
Tilt distance limited to 190 mm.

[11] Installation of the mishandling device on the corner drive / flush-encased gearbox is prescribed in accordance with DIN 18360 (German construction contract procedures (VOB)).

[5] Striker

			№
V.01	9	100 Piece(s)	728918
V.02	9	100 Piece(s)	728920

≤ 1300	–
> 1300	1

[6] Cam, insertable

		№
Insertable	100 Piece(s)	334671

≤ 1300	–
> 1300	1

[88] Striker (accessible)

		№
V.01 V.02	1 Piece(s)	821578

≤ 1300	–
> 1300	1

[89] Cam, insertable (accessible)

		№
17.5	1 Piece(s)	382986

≤ 1300	–
> 1300	1

4.1.9 T&T | accessible | RC 2 | 160 kg

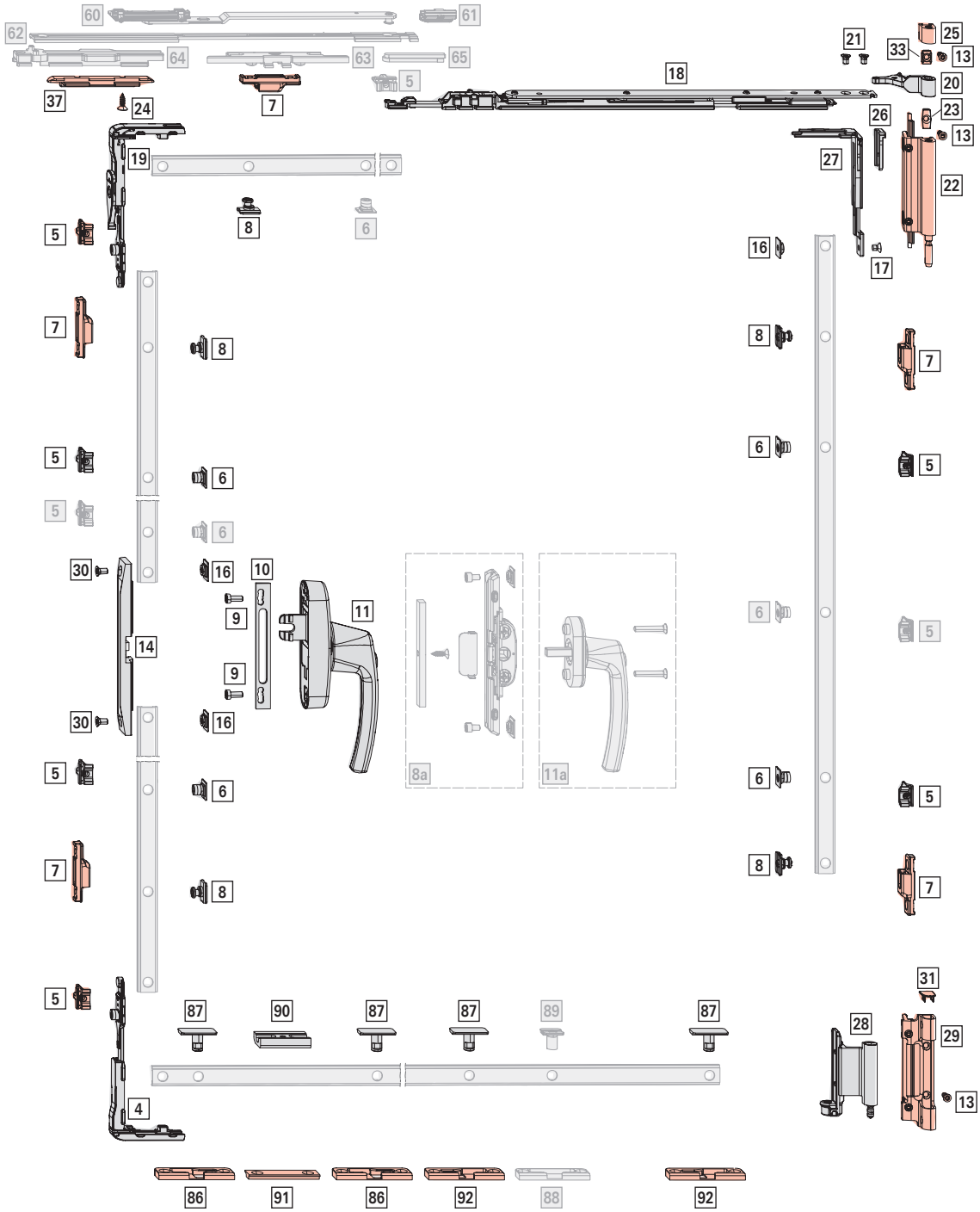

Application range

Sash width **SW**: 800 - 1300 mm

Sash height **SH**: 1800 - 2700 mm

Sash weight **S.kg**: max. 130 kg

Hinge passage **HP**: > 5

Basic set

[*] T&T / TF hinge side set | 160 kg 1

					№
Clamp strip version 1	R01.5	Silver	Left	10 Piece(s)	793411
			Right	10 Piece(s)	793410
	R05.4	Dark bronze	Left	10 Piece(s)	793417
			Right	10 Piece(s)	793416
	R06.2M	Jet black, matt	Left	10 Piece(s)	793413
			Right	10 Piece(s)	793412
	R07.2	Traffic white	Left	10 Piece(s)	793415
			Right	10 Piece(s)	793414
	SF	Special colour	Left	10 Piece(s)	793419
			Right	10 Piece(s)	793418
	Roh	Untreated	Left	10 Piece(s)	793421
			Right	10 Piece(s)	793420
Clamp strip version 2	R01.5	Silver	Left	10 Piece(s)	793425
			Right	10 Piece(s)	793424
	R05.4	Dark bronze	Left	10 Piece(s)	793431
			Right	10 Piece(s)	793430
	R06.2M	Jet black, matt	Left	10 Piece(s)	793427
			Right	10 Piece(s)	793426
	R07.2	Traffic white	Left	10 Piece(s)	793429
			Right	10 Piece(s)	793428
	SF	Special colour	Left	10 Piece(s)	793433
			Right	10 Piece(s)	793432
	Roh	Untreated	Left	10 Piece(s)	793435
			Right	10 Piece(s)	793434
Clamp strip version 3	SF	Special colour	Left	10 Piece(s)	793437
			Right	10 Piece(s)	793436
	Roh	Untreated	Left	10 Piece(s)	793439
			Right	10 Piece(s)	793438

INFO
Untreated components for users who intend to paint the component themselves.

Contents:

[*]		#
[13]	Countersunk screw ST4.8 x 16; special head	3
[20]	Stay hinge, compl. | 160 kg	1
[21]	Countersunk screw M5 x 8	2
[22]	Stay bearing, compl. | 160 kg	1
[23]	Fixing connecting-link | 130 kg	1
[25]	Counter bearing	1
[28]	Corner hinge, compl. | 160 kg	1
[29]	Pivot rest, compl. | 160 kg	1
[31]	Pivot rest end cap	1
[33]	Fixing connecting-link | 160 kg	1

INFO
Only use bearings / clamp strips which have been approved for the profile. Information can be obtained from Roto sales representatives.

[*] T&T locking components set | 160 kg, accessible 1

			№
V.01	Left	1 Piece(s)	836205
	Right	1 Piece(s)	836199
V.02	Left	1 Piece(s)	836198
	Right	1 Piece(s)	836197

Contents:

[*]		#
[4]	Corner drive without blocking device, with retaining fork	1
[5]	Striker V.01 / V.02	1
[86]	Tilt striker (accessible)	2
[87]	Tilt lock bolt (accessible)	2
[90]	Run-up block sash component	1
[91]	Run-up block frame component	1

[18] Sash stay 1

				№
620	max. 160 kg	190	10 Piece(s)	793404

[19] Corner drive with blocking device and retaining fork 1

		№
Corner drive with blocking device and retaining fork	100 Piece(s)	490173

[*] CL SEC corner drive set 1

Large packages → *from page 257*

		Nº
V.01 V.02	10 Piece(s)	728944

[*]		#
[16]	SEC connector	1
[17]	Countersunk screw M5 x 7	1
[26]	SEC retaining fork	1
[27]	CL SEC corner drive	1

[*] SEC rebate-clearance reduction set — 1

Large packages → *from page 275*

			Nº
SEC rebate-clearance reduction set	For corner drives	10 Piece(s)	728950

[*]		#
[24]	Countersunk screw ST4.8 x 16	1
[37]	SEC rebate-clearance reduction CD	1

[7] SEC striker — 5

			Nº
V.01	9	100 Piece(s)	212637
V.02	9	100 Piece(s)	212638

[8] SEC cam RC 2 — 5

		Nº
Insertable	100 Piece(s)	447245

[5] Striker — 5

			Nº
V.01	9	100 Piece(s)	728918
V.02	9	100 Piece(s)	728920

[6] Cam, insertable — 4

		Nº
Insertable	100 Piece(s)	334671

[87] Tilt lock bolt (accessible) — 2

		Nº
19.5	1 Piece(s)	836208

[92] SEC striker (accessible) — 2

		Nº
Left	1 Piece(s)	819383
Right	1 Piece(s)	819382

Espagnolette and connector

[*] SEC espagnolette protection set — 1

Large packages → *from page 271*

Alternatively:

[8a] SEC flush-encased gearbox set — 1 → *from page 282*

		Nº
SEC espagnolette protection set	10 Piece(s)	728952

Contents:

[*]		#
[14]	SEC espagnolette protection	1
[16]	SEC connector	2
[30]	Countersunk screw M5 x 10	2

[9] Cylinder screw M5 x 12 — 2

			Nº
Cylinder screw	M5x12	100 Piece(s)	728925

[10] Espagnolette support — 1

			Nº
Espagnolette support	For Roto Line AL geared-handle	100 Piece(s)	331937

[11] Roto Line AL geared-handle, lockable — 1

→ CTL_1

Alternatively:

[a] Window handle – standard, lockable — 1 → CTL_1

Countersunk screw M5 x 30 — 2

Height-dependent components

[5] Striker

			Nº
V.01	9	100 Piece(s)	728918
V.02	9	100 Piece(s)	728920

≤ 2400	–
> 2400	2

[6] Cam, insertable

		Nº
Insertable	100 Piece(s)	334671

≤ 2400	–
> 2400	2

Width-dependent components

[*] T&T additional stay arm set | 160 kg[12]

			Nº
V.01	190	10 Piece(s)	728806
V.02	190	10 Piece(s)	728807

Contents:

[*]		#
[60]	Additional scissor stay arm, compl. V.01 / V.02	1
[61]	Retaining spring, compl.	1
[62]	Coupling rod	1
[63]	Scissor stay deadbolt	1
[64]	Scissor stay guide, compl. T&T | 130 kg	1
[65]	T&T stop | 130 kg	1

≤ 1300	–
> 1300	1

INFO
Tilt distance limited to 190 mm.

[5] Striker

			Nº
V.01	9	100 Piece(s)	728918
V.02	9	100 Piece(s)	728920

≤ 1300	–
> 1300	1

[6] Cam, insertable

		Nº
Insertable	100 Piece(s)	334671

≤ 1300	–
> 1300	1

[88] Striker (accessible)

		Nº
V.01 V.02	1 Piece(s)	821578

≤ 1300	–
> 1300	1

[89] Cam, insertable (accessible)

		Nº
17.5	1 Piece(s)	382986

≤ 1300	–
> 1300	1

[12] Installation of the mishandling device on the corner drive / flush-encased gearbox is prescribed in accordance with DIN 18360 (German construction contract procedures (VOB)).

4.1.10 T&T | 200 kg

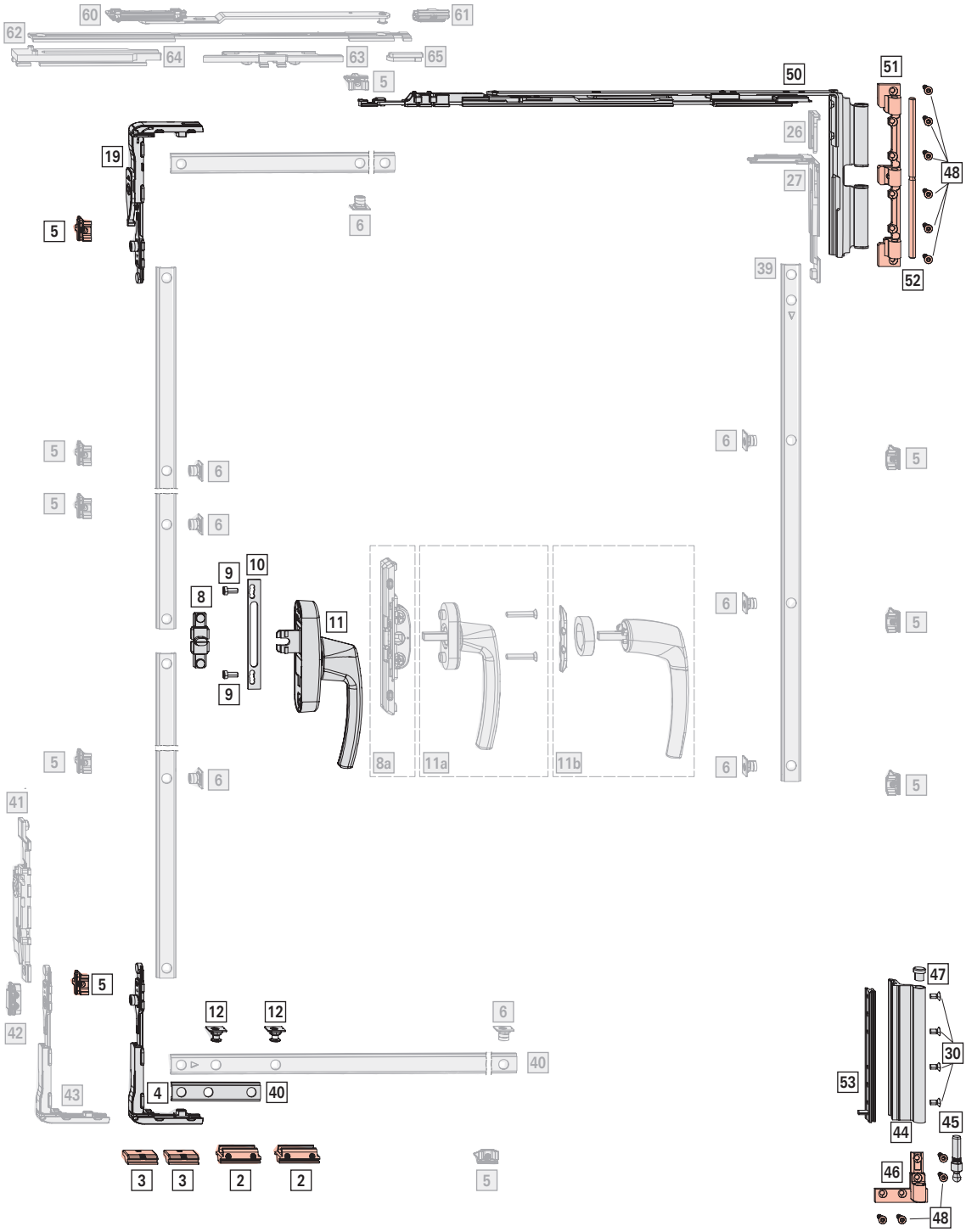

Application range

Sash width **SW**: 640 - 1600 mm

Sash height **SH**: 1100 - 3000 mm

Sash weight **S.kg**: max. 200 kg

Hinge passage **HP**: > 7 mm

Basic set

[*] T&T hinge side set | 200 kg 1

				№
SF	Special colour	Left	10 Piece(s)	775003
		Right	10 Piece(s)	775002

Contents:

[*]		#
[30]	Countersunk screw M5 x 10	4
[44]	Corner hinge | 200 kg	1
[45]	Pivot-rest pin | 200 kg	1
[46]	Pivot rest, compl. | 200 kg	1
[47]	Corner hinge end cap (colour can be selected)	2
[48]	Countersunk screw ST4.8 x 19	10
[50]	Sash stay 640 (tilt distance 190 mm)	1
[51]	Stay bearing | 200 kg	1
[52]	Bearing pin | 200 kg	1
[53]	Clamping support-strip with pin | 200 kg	1

[*] T&T / TF locking components set; SW ≤ 1300 mm 1

		№
V.01	10 Piece(s)	793475
V.02	10 Piece(s)	793476

Contents:

[*]		#
[2]	TF tilt striker	2
[3]	Run-up wedge V.01 / V.02	2
[4]	Corner drive without blocking device, with retaining fork	1
[5]	Striker V.01 / V.02	2
[12]	TF tilt lock bolt	2
[19]	Corner drive with blocking device and retaining fork	1

[*] T&T / TF locking components set; SW > 1300 mm 1

		№
V.01	10 Piece(s)	775009
V.02	10 Piece(s)	775010

Contents:

[*]		#
[2]	TF tilt striker	2
[3]	Run-up wedge V.01 / V.02	2
[5]	Striker V.01 / V.02	2
[12]	TF tilt lock bolt	2
[19]	Corner drive with blocking device and retaining fork	1
[43]	Corner drive for sash lifter with retaining fork	1

[*] Sash lifter set; SW > 1300 mm 1

		№
Left	20 Piece(s)	775021
Right	20 Piece(s)	775020

[*]		#
[41]	Coupler component with run-up block	1
[42]	Stop	1

[40] Connecting rod, fixed, horizontal, bottom (CR5)

→ *from page 274*

Espagnolette and connector

[*] T connector set 1

Alternatively:

[8a] Flush-encased gearbox 1 → *from page 272*

		№
AL T connector set	10 Piece(s)	728981

Contents:

[*]		
[8]	T connector	1
[9]	Cylinder screw M5 x 12	2

[10] Espagnolette support 1

			№
Espagnolette support	For Roto Line AL geared-handle	100 Piece(s)	331937

[11] Roto Line AL geared-handle 1

→ CTL_1

Alternatively:

[a] Window handle – standard 1 → CTL_1

Countersunk screw M5 x 30 2

[b] Handle without escutcheon 1 → CTL_1

Ring for handle without escutcheon 1

Mounting plate 1

Height-dependent components

[*] CL corner drive set

Large packages → *from page 257*		
		№
V.01	20 Piece(s)	728842
V.02	20 Piece(s)	728843

Contents:

[*]		#
[5]	Striker V.01 / V.02	2
[6]	Cam, insertable	2
[26]	Retaining fork	1
[27]	CL corner drive	1

≤ 1300	–
> 1300	1

[5] Striker

			№
V.01	9	100 Piece(s)	728918
V.02	9	100 Piece(s)	728920

≤ 1800	–
1801 – 2400	2
> 2400	4

[6] Cam, insertable

		№
Insertable	100 Piece(s)	334671

≤ 1800	–
1801 – 2400	2
> 2400	4

[39] Connecting rod, fixed, vertical (CR4) 1

→ *from page 274*

Width-dependent components

[*] T&T additional stay arm set | 200 kg[13]

			№
V.01	190	10 Piece(s)	791638
V.02	190	10 Piece(s)	791639

Contents:

[*]		#
[60]	Additional scissor stay arm, compl. V.01 / V.02	1
[61]	Retaining spring, compl.	1
[62]	Coupling rod	1
[63]	Scissor stay deadbolt	1
[64]	Scissor stay guide, compl. T&T | 200 kg	1
[65]	T&T stop | 200 kg	1

≤ 1300	–
> 1300	1

INFO
Tilt distance limited to 190 mm.

[5] Striker

			№
V.01	9	100 Piece(s)	728918
V.02	9	100 Piece(s)	728920

≤ 1300	–
> 1300	2

[6] Cam, insertable

		№
Insertable	100 Piece(s)	334671

≤ 1300	–
> 1300	2

[13] Installation of the mishandling device on the corner drive / flush-encased gearbox is prescribed in accordance with DIN 18360 (German construction contract procedures (VOB)).

4.1.11 T&T | RC 2 | 200 kg

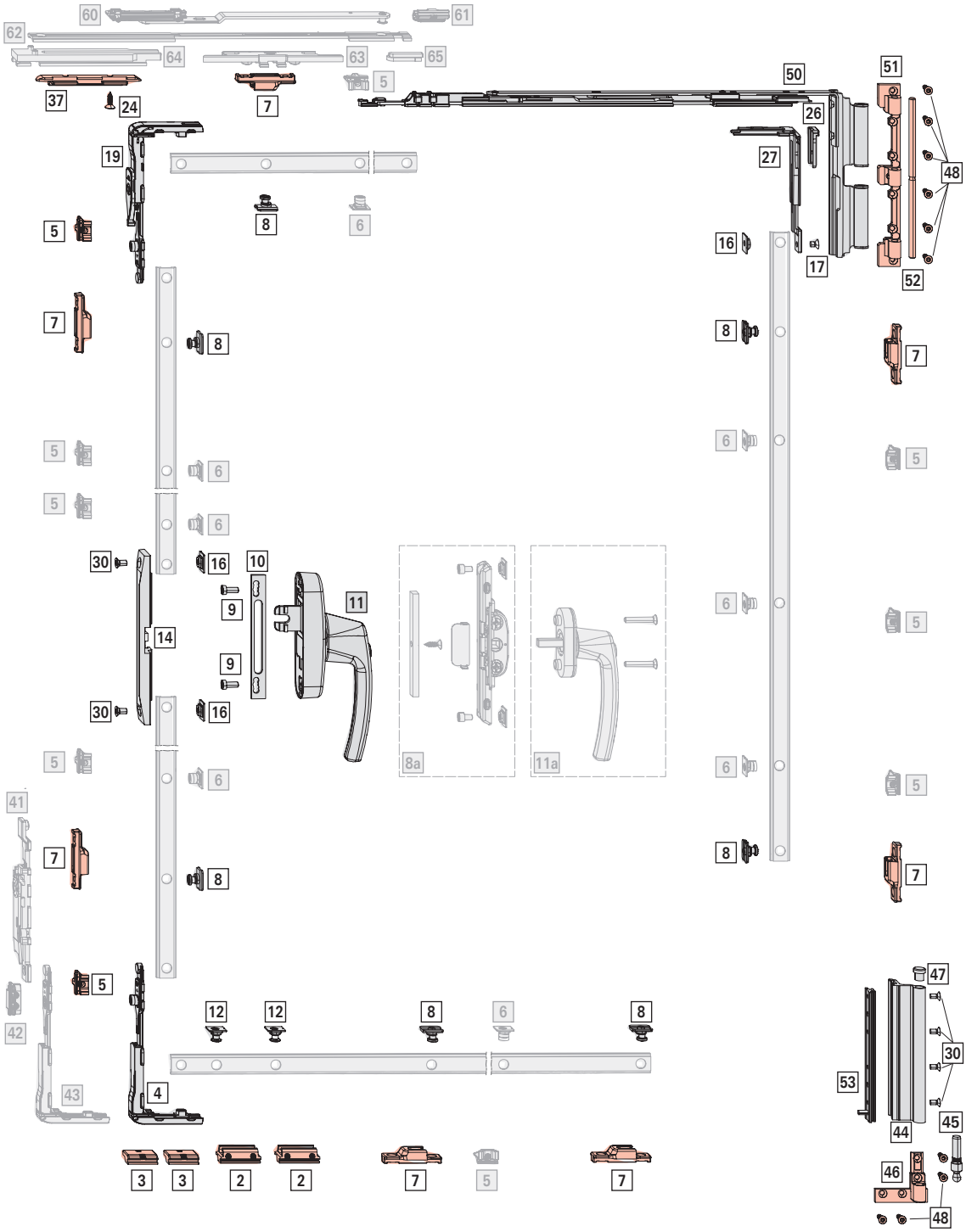

Application range

Sash width **SW**: 730 - 1600 mm

Sash height **SH**: 1100 - 3000 mm

Sash weight **S.kg**: max. 200 kg

Hinge passage **HP**: > 7 mm

Basic set

[*] T&T hinge side set | 200 kg — 1

				№
SF	Special colour	Left	10 Piece(s)	775003
		Right	10 Piece(s)	775002

Contents:

[*]		#
[30]	Countersunk screw M5 x 10	4
[44]	Corner hinge | 200 kg	1
[45]	Pivot-rest pin | 200 kg	1
[46]	Pivot rest, compl. | 200 kg	1
[47]	Corner hinge end cap (colour can be selected)	2
[48]	Countersunk screw ST4.8 x 19	10
[50]	Sash stay 640 (tilt distance 190 mm)	1
[51]	Stay bearing | 200 kg	1
[52]	Bearing pin | 200 kg	1
[53]	Clamping support-strip with pin | 200 kg	1

[*] T&T / TF locking components set; SW ≤ 1300 mm — 1

		№
V.01	10 Piece(s)	793475
V.02	10 Piece(s)	793476

Contents:

[*]		#
[2]	TF tilt striker	2
[3]	Run-up wedge V.01 / V.02	2
[4]	Corner drive without blocking device, with retaining fork	1
[5]	Striker V.01 / V.02	2
[12]	TF tilt lock bolt	2
[19]	Corner drive with blocking device and retaining fork	1

[*] T&T / TF locking components set; SW > 1300 mm — 1

		№
V.01	10 Piece(s)	775009
V.02	10 Piece(s)	775010

Contents:

[*]		#
[2]	TF tilt striker	2
[3]	Run-up wedge V.01 / V.02	2
[5]	Striker V.01 / V.02	2
[12]	TF tilt lock bolt	2
[19]	Corner drive with blocking device and retaining fork	1
[43]	Corner drive for sash lifter with retaining fork	1

[*] Sash lifter set; SW > 1300 mm — 1

INFO
Perform a system assessment when using the sash lifter set. Further information can be obtained from Roto sales representatives.

		№
Left	20 Piece(s)	775021
Right	20 Piece(s)	775020

[*]		#
[41]	Coupler component with run-up block	1
[42]	Stop	1

[*] CL SEC corner drive set — 1

Large packages → *from page 257*

		№
V.01 V.02	10 Piece(s)	728944

[*]		#
[16]	SEC connector	1
[17]	Countersunk screw M5 x 7	1
[26]	SEC retaining fork	1
[27]	CL SEC corner drive	1

[*] SEC rebate-clearance reduction set — 1

Large packages → *from page 275*

			№
SEC rebate-clearance reduction set	For corner drives	10 Piece(s)	728950

[*]		#
[24]	Countersunk screw ST4.8 x 16	1
[37]	SEC rebate-clearance reduction CD	1

[7] SEC striker — 7

			№
V.01	9	100 Piece(s)	212637
V.02	9	100 Piece(s)	212638

[8]	SEC cam	RC 2	7
			№
Insertable	100 Piece(s)		447245

Espagnolette and connector

[*]	SEC espagnolette protection set		1
	Large packages		→ *from page 271*
	Alternatively:		
[8a]	SEC flush-encased gearbox set	1	→ *from page 282*
			№
SEC espagnolette protection set		10 Piece(s)	728952

Contents:

[*]		#
[14]	SEC espagnolette protection	1
[16]	SEC connector	2
[30]	Countersunk screw M5 x 10	2

[9]	Cylinder screw M5 x 12		2
			№
Cylinder screw	M5x12	100 Piece(s)	728925

[10]	Espagnolette support		1
			№
Espagnolette support	For Roto Line AL geared-handle	100 Piece(s)	331937

[11]	Roto Line AL geared-handle, lockable		1 → CTL_1
	Alternatively:		
[a]	Window handle – standard, lockable	1	→ CTL_1
	Countersunk screw M5 x 30	2	

Height-dependent components

[5]	Striker		
			№
V.01	9	100 Piece(s)	728918
V.02	9	100 Piece(s)	728920

≤ 1300	–
1301 – 1800	2
1801 – 2400	4
> 2400	6

[6]	Cam, insertable	
		№
Insertable	100 Piece(s)	334671

≤ 1300	–
1301 – 1800	2
1801 – 2400	4
> 2400	6

Width-dependent components

[*]	T&T additional stay arm set | 200 kg[14]		
			№
V.01	190	10 Piece(s)	791638
V.02	190	10 Piece(s)	791639

Contents:

[*]		#
[60]	Additional scissor stay arm, compl. V.01 / V.02	1
[61]	Retaining spring, compl.	1
[62]	Coupling rod	1
[63]	Scissor stay deadbolt	1
[64]	Scissor stay guide, compl. T&T | 200 kg	1
[65]	T&T stop | 200 kg	1

≤ 1300	–
> 1300	1

INFO
Tilt distance limited to 190 mm.

[5]	Striker		
			№
V.01	9	100 Piece(s)	728918
V.02	9	100 Piece(s)	728920

≤ 1300	–
> 1300	2

[6]	Cam, insertable	
		№
Insertable	100 Piece(s)	334671

≤ 1300	–
> 1300	2

[14] Installation of the mishandling device on the corner drive / flush-encased gearbox is prescribed in accordance with DIN 18360 (German construction contract procedures (VOB)).

4.1.12 T&T | RC 3 | 200 kg

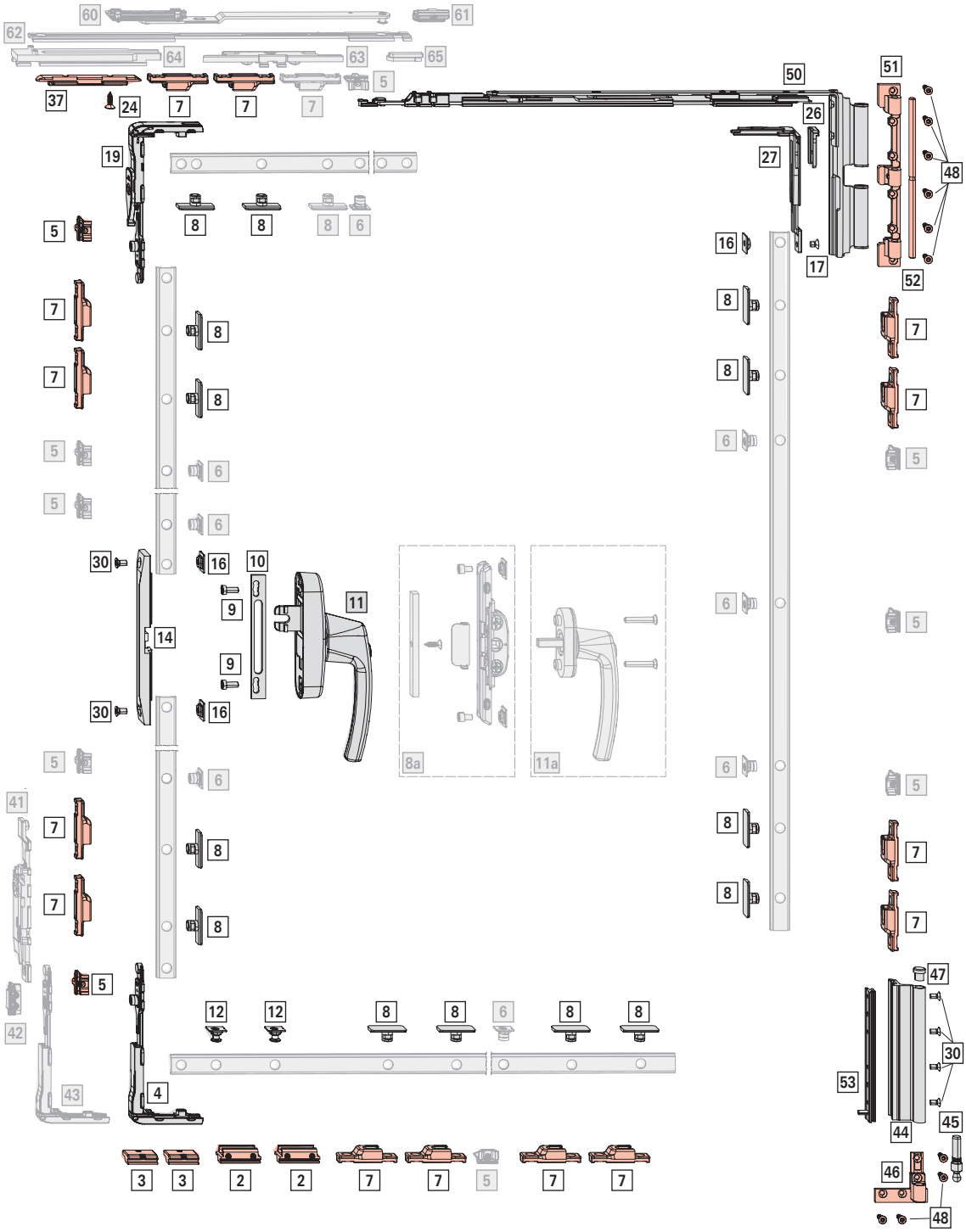

Application range

Sash width **SW**: 815 - 1600 mm

Sash height **SH**: 1100 - 3000 mm

Sash weight **S.kg**: max. 200 kg

Hinge passage **HP**: > 7 mm

Basic set

[*] T&T hinge side set | 200 kg — 1

				Nº
SF	Special colour	Left	10 Piece(s)	775003
		Right	10 Piece(s)	775002

Contents:

[*]		#
[30]	Countersunk screw M5 x 10	4
[44]	Corner hinge | 200 kg	1
[45]	Pivot-rest pin | 200 kg	1
[46]	Pivot rest, compl. | 200 kg	1
[47]	Corner hinge end cap (colour can be selected)	2
[48]	Countersunk screw ST4.8 x 19	10
[50]	Sash stay 640 (tilt distance 190 mm)	1
[51]	Stay bearing | 200 kg	1
[52]	Bearing pin | 200 kg	1
[53]	Clamping support-strip with pin | 200 kg	1

INFO
When installing a turn restrictor, note the changed minimum sash widths → *from page 50*.

[*] T&T / TF locking components set; SW ≤ 1300 mm — 1

		Nº
V.01	10 Piece(s)	793475
V.02	10 Piece(s)	793476

Contents:

[*]		#
[2]	TF tilt striker	2
[3]	Run-up wedge V.01 / V.02	2
[4]	Corner drive without blocking device, with retaining fork	1
[5]	Striker V.01 / V.02	2
[12]	TF tilt lock bolt	2
[19]	Corner drive with blocking device and retaining fork	1

[*] T&T / TF locking components set; SW > 1300 mm — 1

		Nº
V.01	10 Piece(s)	775009
V.02	10 Piece(s)	775010

Contents:

[*]		#
[2]	TF tilt striker	2
[3]	Run-up wedge V.01 / V.02	2
[5]	Striker V.01 / V.02	2
[12]	TF tilt lock bolt	2
[19]	Corner drive with blocking device and retaining fork	1
[43]	Corner drive for sash lifter with retaining fork	1

[*] Sash lifter set; SW > 1300 mm — 1

INFO
Perform a system assessment when using the sash lifter set. Further information can be obtained from Roto sales representatives.

		Nº
Left	20 Piece(s)	775021
Right	20 Piece(s)	775020

[*]		#
[41]	Coupler component with run-up block	1
[42]	Stop	1

[*] CL SEC corner drive set — 1

Large packages → *from page 257*

		Nº
V.01 V.02	10 Piece(s)	728944

[*]		#
[16]	SEC connector	1
[17]	Countersunk screw M5 x 7	1
[26]	SEC retaining fork	1
[27]	CL SEC corner drive	1

[*] SEC rebate-clearance reduction set — 1

Large packages → *from page 275*

			Nº
SEC rebate-clearance reduction set	For corner drives	10 Piece(s)	728950

[*]		#
[24]	Countersunk screw ST4.8 x 16	1
[37]	SEC rebate-clearance reduction CD	1

[7] SEC striker			14
V.01	9	100 Piece(s)	212637
V.02	9	100 Piece(s)	212638

[8] SEC cam	RC 3	14
Insertable	100 Piece(s)	443530

Espagnolette and connector

[*]	SEC espagnolette protection set		1
	Large packages		→ *from page 271*
	Alternatively:		
[8a]	SEC flush-encased gearbox set	1	→ *from page 282*
SEC espagnolette protection set		10 Piece(s)	728952

Contents:

[*]		#
[14]	SEC espagnolette protection	1
[16]	SEC connector	2
[30]	Countersunk screw M5 x 10	2

[9] Cylinder screw M5 x 12			2
Cylinder screw	M5x12	100 Piece(s)	728925

[10] Espagnolette support			1
Espagnolette support	For Roto Line AL geared-handle	100 Piece(s)	331937

[11]	Roto Line AL geared-handle, lockable		1 → CTL_1
	Alternatively:		
[a]	Window handle – standard, lockable	1	→ CTL_1
	Countersunk screw M5 x 30	2	

Height-dependent components

[5] Striker			
V.01	9	100 Piece(s)	728918
V.02	9	100 Piece(s)	728920

≤ 1300	–
1301 – 1800	2
1801 – 2400	4
> 2400	6

[6] Cam, insertable		
Insertable	100 Piece(s)	334671

≤ 1300	–
1301 – 1800	2
1801 – 2400	4
> 2400	6

Width-dependent components

[*] T&T additional stay arm set | 200 kg[15]			
V.01	190	10 Piece(s)	791638
V.02	190	10 Piece(s)	791639

Contents:

[*]		#
[60]	Additional scissor stay arm, compl. V.01 / V.02	1
[61]	Retaining spring, compl.	1
[62]	Coupling rod	1
[63]	Scissor stay deadbolt	1
[64]	Scissor stay guide, compl. T&T | 200 kg	1
[65]	T&T stop | 200 kg	1

≤ 1300	–
> 1300	1

INFO
Tilt distance limited to 190 mm.

[15] Installation of the mishandling device on the corner drive / flush-encased gearbox is prescribed in accordance with DIN 18360 (German construction contract procedures (VOB)).

[5] Striker

			№
V.01	9	100 Piece(s)	728918
V.02	9	100 Piece(s)	728920

≤ 1300	–
> 1300	2

[6] Cam, insertable

		№
Insertable	100 Piece(s)	334671

≤ 1300	–
> 1300	2

[7] SEC striker

			№
V.01	9	100 Piece(s)	212637
V.02	9	100 Piece(s)	212638

≤ 1300	–
> 1300	1

[8] SEC cam RC 3

		№
Insertable	100 Piece(s)	443530

≤ 1300	–
> 1300	1

4.2 TiltFirst hardware

4.2.1 TF | 90 -130 kg

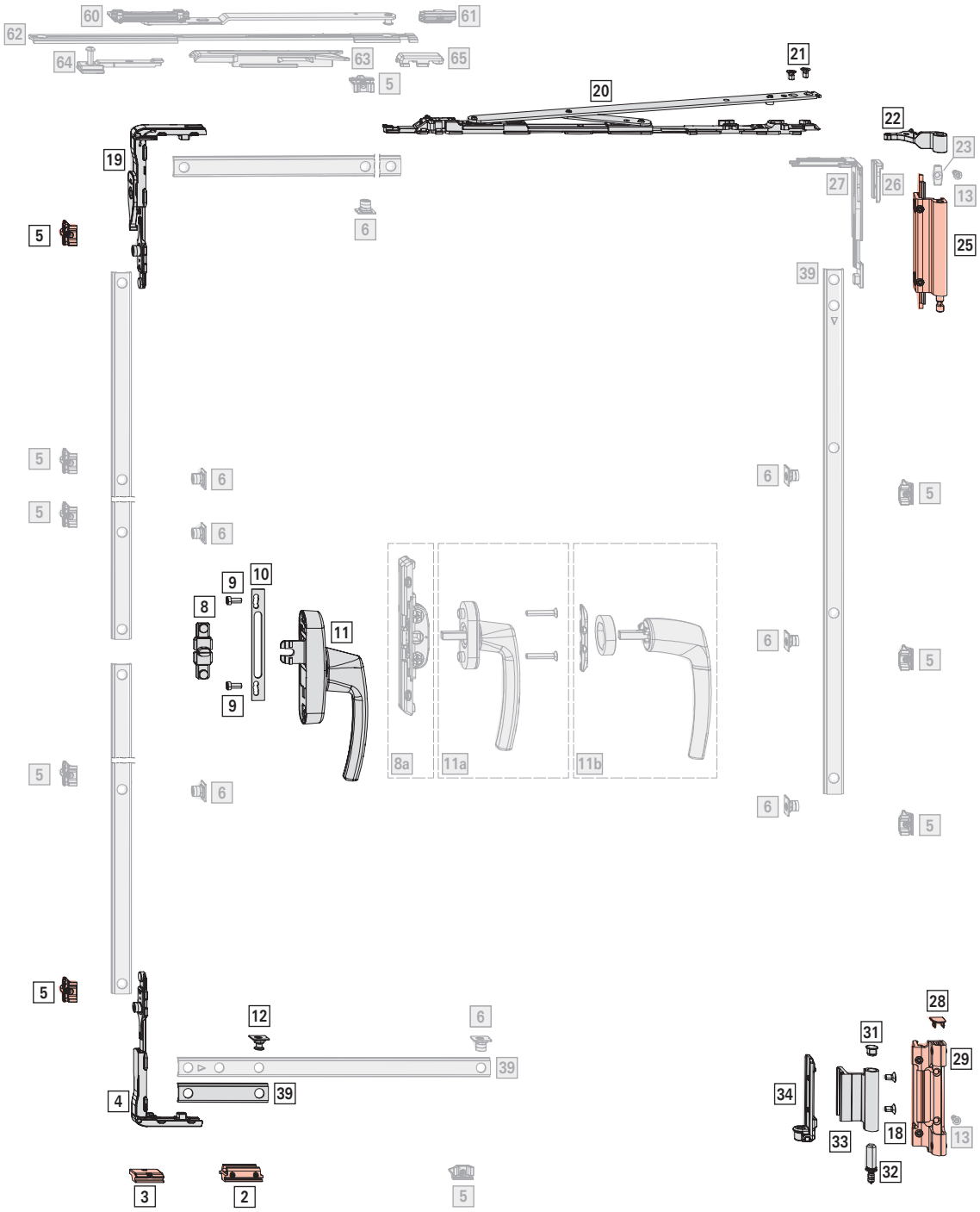

Application range

Sash width **SW**: 405 - 1600 mm

Sash height **SH**: 520 - 3000 mm

Sash weight **S.kg**: max. 130 kg

Hinge passage **HP**: > 3.5 / > 5 mm

Basic set

[*] T&T / TF hinge side set | 90 kg; 1
SH ≤ 2700 mm; HP 3.5 mm
Large packages → *from page 257*

				№
Clamp strip version 1	R01.5	Silver	20 Piece(s)	728787
	R05.4	Dark bronze	10 Piece(s)	728788
	R06.2	Jet black	10 Piece(s)	728789
	R07.2	Traffic white	10 Piece(s)	728790
	SF	Special colour	10 Piece(s)	728791
Clamp strip version 2	R01.5	Silver	10 Piece(s)	728792
	R05.4	Dark bronze	10 Piece(s)	728793
	R06.2	Jet black	10 Piece(s)	728794
	R07.2	Traffic white	10 Piece(s)	728795
	SF	Special colour	10 Piece(s)	728796
Clamp strip version 3	SF	Special colour	10 Piece(s)	728797

Contents:

[*]		#
[18]	Countersunk screw M5 x 9	2
[21]	Countersunk screw M5 x 8	2
[22]	Stay hinge, compl.	1
[25]	Stay bearing, compl.	1
[28]	Pivot rest end cap	1
[29]	Pivot rest, compl.	1
[31]	Corner hinge end cap	1
[32]	Pivot-rest pin	1
[33]	Corner hinge	1
[34]	Clampable corner bracket, compl.	1

INFO
Only use bearings / clamp strips which have been approved for the profile. Information can be obtained from Roto sales representatives.

[*] T&T / TF hinge side set | 90 kg; 1
SH > 2700 mm, HP 5 mm
Using the rivet nut set → *from page 288*

					№
Clamp strip version 1	SF	Special colour	20 Piece(s)	Left	834400
	SF	Special colour	20 Piece(s)	Right	834399
Clamp strip version 2	SF	Special colour	20 Piece(s)	Left	834156
	SF	Special colour	20 Piece(s)	Right	834155

Contents:

[*]		#
[22]	Stay hinge, compl.	1
[25]	Stay bearing, compl.	1
[28]	Pivot rest end cap	1
[29]	Pivot rest, compl.	1
[31]	Corner hinge end cap	1
	Corner hinge, reinforced	1
	Small parts set	1

[*] TF locking components set 1

		№
V.01	10 Piece(s)	728976
V.02	10 Piece(s)	728977

Contents:

[*]		#
[2]	TF tilt striker	1
[3]	Run-up wedge V.01 / V.02	1
[4]	Corner drive without blocking device, with retaining fork	1
[5]	Striker V.01 / V.02	2
[12]	TF tilt lock bolt	1
[19]	Corner drive with blocking device and retaining fork	1

[20] Sash stay 1

				№
400	max. 100 kg	160	10 Piece(s)	728969
600	max. 130 kg	160	10 Piece(s)	728970

≤ 600	400
> 600	600

[40] Connecting rod, fixed, horizontal, bottom (CR5)
→ *from page 274*

Espagnolette and connector

[*] T connector set 1
Alternatively:
[8a] Flush-encased gearbox 1 → *from page 272*

		№
AL T connector set	10 Piece(s)	728981

Contents:

[*]		
[8]	T connector	1
[9]	Cylinder screw M5 x 12	2

[10] Espagnolette support 1

			№
Espagnolette support	For Roto Line AL geared-handle	100 Piece(s)	331937

[11]	**Roto Line AL geared-handle**	1	→ CTL_1
	Alternatively:		
[a]	Window handle – standard	1	→ CTL_1
	Countersunk screw M5 x 30	2	
[b]	Handle without escutcheon	1	→ CTL_1
	Ring for handle without escutcheon	1	
	Mounting plate	1	

Height-dependent components

[*] CL corner drive set
Large packages → *from page 257*

		№
V.01	20 Piece(s)	728842
V.02	20 Piece(s)	728843

Contents:

[*]		#
[5]	Striker V.01 / V.02	2
[6]	Cam, insertable	2
[26]	Retaining fork	1
[27]	CL corner drive	1

≤ 1300	–
> 1300	1

[5] Striker

			№
V.01	9	100 Piece(s)	728918
V.02	9	100 Piece(s)	728920

≤ 1800	–
1801 – 2400	2
> 2400	4

[6] Cam, insertable

		№
Insertable	100 Piece(s)	334671

≤ 1800	–
1801 – 2400	2
> 2400	4

[13] Countersunk screw ST4.8 x 16; special head, as an additional means of securing the pivot rest

Alternatively for thread engagement ≤ 6 mm:
Rivet nut set, metric → *from page 288*

			№
Countersunk screw	ST4,8x16	100 Piece(s)	728933

≤ 2400	–
> 2400	1

[39] Connecting rod, fixed, vertical (CR4) 1
→ *from page 274*

Width-dependent components

[*] TF additional stay arm set | 130 kg[16]; SW > 1300 mm

			№
V.01	160	10 Piece(s)	728978
V.02	160	10 Piece(s)	728979

Contents:

[*]		#
[60]	Additional scissor stay arm, compl. V.01 / V.02	1
[61]	Retaining spring, compl.	1
[62]	Coupling rod	1
[63]	Scissor stay guide, compl. TF	1
[64]	Additional stay arm stop, compl. TF | 130 kg	1
[65]	Coupler component, compl.	1

≤ 1300	–
> 1300	1

INFO
Tilt distance limited to 160 mm.

[5] Striker

			№
V.01	9	100 Piece(s)	728918
V.02	9	100 Piece(s)	728920

≤ 1300	–
> 1300	2

[16] Installation of the mishandling device on the corner drive / flush-encased gearbox is prescribed in accordance with DIN 18360 (German construction contract procedures (VOB)).

[6]	Cam, insertable	
		№
Insertable	100 Piece(s)	334671

≤ 1300	–
> 1300	2

Weight-dependent components

[*]	**Upgrade set | 130 kg**; S.kg > 90 kg	1
		№
max. 130 kg	10 Piece(s)	728695

Contents:

[*]		#
[13]	Countersunk screw ST4.8 x 16; special head	1
[23]	Fixing connecting-link | 130 kg	1

4.2.2 TF | RC 2 | 90 - 130 kg

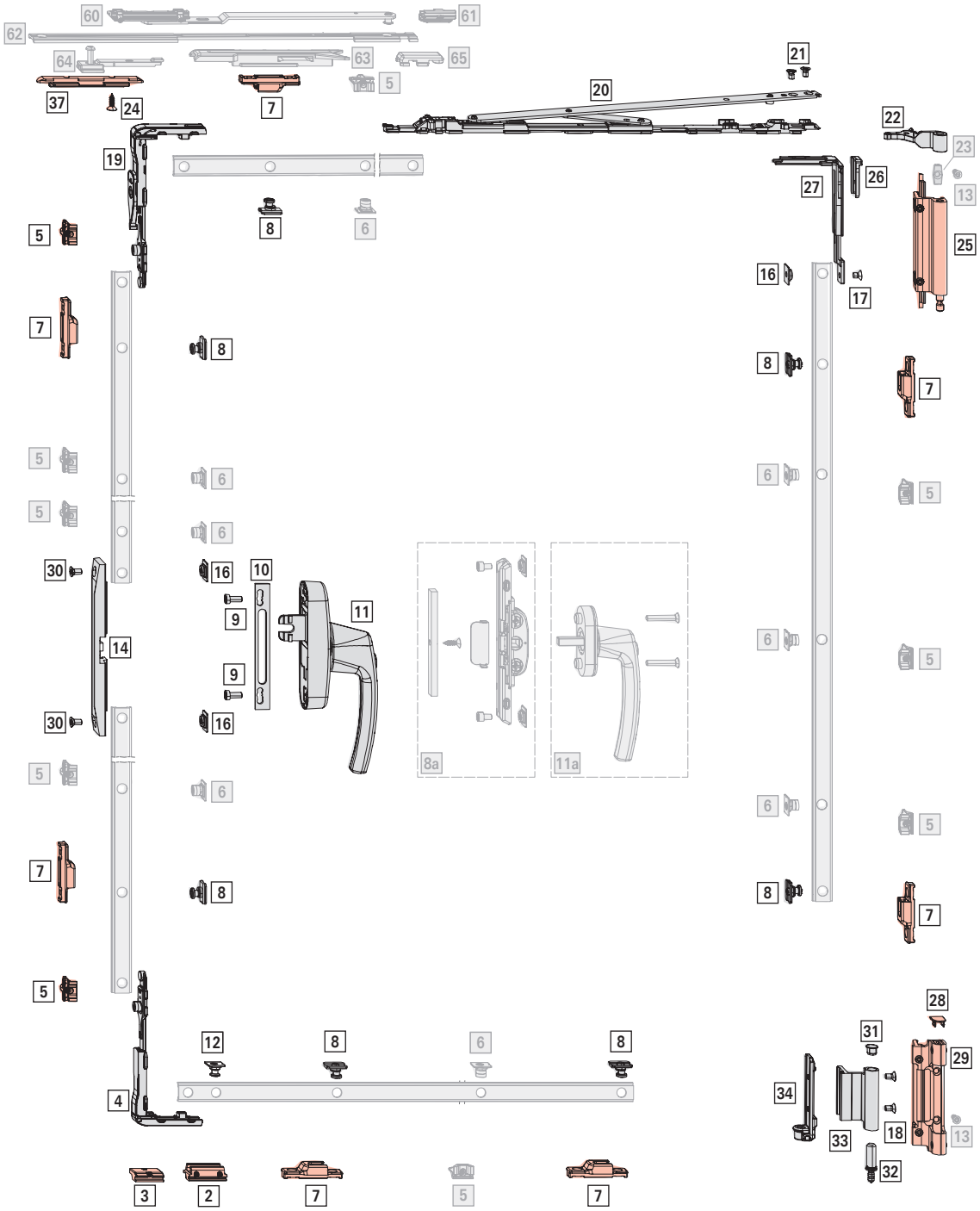

Application range

Sash width **SW**: 530 - 1600 mm

Sash height **SH**: 770 - 3000 mm

Sash weight **S.kg**: max. 130 kg

Hinge passage **HP**: > 3.5 / > 5 mm

Basic set

[*] T&T / TF hinge side set | 90 kg; 1
SH ≤ 2700 mm; HP 3.5 mm
Large packages → *from page 257*

				№
Clamp strip version 1	R01.5	Silver	20 Piece(s)	728787
	R05.4	Dark bronze	10 Piece(s)	728788
	R06.2	Jet black	10 Piece(s)	728789
	R07.2	Traffic white	10 Piece(s)	728790
	SF	Special colour	10 Piece(s)	728791
Clamp strip version 2	R01.5	Silver	10 Piece(s)	728792
	R05.4	Dark bronze	10 Piece(s)	728793
	R06.2	Jet black	10 Piece(s)	728794
	R07.2	Traffic white	10 Piece(s)	728795
	SF	Special colour	10 Piece(s)	728796
Clamp strip version 3	SF	Special colour	10 Piece(s)	728797

Contents:

[*]		#
[18]	Countersunk screw M5 x 9	2
[21]	Countersunk screw M5 x 8	2
[22]	Stay hinge, compl.	1
[25]	Stay bearing, compl.	1
[28]	Pivot rest end cap	1
[29]	Pivot rest, compl.	1
[31]	Corner hinge end cap	1
[32]	Pivot-rest pin	1
[33]	Corner hinge	1
[34]	Clampable corner bracket, compl.	1

INFO
Only use bearings / clamp strips which have been approved for the profile. Information can be obtained from Roto sales representatives.

[*] T&T / TF hinge side set | 90 kg; 1
SH > 2700 mm, HP 5 mm
Using the rivet nut set → *from page 288*

					№
Clamp strip version 1	SF	Special colour	20 Piece(s)	Left	834400
	SF	Special colour	20 Piece(s)	Right	834399
Clamp strip version 2	SF	Special colour	20 Piece(s)	Left	834156
	SF	Special colour	20 Piece(s)	Right	834155

Contents:

[*]		#
[22]	Stay hinge, compl.	1
[25]	Stay bearing, compl.	1
[28]	Pivot rest end cap	1
[29]	Pivot rest, compl.	1
[31]	Corner hinge end cap	1
	Corner hinge, reinforced	1
	Small parts set	1

[*] TF locking components set 1

		№
V.01	10 Piece(s)	728976
V.02	10 Piece(s)	728977

Contents:

[*]		#
[2]	TF tilt striker	1
[3]	Run-up wedge V.01 / V.02	1
[4]	Corner drive without blocking device, with retaining fork	1
[5]	Striker V.01 / V.02	2
[12]	TF tilt lock bolt	1
[19]	Corner drive with blocking device and retaining fork	1

[20] Sash stay 1

				№
400	max. 100 kg	160	10 Piece(s)	728969
600	max. 130 kg	160	10 Piece(s)	728970

≤ 624	400
> 625	600

[*] CL SEC corner drive set 1
Large packages → *from page 257*

		№
V.01 V.02	10 Piece(s)	728944

[*]		#
[16]	SEC connector	1
[17]	Countersunk screw M5 x 7	1
[26]	SEC retaining fork	1
[27]	CL SEC corner drive	1

[*] SEC rebate-clearance reduction set 1

Large packages → *from page 275*			
			№
SEC rebate-clearance reduction set	For corner drives	10 Piece(s)	728950

[*]		#
[24]	Countersunk screw ST4.8 x 16	1
[37]	SEC rebate-clearance reduction CD	1

[7]	**SEC striker**			7
				№
V.01	9	100 Piece(s)		212637
V.02	9	100 Piece(s)		212638

[8]	**SEC cam**	**RC 2**	7
			№
Insertable		100 Piece(s)	447245

Espagnolette and connector

[*]	**SEC espagnolette protection set**		1
	Large packages		→ *from page 271*
	Alternatively:		
[8a]	SEC flush-encased gearbox set	1	→ *from page 282*
			№
SEC espagnolette protection set		10 Piece(s)	728952

Contents:

[*]		#
[14]	SEC espagnolette protection	1
[16]	SEC connector	2
[30]	Countersunk screw M5 x 10	2

[9]	**Cylinder screw M5 x 12**			2
				№
Cylinder screw		M5x12	100 Piece(s)	728925

[10]	**Espagnolette support**			1
				№
Espagnolette support		For Roto Line AL geared-handle	100 Piece(s)	331937

[11]	**Roto Line AL geared-handle**, lockable	1 → CTL_1
	Alternatively:	
[a]	Window handle – standard, lockable	1 → CTL_1
	Countersunk screw M5 x 30	2

Height-dependent components

[5]	**Striker**		
			№
V.01	9	100 Piece(s)	728918
V.02	9	100 Piece(s)	728920

≤ 1300	–
1301 – 1800	2
1801 – 2400	4
> 2400	6

[6]	**Cam, insertable**	
		№
Insertable	100 Piece(s)	334671

≤ 1300	–
1301 – 1800	2
1801 – 2400	4
> 2400	6

[13]	**Countersunk screw ST4.8 x 16; special head**, as an additional means of securing the pivot rest		
	Alternatively for thread engagement ≤ 6 mm:		
	Rivet nut set, metric		→ *from page 288*
			№
Countersunk screw	ST4,8x16	100 Piece(s)	728933

≤ 2400	–
> 2400	1

Width-dependent components

[*]	**TF additional stay arm set | 130 kg**[17]; SW > 1300 mm		
			№
V.01	160	10 Piece(s)	728978
V.02	160	10 Piece(s)	728979

[17] Installation of the mishandling device on the corner drive / flush-encased gearbox is prescribed in accordance with DIN 18360 (German construction contract procedures (VOB)).

Contents:

[*]		#
[60]	Additional scissor stay arm, compl. V.01 / V.02	1
[61]	Retaining spring, compl.	1
[62]	Coupling rod	1
[63]	Scissor stay guide, compl. TF	1
[64]	Additional stay arm stop, compl. TF | 130 kg	1
[65]	Coupler component, compl.	1

≤ 1300	–
> 1300	1

INFO
Tilt distance limited to 160 mm.

[5] Striker

			№
V.01	9	100 Piece(s)	728918
V.02	9	100 Piece(s)	728920

≤ 1300	–
> 1300	2

[6] Cam, insertable

		№
Insertable	100 Piece(s)	334671

≤ 1300	–
> 1300	2

Weight-dependent components

[*] **Upgrade set | 130 kg**; S.kg > 90 kg — 1

		№
max. 130 kg	10 Piece(s)	728695

Contents:

[*]		#
[13]	Countersunk screw ST4.8 x 16; special head	1
[23]	Fixing connecting-link | 130 kg	1

4.2.3 TF | RC 3 | 90 - 130 kg

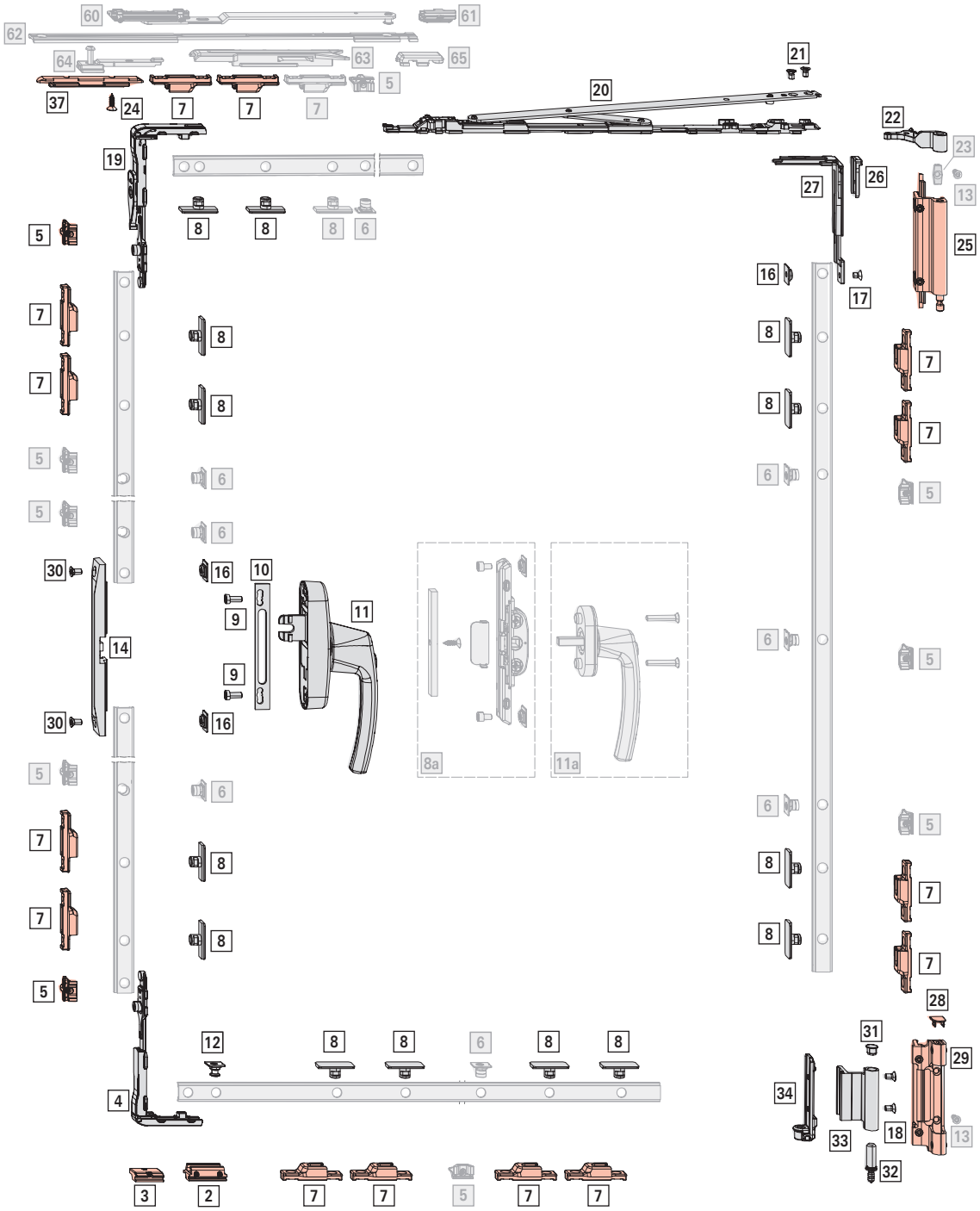

Application range

Sash width **SW**: 770 - 1600 mm

Sash height **SH**: 920 - 3000 mm

Sash weight **S.kg**: max. 130 kg

Hinge passage **HP**: > 3.5 / > 5 mm

Basic set

[*] T&T / TF hinge side set | 90 kg; SH ≤ 2700 mm; HP 3.5 mm — 1

Large packages → *from page 257*

				№
Clamp strip version 1	R01.5	Silver	20 Piece(s)	728787
	R05.4	Dark bronze	10 Piece(s)	728788
	R06.2	Jet black	10 Piece(s)	728789
	R07.2	Traffic white	10 Piece(s)	728790
	SF	Special colour	10 Piece(s)	728791
Clamp strip version 2	R01.5	Silver	10 Piece(s)	728792
	R05.4	Dark bronze	10 Piece(s)	728793
	R06.2	Jet black	10 Piece(s)	728794
	R07.2	Traffic white	10 Piece(s)	728795
	SF	Special colour	10 Piece(s)	728796
Clamp strip version 3	SF	Special colour	10 Piece(s)	728797

Contents:

[*]		#
[18]	Countersunk screw M5 x 9	2
[21]	Countersunk screw M5 x 8	2
[22]	Stay hinge, compl.	1
[25]	Stay bearing, compl.	1
[28]	Pivot rest end cap	1
[29]	Pivot rest, compl.	1
[31]	Corner hinge end cap	1
[32]	Pivot-rest pin	1
[33]	Corner hinge	1
[34]	Clampable corner bracket, compl.	1

INFO

Only use bearings / clamp strips which have been approved for the profile. Information can be obtained from Roto sales representatives.

[*] T&T / TF hinge side set | 90 kg; SH > 2700 mm, HP 5 mm — 1

Using the rivet nut set → *from page 288*

					№
Clamp strip version 1	SF	Special colour	20 Piece(s)	Left	834400
	SF	Special colour	20 Piece(s)	Right	834399
Clamp strip version 2	SF	Special colour	20 Piece(s)	Left	834156
	SF	Special colour	20 Piece(s)	Right	834155

Contents:

[*]		#
[22]	Stay hinge, compl.	1
[25]	Stay bearing, compl.	1
[28]	Pivot rest end cap	1
[29]	Pivot rest, compl.	1
[31]	Corner hinge end cap	1
	Corner hinge, reinforced	1
	Small parts set	1

[*] TF locking components set — 1

		№
V.01	10 Piece(s)	728976
V.02	10 Piece(s)	728977

Contents:

[*]		#
[2]	TF tilt striker	1
[3]	Run-up wedge V.01 / V.02	1
[4]	Corner drive without blocking device, with retaining fork	1
[5]	Striker V.01 / V.02	2
[12]	TF tilt lock bolt	1
[19]	Corner drive with blocking device and retaining fork	1

[20] Sash stay — 1

				№
400	max. 100 kg	160	10 Piece(s)	728969
600	max. 130 kg	160	10 Piece(s)	728970

[*] CL SEC corner drive set — 1

Large packages → *from page 257*

		№
V.01 V.02	10 Piece(s)	728944

[*]		#
[16]	SEC connector	1
[17]	Countersunk screw M5 x 7	1
[26]	SEC retaining fork	1
[27]	CL SEC corner drive	1

[*] SEC rebate-clearance reduction set — 1

Large packages → *from page 275*

			№
SEC rebate-clearance reduction set	For corner drives	10 Piece(s)	728950

[*]		#
[24]	Countersunk screw ST4.8 x 16	1
[37]	SEC rebate-clearance reduction CD	1

[7]	SEC striker		14
V.01	9	100 Piece(s)	212637
V.02	9	100 Piece(s)	212638

[8]	SEC cam	RC 3	14
Insertable		100 Piece(s)	443530

Espagnolette and connector

[*]	SEC espagnolette protection set		1
	Large packages		→ *from page 271*
	Alternatively:		
[8a]	SEC flush-encased gearbox set	1	→ *from page 282*
SEC espagnolette protection set		10 Piece(s)	728952

Contents:

[*]		#
[14]	SEC espagnolette protection	1
[16]	SEC connector	2
[30]	Countersunk screw M5 x 10	2

[9]	Cylinder screw M5 x 12		2
Cylinder screw	M5x12	100 Piece(s)	728925

[10]	Espagnolette support		1
Espagnolette support	For Roto Line AL geared-handle	100 Piece(s)	331937

[11]	Roto Line AL geared-handle, lockable		1 → CTL_1
	Alternatively:		
[a]	Window handle – standard, lockable	1	→ CTL_1
	Countersunk screw M5 x 30	2	

Height-dependent components

[5]	Striker		
V.01	9	100 Piece(s)	728918
V.02	9	100 Piece(s)	728920

≤ 1300	–
1301 – 1800	2
1801 – 2400	4
> 2400	6

[6]	Cam, insertable	
Insertable	100 Piece(s)	334671

≤ 1300	–
1301 – 1800	2
1801 – 2400	4
> 2400	6

[13]	Countersunk screw ST4.8 x 16; special head, as an additional means of securing the pivot rest Alternatively for thread engagement ≤ 6 mm: Rivet nut set, metric			→ *from page 288*
Countersunk screw		ST4,8x16	100 Piece(s)	728933

≤ 2400	–
> 2400	1

Width-dependent components

[*]	TF additional stay arm set | 130 kg[18]; SW > 1300 mm		
V.01	160	10 Piece(s)	728978
V.02	160	10 Piece(s)	728979

[18] Installation of the mishandling device on the corner drive / flush-encased gearbox is prescribed in accordance with DIN 18360 (German construction contract procedures (VOB)).

Contents:

[*]		#
[60]	Additional scissor stay arm, compl. V.01 / V.02	1
[61]	Retaining spring, compl.	1
[62]	Coupling rod	1
[63]	Scissor stay guide, compl. TF	1
[64]	Additional stay arm stop, compl. TF | 130 kg	1
[65]	Coupler component, compl.	1

≤ 1300	–
> 1300	1

INFO
Tilt distance limited to 160 mm.

[5] Striker

			№
V.01	9	100 Piece(s)	728918
V.02	9	100 Piece(s)	728920

≤ 1300	–
> 1300	2

[6] Cam, insertable

		№
Insertable	100 Piece(s)	334671

≤ 1300	–
> 1300	2

[7] SEC striker

			№
V.01	9	100 Piece(s)	212637
V.02	9	100 Piece(s)	212638

≤ 1300	–
> 1300	1

[8] SEC cam RC 3

		№
Insertable	100 Piece(s)	443530

≤ 1300	–
> 1300	1

Weight-dependent components

[*] Upgrade set | 130 kg; S.kg > 90 kg 1

		№
max. 130 kg	10 Piece(s)	728695

Contents:

[*]		#
[13]	Countersunk screw ST4.8 x 16; special head	1
[23]	Fixing connecting-link | 130 kg	1

4.2.4 TF | 160 kg

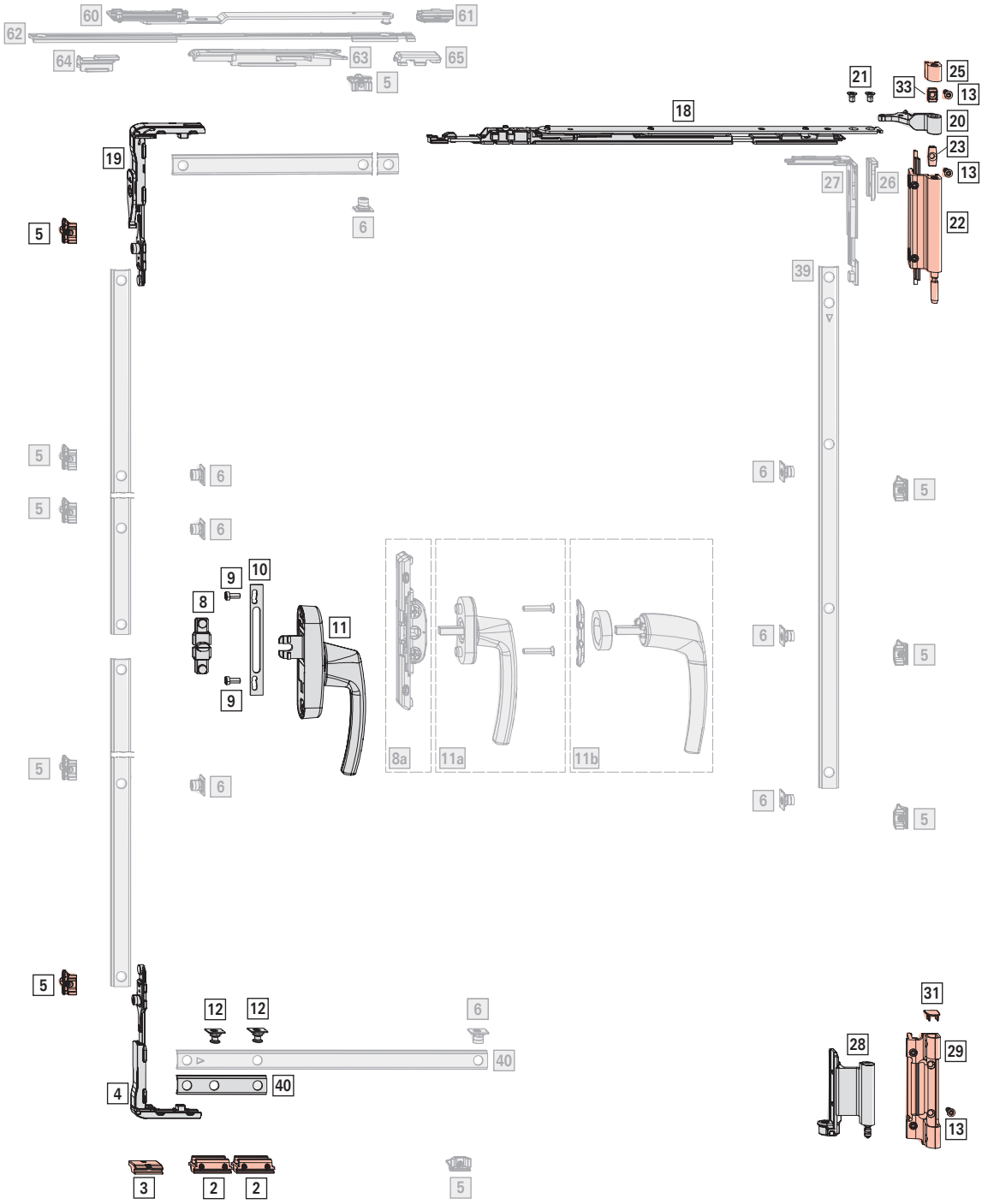
60
61
62
64
63
65
5
21
33
25
13
18
20
23
13
19
27
26
22
6
5
39
5
6
6
5
5
6
6
5
9
10
8
11
9
8a
11a
11b
5
6
6
5
5
31
12
12
6
28
29
40
4
40
13
3
2
2
5

Application range

Sash width **SW**: 600 - 1600 mm

Sash height **SH**: 1000 - 3000 mm

Sash weight **S.kg**: max. 160 kg

Hinge passage **HP**: > 5 mm

Basic set

[*] T&T / TF hinge side set | 160 kg 1

					№
Clamp strip version 1	R01.5	Silver	Left	10 Piece(s)	793411
			Right	10 Piece(s)	793410
	R05.4	Dark bronze	Left	10 Piece(s)	793417
			Right	10 Piece(s)	793416
	R06.2M	Jet black, matt	Left	10 Piece(s)	793413
			Right	10 Piece(s)	793412
	R07.2	Traffic white	Left	10 Piece(s)	793415
			Right	10 Piece(s)	793414
	SF	Special colour	Left	10 Piece(s)	793419
			Right	10 Piece(s)	793418
	Roh	Untreated	Left	10 Piece(s)	793421
			Right	10 Piece(s)	793420
Clamp strip version 2	R01.5	Silver	Left	10 Piece(s)	793425
			Right	10 Piece(s)	793424
	R05.4	Dark bronze	Left	10 Piece(s)	793431
			Right	10 Piece(s)	793430
	R06.2M	Jet black, matt	Left	10 Piece(s)	793427
			Right	10 Piece(s)	793426
	R07.2	Traffic white	Left	10 Piece(s)	793429
			Right	10 Piece(s)	793428
	SF	Special colour	Left	10 Piece(s)	793433
			Right	10 Piece(s)	793432
	Roh	Untreated	Left	10 Piece(s)	793435
			Right	10 Piece(s)	793434
Clamp strip version 3	SF	Special colour	Left	10 Piece(s)	793437
			Right	10 Piece(s)	793436
	Roh	Untreated	Left	10 Piece(s)	793439
			Right	10 Piece(s)	793438

INFO
Untreated components for users who intend to paint the component themselves.

Contents:

[*]		#
[13]	Countersunk screw ST4.8 x 16; special head	3
[20]	Stay hinge, compl. | 160 kg	1
[21]	Countersunk screw M5 x 8	2
[22]	Stay bearing, compl. | 160 kg	1
[23]	Fixing connecting-link | 130 kg	1
[25]	Counter bearing	1
[28]	Corner hinge, compl. | 160 kg	1
[29]	Pivot rest, compl. | 160 kg	1
[31]	Pivot rest end cap	1
[33]	Fixing connecting-link | 160 kg	1

INFO
Only use bearings / clamp strips which have been approved for the profile. Information can be obtained from Roto sales representatives.

[*] T&T locking components set 1
Large packages → *from page 257*

		№
V.01	10 Piece(s)	793475
V.02	10 Piece(s)	793476

Contents:

[*]		#
[2]	TF tilt striker	2
[3]	Run-up wedge V.01 / V.02	2
[4]	Corner drive without blocking device, with retaining fork	1
[5]	Striker V.01 / V.02	2
[12]	TF tilt lock bolt	2
[19]	Corner drive with blocking device and retaining fork	1

[18] Sash stay 1

				№
620	max. 160 kg	190	10 Piece(s)	793406

[40] Connecting rod, fixed, horizontal, bottom (CR5)
→ *from page 274*

Espagnolette and connector

[*] T connector set 1
Alternatively:
[8a] Flush-encased gearbox 1 → *from page 272*

		№
AL T connector set	10 Piece(s)	728981

Contents:

[*]		
[8]	T connector	1
[9]	Cylinder screw M5 x 12	2

[10] Espagnolette support — 1

			Nº
Espagnolette support	For Roto Line AL geared-handle	100 Piece(s)	331937

[11] Roto Line AL geared-handle — 1

→ CTL_1

	Alternatively:		
[a]	Window handle – standard	1	→ CTL_1
	Countersunk screw M5 x 30	2	
[b]	Handle without escutcheon	1	→ CTL_1
	Ring for handle without escutcheon	1	
	Mounting plate	1	

Height-dependent components

[*] CL corner drive set

Large packages → *from page 257*

		Nº
V.01	20 Piece(s)	728842
V.02	20 Piece(s)	728843

Contents:

[*]		#
[5]	Striker V.01 / V.02	2
[6]	Cam, insertable	2
[26]	Retaining fork	1
[27]	CL corner drive	1

≤ 1300	–
> 1300	1

[5] Striker

			Nº
V.01	9	100 Piece(s)	728918
V.02	9	100 Piece(s)	728920

≤ 1800	–
1801 – 2400	2
> 2400	4

[6] Cam, insertable

		Nº
Insertable	100 Piece(s)	334671

≤ 1800	–
1801 – 2400	2
> 2400	4

[39] Connecting rod, fixed, vertical (CR4) — 1

→ *from page 274*

Width-dependent components

[*] TF additional stay arm set | 200 kg[19]; SW > 1300 mm

			Nº
V.01	190	10 Piece(s)	822469
V.02	190	10 Piece(s)	822490

Contents:

[*]		#
[60]	Additional scissor stay arm, compl. V.01 / V.02	1
[61]	Retaining spring, compl.	1
[62]	Coupling rod	1
[63]	Scissor stay guide, compl. TF	1
[64]	TF additional stay arm stop | 200 kg	1
[65]	Coupler component, compl.	1

≤ 1300	–
> 1300	1

INFO
Tilt distance limited to 190 mm.

[5] Striker

			Nº
V.01	9	100 Piece(s)	728918
V.02	9	100 Piece(s)	728920

≤ 1300	–
> 1300	2

[19] Installation of the mishandling device on the corner drive / flush-encased gearbox is prescribed in accordance with DIN 18360 (German construction contract procedures (VOB)).

[6] Cam, insertable

		№
Insertable	100 Piece(s)	334671

≤ 1300	–
> 1300	2

4.2.5 TF | RC 2 | 160 kg

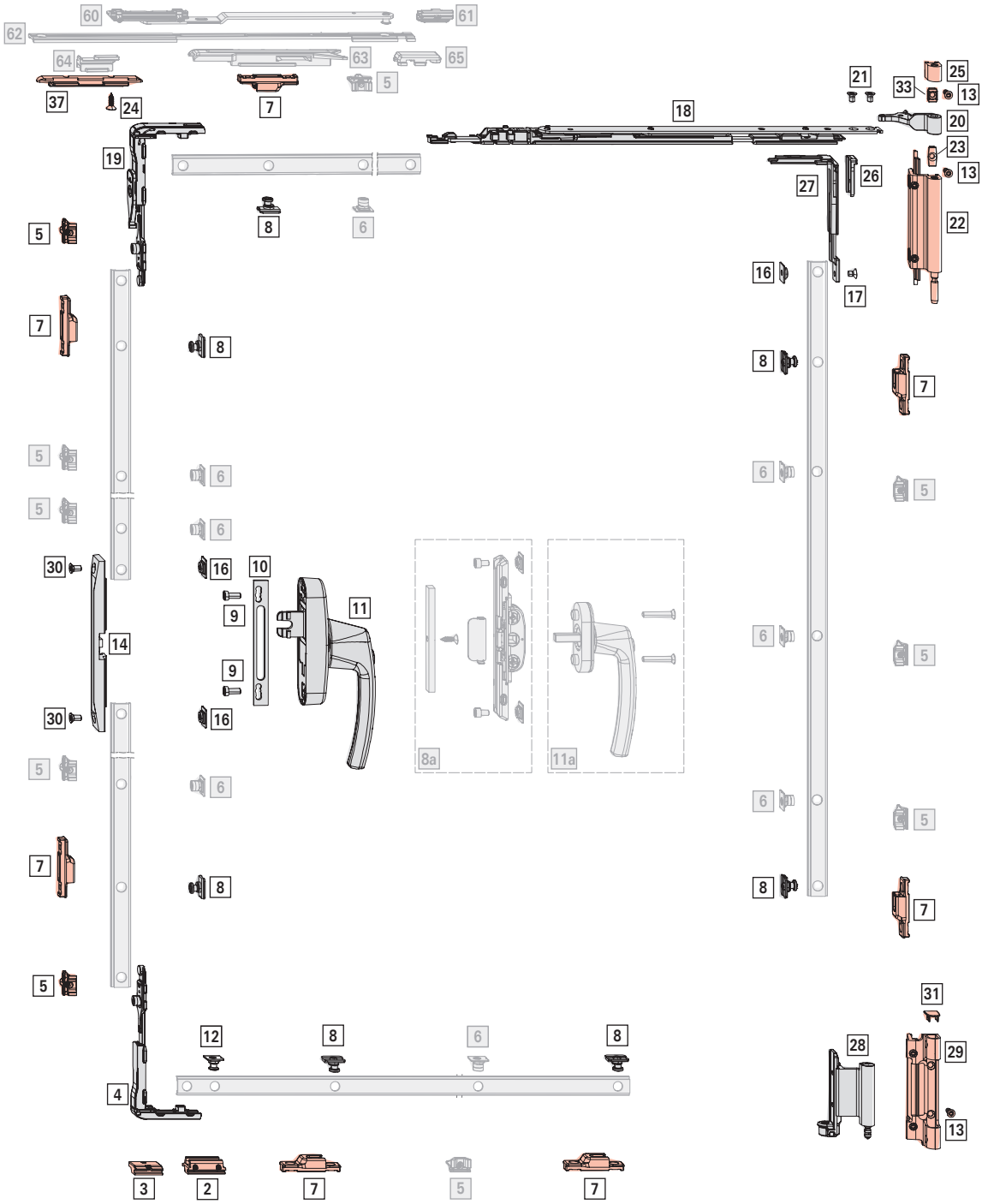

Application range

Sash width **SW**: 680 - 1600 mm

Sash height **SH**: 1000 - 3000 mm

Sash weight **S.kg**: max. 160 kg

Hinge passage **HP**: > 5 mm

Basic set

[*] T&T / TF hinge side set | 160 kg 1

					№
Clamp strip version 1	R01.5	Silver	Left	10 Piece(s)	793411
			Right	10 Piece(s)	793410
	R05.4	Dark bronze	Left	10 Piece(s)	793417
			Right	10 Piece(s)	793416
	R06.2M	Jet black, matt	Left	10 Piece(s)	793413
			Right	10 Piece(s)	793412
	R07.2	Traffic white	Left	10 Piece(s)	793415
			Right	10 Piece(s)	793414
	SF	Special colour	Left	10 Piece(s)	793419
			Right	10 Piece(s)	793418
	Roh	Untreated	Left	10 Piece(s)	793421
			Right	10 Piece(s)	793420
Clamp strip version 2	R01.5	Silver	Left	10 Piece(s)	793425
			Right	10 Piece(s)	793424
	R05.4	Dark bronze	Left	10 Piece(s)	793431
			Right	10 Piece(s)	793430
	R06.2M	Jet black, matt	Left	10 Piece(s)	793427
			Right	10 Piece(s)	793426
	R07.2	Traffic white	Left	10 Piece(s)	793429
			Right	10 Piece(s)	793428
	SF	Special colour	Left	10 Piece(s)	793433
			Right	10 Piece(s)	793432
	Roh	Untreated	Left	10 Piece(s)	793435
			Right	10 Piece(s)	793434
Clamp strip version 3	SF	Special colour	Left	10 Piece(s)	793437
			Right	10 Piece(s)	793436
	Roh	Untreated	Left	10 Piece(s)	793439
			Right	10 Piece(s)	793438

INFO
Untreated components for users who intend to paint the component themselves.

Contents:

[*]		#
[13]	Countersunk screw ST4.8 x 16; special head	3
[20]	Stay hinge, compl. | 160 kg	1
[21]	Countersunk screw M5 x 8	2
[22]	Stay bearing, compl. | 160 kg	1
[23]	Fixing connecting-link | 130 kg	1
[25]	Counter bearing	1
[28]	Corner hinge, compl. | 160 kg	1
[29]	Pivot rest, compl. | 160 kg	1
[31]	Pivot rest end cap	1
[33]	Fixing connecting-link | 160 kg	1

INFO
Only use bearings / clamp strips which have been approved for the profile. Information can be obtained from Roto sales representatives.

[*] T&T locking components set 1
Large packages → *from page 257*

		№
V.01	10 Piece(s)	793475
V.02	10 Piece(s)	793476

Contents:

[*]		#
[2]	TF tilt striker	2
[3]	Run-up wedge V.01 / V.02	2
[4]	Corner drive without blocking device, with retaining fork	1
[5]	Striker V.01 / V.02	2
[12]	TF tilt lock bolt	2
[19]	Corner drive with blocking device and retaining fork	1

[18] Sash stay 1

				№
620	max. 160 kg	190	10 Piece(s)	793406

[*] CL SEC corner drive set 1
Large packages → *from page 257*

		№
V.01 V.02	10 Piece(s)	728944

[*]		#
[16]	SEC connector	1
[17]	Countersunk screw M5 x 7	1
[26]	SEC retaining fork	1
[27]	CL SEC corner drive	1

[*] SEC rebate-clearance reduction set 1

Large packages → *from page 275*			
			№
SEC rebate-clearance reduction set	For corner drives	10 Piece(s)	728950

[*]		#
[24]	Countersunk screw ST4.8 x 16	1
[37]	SEC rebate-clearance reduction CD	1

[7] SEC striker 7

			№
V.01	9	100 Piece(s)	212637
V.02	9	100 Piece(s)	212638

[8] SEC cam RC 2 7

		№
Insertable	100 Piece(s)	447245

Espagnolette and connector

[*] SEC espagnolette protection set 1

Large packages → *from page 271*

Alternatively:

[8a] SEC flush-encased gearbox set 1 → *from page 282*

		№
SEC espagnolette protection set	10 Piece(s)	728952

Contents:

[*]		#
[14]	SEC espagnolette protection	1
[16]	SEC connector	2
[30]	Countersunk screw M5 x 10	2

[9] Cylinder screw M5 x 12 2

			№
Cylinder screw	M5x12	100 Piece(s)	728925

[10] Espagnolette support 1

			№
Espagnolette support	For Roto Line AL geared-handle	100 Piece(s)	331937

[11] Roto Line AL geared-handle, lockable 1 → CTL_1

Alternatively:

[a] Window handle – standard, lockable 1 → CTL_1

Countersunk screw M5 x 30 2

Height-dependent components

[5] Striker

			№
V.01	9	100 Piece(s)	728918
V.02	9	100 Piece(s)	728920

≤ 1300	–
1301 – 1800	2
1801 – 2400	4
> 2400	6

[6] Cam, insertable

		№
Insertable	100 Piece(s)	334671

≤ 1300	–
1301 – 1800	2
1801 – 2400	4
> 2400	6

Width-dependent components

[*] TF additional stay arm set | 200 kg[20]; SW > 1300 mm

			№
V.01	190	10 Piece(s)	822469
V.02	190	10 Piece(s)	822490

Contents:

[*]		#
[60]	Additional scissor stay arm, compl. V.01 / V.02	1
[61]	Retaining spring, compl.	1
[62]	Coupling rod	1
[63]	Scissor stay guide, compl. TF	1
[64]	TF additional stay arm stop | 200 kg	1
[65]	Coupler component, compl.	1

≤ 1300	–
> 1300	1

INFO
Tilt distance limited to 190 mm.

[20] Installation of the mishandling device on the corner drive / flush-encased gearbox is prescribed in accordance with DIN 18360 (German construction contract procedures (VOB)).

[5] Striker

			№
V.01	9	100 Piece(s)	728918
V.02	9	100 Piece(s)	728920

≤ 1300	–
> 1300	2

[6] Cam, insertable

		№
Insertable	100 Piece(s)	334671

≤ 1300	–
> 1300	2

4.2.6 TF | RC 3 | 160 kg

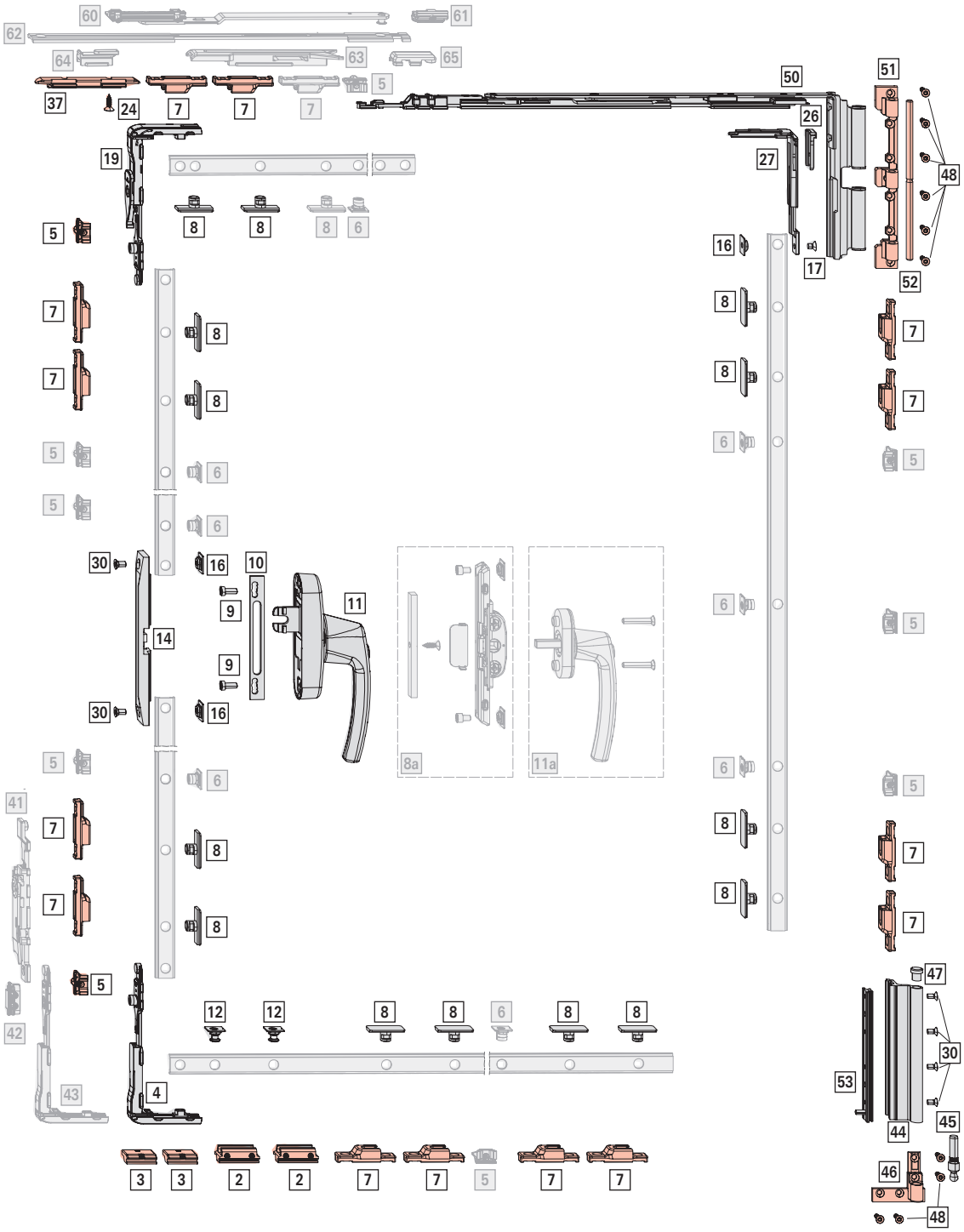

Application range

Sash width **SW**: 755 - 1600 mm

Sash height **SH**: 1000 - 3000 mm

Sash weight **S.kg**: max. 160 kg

Hinge passage **HP**: > 5 mm

Basic set

[*] T&T / TF hinge side set | 160 kg 1

					№
Clamp strip version 1	R01.5	Silver	Left	10 Piece(s)	793411
			Right	10 Piece(s)	793410
	R05.4	Dark bronze	Left	10 Piece(s)	793417
			Right	10 Piece(s)	793416
	R06.2M	Jet black, matt	Left	10 Piece(s)	793413
			Right	10 Piece(s)	793412
	R07.2	Traffic white	Left	10 Piece(s)	793415
			Right	10 Piece(s)	793414
	SF	Special colour	Left	10 Piece(s)	793419
			Right	10 Piece(s)	793418
	Roh	Untreated	Left	10 Piece(s)	793421
			Right	10 Piece(s)	793420
Clamp strip version 2	R01.5	Silver	Left	10 Piece(s)	793425
			Right	10 Piece(s)	793424
	R05.4	Dark bronze	Left	10 Piece(s)	793431
			Right	10 Piece(s)	793430
	R06.2M	Jet black, matt	Left	10 Piece(s)	793427
			Right	10 Piece(s)	793426
	R07.2	Traffic white	Left	10 Piece(s)	793429
			Right	10 Piece(s)	793428
	SF	Special colour	Left	10 Piece(s)	793433
			Right	10 Piece(s)	793432
	Roh	Untreated	Left	10 Piece(s)	793435
			Right	10 Piece(s)	793434
Clamp strip version 3	SF	Special colour	Left	10 Piece(s)	793437
			Right	10 Piece(s)	793436
	Roh	Untreated	Left	10 Piece(s)	793439
			Right	10 Piece(s)	793438

INFO
Untreated components for users who intend to paint the component themselves.

Contents:

[*]		#
[13]	Countersunk screw ST4.8 x 16; special head	3
[20]	Stay hinge, compl. | 160 kg	1
[21]	Countersunk screw M5 x 8	2
[22]	Stay bearing, compl. | 160 kg	1
[23]	Fixing connecting-link | 130 kg	1
[25]	Counter bearing	1
[28]	Corner hinge, compl. | 160 kg	1
[29]	Pivot rest, compl. | 160 kg	1
[31]	Pivot rest end cap	1
[33]	Fixing connecting-link | 160 kg	1

INFO
Only use bearings / clamp strips which have been approved for the profile. Information can be obtained from Roto sales representatives.

[*] T&T locking components set 1
Large packages → *from page 257*

		№
V.01	10 Piece(s)	793475
V.02	10 Piece(s)	793476

Contents:

[*]		#
[2]	TF tilt striker	2
[3]	Run-up wedge V.01 / V.02	2
[4]	Corner drive without blocking device, with retaining fork	1
[5]	Striker V.01 / V.02	2
[12]	TF tilt lock bolt	2
[19]	Corner drive with blocking device and retaining fork	1

[18] Sash stay 1

				№
620	max. 160 kg	190	10 Piece(s)	793406

[*] CL SEC corner drive set 1
Large packages → *from page 257*

		№
V.01 V.02	10 Piece(s)	728944

[*]		#
[16]	SEC connector	1
[17]	Countersunk screw M5 x 7	1
[26]	SEC retaining fork	1
[27]	CL SEC corner drive	1

[*] SEC rebate-clearance reduction set 1

Large packages → *from page 275*			
			№
SEC rebate-clearance reduction set	For corner drives	10 Piece(s)	728950

[*]		#
[24]	Countersunk screw ST4.8 x 16	1
[37]	SEC rebate-clearance reduction CD	1

[7]	SEC striker			14
				№
V.01	9	100 Piece(s)		212637
V.02	9	100 Piece(s)		212638

[8]	SEC cam	RC 3	14
			№
Insertable		100 Piece(s)	443530

Espagnolette and connector

[*]	SEC espagnolette protection set		1
	Large packages		→ *from page 271*
	Alternatively:		
[8a]	SEC flush-encased gearbox set	1	→ *from page 282*
			№
SEC espagnolette protection set		10 Piece(s)	728952

Contents:

[*]		#
[14]	SEC espagnolette protection	1
[16]	SEC connector	2
[30]	Countersunk screw M5 x 10	2

[9]	Cylinder screw M5 x 12		2
			№
Cylinder screw	M5x12	100 Piece(s)	728925

[10]	Espagnolette support		1
			№
Espagnolette support	For Roto Line AL geared-handle	100 Piece(s)	331937

[11]	Roto Line AL geared-handle, lockable		1 → CTL_1
	Alternatively:		
[a]	Window handle – standard, lockable	1	→ CTL_1
	Countersunk screw M5 x 30	2	

Height-dependent components

[5]	Striker		
			№
V.01	9	100 Piece(s)	728918
V.02	9	100 Piece(s)	728920

≤ 1300	–
1301 – 1800	2
1801 – 2400	4
> 2400	6

[6]	Cam, insertable	
		№
Insertable	100 Piece(s)	334671

≤ 1300	–
1301 – 1800	2
1801 – 2400	4
> 2400	6

Width-dependent components

[*]	TF additional stay arm set | 200 kg[21]; SW > 1300 mm		
			№
V.01	190	10 Piece(s)	822469
V.02	190	10 Piece(s)	822490

Contents:

[*]		#
[60]	Additional scissor stay arm, compl. V.01 / V.02	1
[61]	Retaining spring, compl.	1
[62]	Coupling rod	1
[63]	Scissor stay guide, compl. TF	1
[64]	TF additional stay arm stop | 200 kg	1
[65]	Coupler component, compl.	1

≤ 1300	–
> 1300	1

INFO
Tilt distance limited to 190 mm.

[21] Installation of the mishandling device on the corner drive / flush-encased gearbox is prescribed in accordance with DIN 18360 (German construction contract procedures (VOB)).

[5] Striker

			№
V.01	9	100 Piece(s)	728918
V.02	9	100 Piece(s)	728920

≤ 1300	–
> 1300	2

[6] Cam, insertable

		№
Insertable	100 Piece(s)	334671

≤ 1300	–
> 1300	2

[7] SEC striker

			№
V.01	9	100 Piece(s)	212637
V.02	9	100 Piece(s)	212638

≤ 1300	–
> 1300	1

[8] SEC cam RC 3

		№
Insertable	100 Piece(s)	443530

≤ 1300	–
> 1300	1

4.2.7 TF | 200 kg

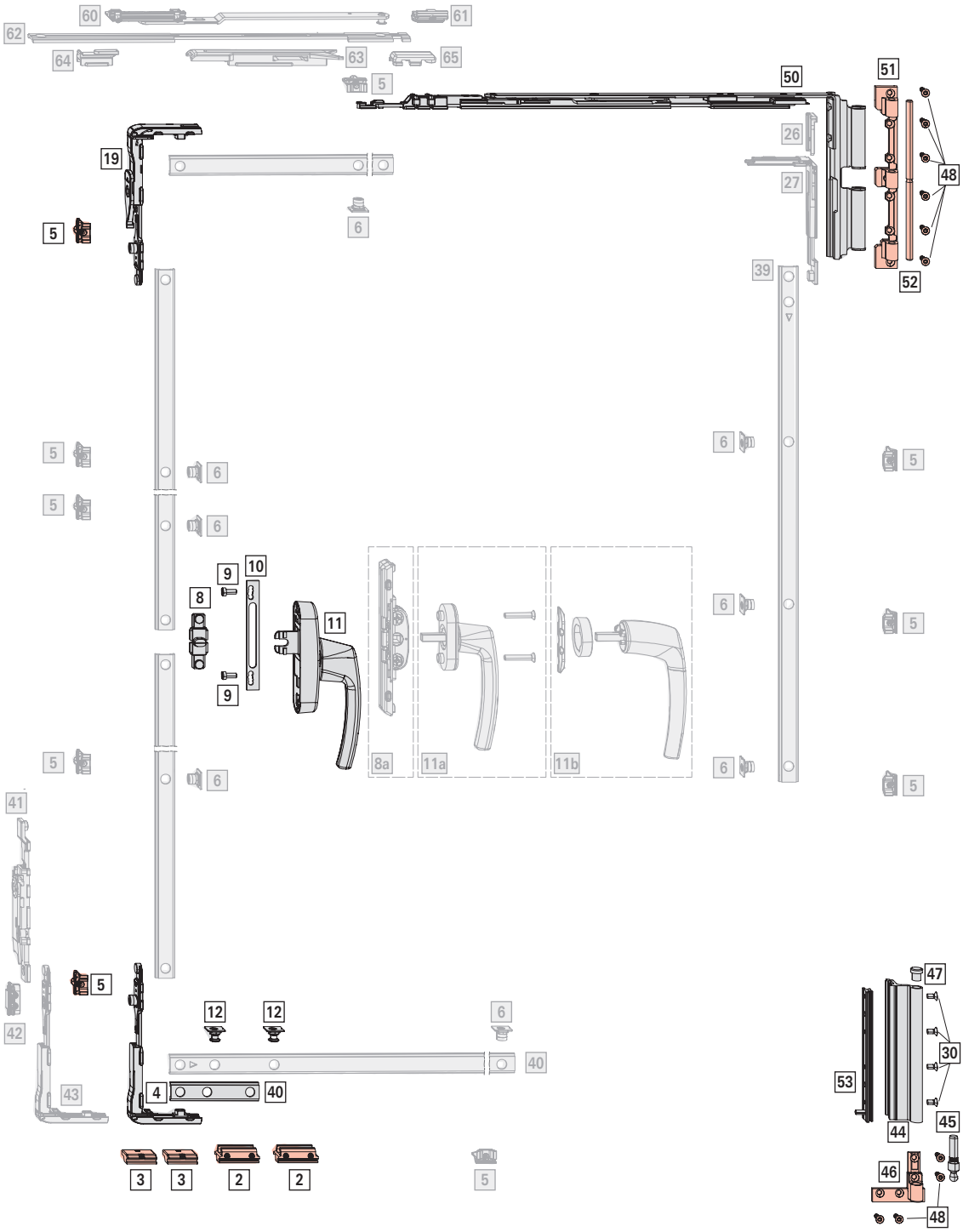
60
61
62
64
63
65
5
50
51
26
19
27
48
6
39
52
5
6
5
6
10
9
8
11
9
8a
11a
11b
6
5
6
5
41
5
42
12
12
6
40
43
4
40
47
30
53
44
45
46
48
3
3
2
2
5

Application range

Sash width **SW**: 640 - 1600 mm

Sash height **SH**: 1100 - 3000 mm

Sash weight **S.kg**: max. 200 kg

Hinge passage **HP**: > 7 mm

Basic set

[*] TF hinge side set | 200 kg 1

				№
SF	Special colour	Left	10 Piece(s)	775016
		Right	10 Piece(s)	775015

Contents:

[*]		#
[30]	Countersunk screw M5 x 10	4
[44]	Corner hinge | 200 kg	1
[45]	Pivot-rest pin | 200 kg	1
[46]	Pivot rest, compl. | 200 kg	1
[47]	Corner hinge end cap (colour can be selected)	2
[48]	Countersunk screw ST4.8 x 19	10
[50]	Sash stay 640 TF (tilt distance 190 mm)	1
[51]	Stay bearing | 200 kg	1
[52]	Bearing pin | 200 kg	1
[53]	Clamping support-strip with pin | 200 kg	1

[*] T&T / TF locking components set; SW ≤ 1300 mm 1

		№
V.01	10 Piece(s)	793475
V.02	10 Piece(s)	793476

Contents:

[*]		#
[2]	TF tilt striker	2
[3]	Run-up wedge V.01 / V.02	2
[4]	Corner drive without blocking device, with retaining fork	1
[5]	Striker V.01 / V.02	2
[12]	TF tilt lock bolt	2
[19]	Corner drive with blocking device and retaining fork	1

[*] T&T / TF locking components set; SW > 1300 mm 1

		№
V.01	10 Piece(s)	775009
V.02	10 Piece(s)	775010

Contents:

[*]		#
[2]	TF tilt striker	2
[3]	Run-up wedge V.01 / V.02	2
[5]	Striker V.01 / V.02	2
[12]	TF tilt lock bolt	2
[19]	Corner drive with blocking device and retaining fork	1
[43]	Corner drive for sash lifter with retaining fork	1

[*] Sash lifter set; SW > 1300 mm 1

		№
Left	20 Piece(s)	775021
Right	20 Piece(s)	775020

[*]		#
[41]	Coupler component with run-up block	1
[42]	Stop	1

[40] Connecting rod, fixed, horizontal, bottom (CR5)

→ *from page 274*

Espagnolette and connector

[*] T connector set 1

Alternatively:

[8a] Flush-encased gearbox 1 → *from page 272*

		№
AL T connector set	10 Piece(s)	728981

Contents:

[*]		
[8]	T connector	1
[9]	Cylinder screw M5 x 12	2

[10] Espagnolette support 1

			№
Espagnolette support	For Roto Line AL geared-handle	100 Piece(s)	331937

[11] Roto Line AL geared-handle 1

→ CTL_1

Alternatively:

[a] Window handle – standard 1 → CTL_1

Countersunk screw M5 x 30 2

[b] Handle without escutcheon 1 → CTL_1

Ring for handle without escutcheon 1

Mounting plate 1

Height-dependent components

[*] CL corner drive set

Large packages → *from page 257*		
		№
V.01	20 Piece(s)	728842
V.02	20 Piece(s)	728843

Contents:

[*]		#
[5]	Striker V.01 / V.02	2
[6]	Cam, insertable	2
[26]	Retaining fork	1
[27]	CL corner drive	1

≤ 1300	–
> 1300	1

[5] Striker			
			№
V.01	9	100 Piece(s)	728918
V.02	9	100 Piece(s)	728920

≤ 1800	–
1801 – 2400	2
> 2400	4

[6] Cam, insertable		
		№
Insertable	100 Piece(s)	334671

≤ 1800	–
1801 – 2400	2
> 2400	4

[39] Connecting rod, fixed, vertical (CR4)	1
→ *from page 274*	

Width-dependent components

[*] TF additional stay arm set | 200 kg[22]; SW > 1300 mm			
			№
V.01	190	10 Piece(s)	822469
V.02	190	10 Piece(s)	822490

Contents:

[*]		#
[60]	Additional scissor stay arm, compl. V.01 / V.02	1
[61]	Retaining spring, compl.	1
[62]	Coupling rod	1
[63]	Scissor stay guide, compl. TF	1
[64]	TF additional stay arm stop | 200 kg	1
[65]	Coupler component, compl.	1

≤ 1300	–
> 1300	1

INFO
Tilt distance limited to 190 mm.

[5] Striker			
			№
V.01	9	100 Piece(s)	728918
V.02	9	100 Piece(s)	728920

≤ 1300	–
> 1300	2

[6] Cam, insertable		
		№
Insertable	100 Piece(s)	334671

≤ 1300	–
> 1300	2

[22] Installation of the mishandling device on the corner drive / flush-encased gearbox is prescribed in accordance with DIN 18360 (German construction contract procedures (VOB)).

4.2.8 TF | RC 2 | 200 kg

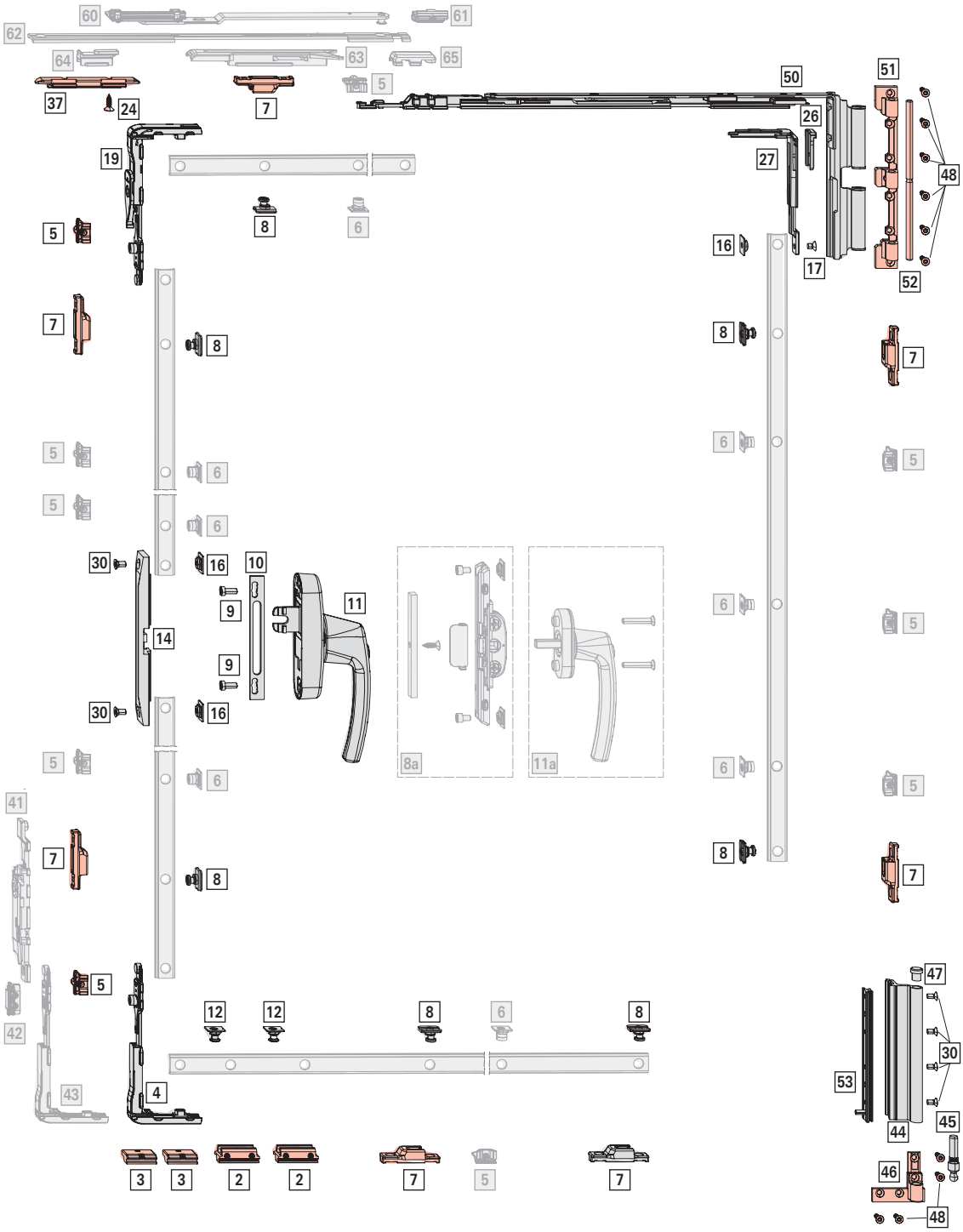

Application range

Sash width **SW**: 730 - 1600 mm

Sash height **SH**: 1100 - 3000 mm

Sash weight **S.kg**: max. 200 kg

Hinge passage **HP**: > 7 mm

Basic set

[*] TF hinge side set | 200 kg — 1

				№
SF	Special colour	Left	10 Piece(s)	775016
		Right	10 Piece(s)	775015

Contents:

[*]		#
[30]	Countersunk screw M5 x 10	4
[44]	Corner hinge | 200 kg	1
[45]	Pivot-rest pin | 200 kg	1
[46]	Pivot rest, compl. | 200 kg	1
[47]	Corner hinge end cap (colour can be selected)	2
[48]	Countersunk screw ST4.8 x 19	10
[50]	Sash stay 640 TF (tilt distance 190 mm)	1
[51]	Stay bearing | 200 kg	1
[52]	Bearing pin | 200 kg	1
[53]	Clamping support-strip with pin | 200 kg	1

[*] T&T / TF locking components set; SW ≤ 1300 mm — 1

		№
V.01	10 Piece(s)	793475
V.02	10 Piece(s)	793476

Contents:

[*]		#
[2]	TF tilt striker	2
[3]	Run-up wedge V.01 / V.02	2
[4]	Corner drive without blocking device, with retaining fork	1
[5]	Striker V.01 / V.02	2
[12]	TF tilt lock bolt	2
[19]	Corner drive with blocking device and retaining fork	1

[*] T&T / TF locking components set; SW > 1300 mm — 1

		№
V.01	10 Piece(s)	775009
V.02	10 Piece(s)	775010

Contents:

[*]		#
[2]	TF tilt striker	2
[3]	Run-up wedge V.01 / V.02	2
[5]	Striker V.01 / V.02	2
[12]	TF tilt lock bolt	2
[19]	Corner drive with blocking device and retaining fork	1
[43]	Corner drive for sash lifter with retaining fork	1

[*] Sash lifter set; SW > 1300 mm — 1

INFO
Perform a system assessment when using the sash lifter set. Further information can be obtained from Roto sales representatives.

		№
Left	20 Piece(s)	775021
Right	20 Piece(s)	775020

[*]		#
[41]	Coupler component with run-up block	1
[42]	Stop	1

[*] CL SEC corner drive set — 1

Large packages → *from page 257*

		№
V.01 V.02	10 Piece(s)	728944

[*]		#
[16]	SEC connector	1
[17]	Countersunk screw M5 x 7	1
[26]	SEC retaining fork	1
[27]	CL SEC corner drive	1

[*] SEC rebate-clearance reduction set — 1

Large packages → *from page 275*

			№
SEC rebate-clearance reduction set	For corner drives	10 Piece(s)	728950

[*]		#
[24]	Countersunk screw ST4.8 x 16	1
[37]	SEC rebate-clearance reduction CD	1

[7] SEC striker — 7

			№
V.01	9	100 Piece(s)	212637
V.02	9	100 Piece(s)	212638

[8] SEC cam	RC 2	7
Insertable	100 Piece(s)	447245

Espagnolette and connector

[*]	SEC espagnolette protection set		1
	Large packages		→ *from page 271*
	Alternatively:		
[8a]	SEC flush-encased gearbox set	1	→ *from page 282*

SEC espagnolette protection set	10 Piece(s)	728952

Contents:

[*]		#
[14]	SEC espagnolette protection	1
[16]	SEC connector	2
[30]	Countersunk screw M5 x 10	2

[9] Cylinder screw M5 x 12			2
Cylinder screw	M5x12	100 Piece(s)	728925

[10] Espagnolette support			1
Espagnolette support	For Roto Line AL geared-handle	100 Piece(s)	331937

[11]	Roto Line AL geared-handle, lockable		1 → CTL_1
	Alternatively:		
[a]	Window handle – standard, lockable	1	→ CTL_1
	Countersunk screw M5 x 30	2	

Height-dependent components

[5] Striker			
V.01	9	100 Piece(s)	728918
V.02	9	100 Piece(s)	728920

≤ 1300	–
1301 – 1800	2
1801 – 2400	4
> 2400	6

[6] Cam, insertable		
Insertable	100 Piece(s)	334671

≤ 1300	–
1301 – 1800	2
1801 – 2400	4
> 2400	6

Width-dependent components

[*]	TF additional stay arm set | 200 kg[23]; SW > 1300 mm		
V.01	190	10 Piece(s)	822469
V.02	190	10 Piece(s)	822490

Contents:

[*]		#
[60]	Additional scissor stay arm, compl. V.01 / V.02	1
[61]	Retaining spring, compl.	1
[62]	Coupling rod	1
[63]	Scissor stay guide, compl. TF	1
[64]	TF additional stay arm stop | 200 kg	1
[65]	Coupler component, compl.	1

≤ 1300	–
> 1300	1

INFO
Tilt distance limited to 190 mm.

[5] Striker			
V.01	9	100 Piece(s)	728918
V.02	9	100 Piece(s)	728920

≤ 1300	–
> 1300	2

[6] Cam, insertable		
Insertable	100 Piece(s)	334671

≤ 1300	–
> 1300	2

[23] Installation of the mishandling device on the corner drive / flush-encased gearbox is prescribed in accordance with DIN 18360 (German construction contract procedures (VOB)).

4.2.9 TF | RC 3 | 200 kg

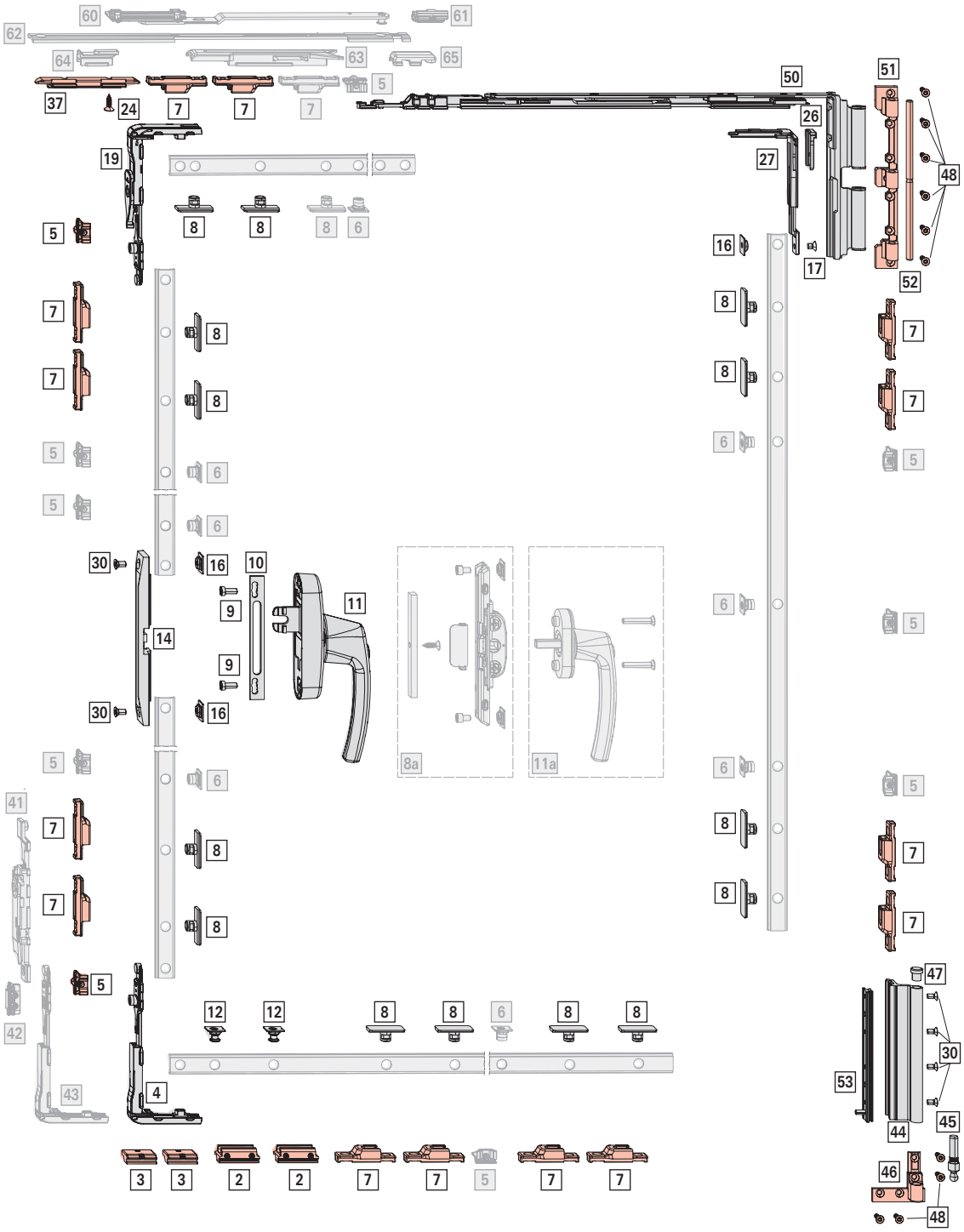

Application range

Sash width **SW**: 815 - 1600 mm

Sash height **SH**: 1100 - 3000 mm

Sash weight **S.kg**: max. 200 kg

Hinge passage **HP**: > 7 mm

Basic set

[*] TF hinge side set | 200 kg — 1

				Nº
SF	Special colour	Left	10 Piece(s)	775016
		Right	10 Piece(s)	775015

Contents:

[*]		#
[30]	Countersunk screw M5 x 10	4
[44]	Corner hinge | 200 kg	1
[45]	Pivot-rest pin | 200 kg	1
[46]	Pivot rest, compl. | 200 kg	1
[47]	Corner hinge end cap (colour can be selected)	2
[48]	Countersunk screw ST4.8 x 19	10
[50]	Sash stay 640 TF (tilt distance 190 mm)	1
[51]	Stay bearing | 200 kg	1
[52]	Bearing pin | 200 kg	1
[53]	Clamping support-strip with pin | 200 kg	1

[*] T&T / TF locking components set; SW ≤ 1300 mm — 1

		Nº
V.01	10 Piece(s)	793475
V.02	10 Piece(s)	793476

Contents:

[*]		#
[2]	TF tilt striker	2
[3]	Run-up wedge V.01 / V.02	2
[4]	Corner drive without blocking device, with retaining fork	1
[5]	Striker V.01 / V.02	2
[12]	TF tilt lock bolt	2
[19]	Corner drive with blocking device and retaining fork	1

[*] T&T / TF locking components set; SW > 1300 mm — 1

		Nº
V.01	10 Piece(s)	775009
V.02	10 Piece(s)	775010

Contents:

[*]		#
[2]	TF tilt striker	2
[3]	Run-up wedge V.01 / V.02	2
[5]	Striker V.01 / V.02	2
[12]	TF tilt lock bolt	2
[19]	Corner drive with blocking device and retaining fork	1
[43]	Corner drive for sash lifter with retaining fork	1

[*] Sash lifter set; SW > 1300 mm — 1

INFO
Perform a system assessment when using the sash lifter set. Further information can be obtained from Roto sales representatives.

		Nº
Left	20 Piece(s)	775021
Right	20 Piece(s)	775020

[*]		#
[41]	Coupler component with run-up block	1
[42]	Stop	1

[*] CL SEC corner drive set — 1

Large packages → *from page 257*

		Nº
V.01 V.02	10 Piece(s)	728944

[*]		#
[16]	SEC connector	1
[17]	Countersunk screw M5 x 7	1
[26]	SEC retaining fork	1
[27]	CL SEC corner drive	1

[*] SEC rebate-clearance reduction set — 1

Large packages → *from page 275*

			Nº
SEC rebate-clearance reduction set	For corner drives	10 Piece(s)	728950

[*]		#
[24]	Countersunk screw ST4.8 x 16	1
[37]	SEC rebate-clearance reduction CD	1

[7] SEC striker — 14

			Nº
V.01	9	100 Piece(s)	212637
V.02	9	100 Piece(s)	212638

[8] SEC cam	RC 3	14
Insertable	100 Piece(s)	443530

Espagnolette and connector

[*]	SEC espagnolette protection set		1
	Large packages		→ *from page 271*
	Alternatively:		
[8a]	SEC flush-encased gearbox set	1	→ *from page 282*

SEC espagnolette protection set	10 Piece(s)	728952

Contents:

[*]		#
[14]	SEC espagnolette protection	1
[16]	SEC connector	2
[30]	Countersunk screw M5 x 10	2

[9] Cylinder screw M5 x 12			2
Cylinder screw	M5x12	100 Piece(s)	728925

[10] Espagnolette support			1
Espagnolette support	For Roto Line AL geared-handle	100 Piece(s)	331937

[11]	Roto Line AL geared-handle, lockable		1 → CTL_1
	Alternatively:		
[a]	Window handle – standard, lockable	1	→ CTL_1
	Countersunk screw M5 x 30	2	

Height-dependent components

[5] Striker			
V.01	9	100 Piece(s)	728918
V.02	9	100 Piece(s)	728920

≤ 1300	–
1301 – 1800	2
1801 – 2400	4
> 2400	6

[6] Cam, insertable		
Insertable	100 Piece(s)	334671

≤ 1300	–
1301 – 1800	2
1801 – 2400	4
> 2400	6

Width-dependent components

[*]	TF additional stay arm set | 200 kg[24]; SW > 1300 mm		
V.01	190	10 Piece(s)	822469
V.02	190	10 Piece(s)	822490

Contents:

[*]		#
[60]	Additional scissor stay arm, compl. V.01 / V.02	1
[61]	Retaining spring, compl.	1
[62]	Coupling rod	1
[63]	Scissor stay guide, compl. TF	1
[64]	TF additional stay arm stop | 200 kg	1
[65]	Coupler component, compl.	1

≤ 1300	–
> 1300	1

INFO
Tilt distance limited to 190 mm.

[5] Striker			
V.01	9	100 Piece(s)	728918
V.02	9	100 Piece(s)	728920

≤ 1300	–
> 1300	2

[6] Cam, insertable		
Insertable	100 Piece(s)	334671

≤ 1300	–
> 1300	2

[24] Installation of the mishandling device on the corner drive / flush-encased gearbox is prescribed in accordance with DIN 18360 (German construction contract procedures (VOB)).

[7] SEC striker			
			№
V.01	9	100 Piece(s)	212637
V.02	9	100 Piece(s)	212638

≤ 1300	–
> 1300	1

[8] SEC cam	RC 3	
		№
Insertable	100 Piece(s)	443530

≤ 1300	–
> 1300	1

4.3 Turn-Only hardware

4.3.1 T-O with CD hinge | 50 kg

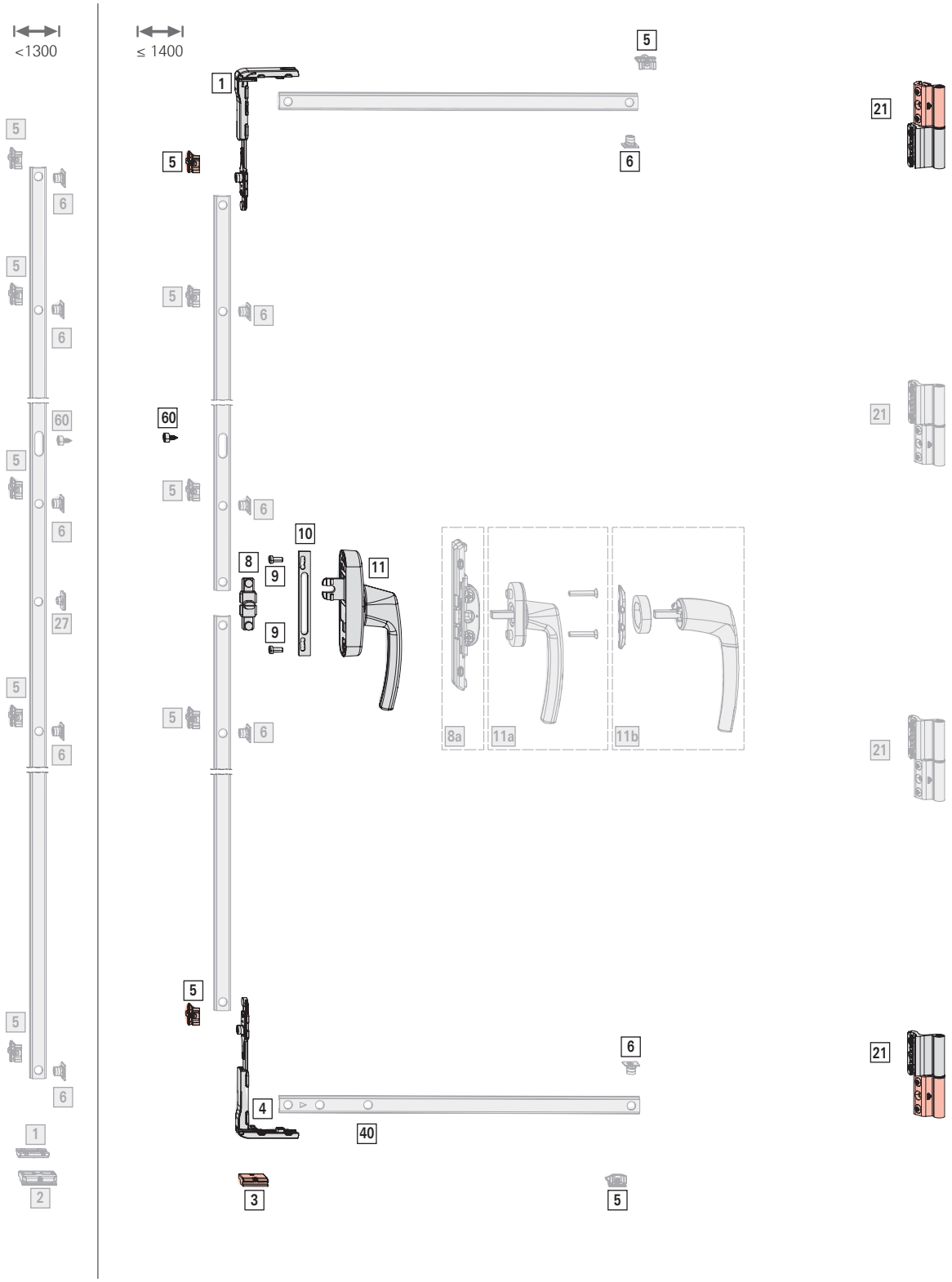

Application range

Sash width **SW**: 200[25] - 1400 mm

Sash height **SH**: 520 - 2250 mm

Sash weight **S.kg**: max. 50 kg

Hinge passage **HP**: > 3.5 mm

Basic set

[21] CD hinge | 50 kg

				№
R01.5	Silver	Left	50 Piece(s)	815705
		Right	50 Piece(s)	815706
R05.4	Dark bronze	Left	50 Piece(s)	815709
		Right	50 Piece(s)	815710
R06.2M	Jet black, matt	Left	50 Piece(s)	815701
		Right	50 Piece(s)	815702
R07.2	Traffic white	Left	50 Piece(s)	815703
		Right	50 Piece(s)	815704
SF	Special colour	Left	50 Piece(s)	815698
		Right	50 Piece(s)	815699
Roh	Uncoated	–	50 Piece(s)	815700

INFO

An element includes up to four CD hinges, depending on the SH. For installation, it is essential to install the top hinge the other way round from the other hinges. This is why, when ordering, you should note the following:

DIN L element: 1 x DIN R, 1-3 x DIN L.

DIN R element: 1 x DIN L, 1-3 x DIN R.

Size-specific combinations:

	#
≤ 1300	2
1301 – 1800	3
> 1800	4

[*] T-O locking components set 1

		№
V.01	10 Piece(s)	728743
V.02	10 Piece(s)	728744

Contents:

[*]		
[3]	Run-up wedge V.01 / V.02	1
[4]	Corner drive without blocking device, with retaining fork	2
[5]	Striker V.01 / V.02	2

[60] Locking sleeve 1

				№
Locking sleeve	Blocks the entire movement of the espagnolette	1	100 Piece(s)	738549

Espagnolette and connector

[*] T connector set

		№
AL T connector set	10 Piece(s)	728981

Contents:

[*]		
[8]	T connector	1
[9]	Cylinder screw M5 x 12	2

[10] Espagnolette support

			№
Espagnolette support	For Roto Line AL geared-handle	100 Piece(s)	331937

[11] Roto Line AL geared-handle 1

→ CTL_1

Alternatively:

[a]	Window handle – standard	1	→ CTL_1
	Countersunk screw M5 x 30	2	
[b]	Handle without escutcheon	1	→ CTL_1
	Ring for handle without escutcheon	1	
	Mounting plate	1	

Height-dependent components

[5] Striker

			№
V.01	9	100 Piece(s)	728918
V.02	9	100 Piece(s)	728920

≤ 1300	–
1301 – 1800	1
1801 – 2400	2
> 2400	3

[25] With small sash widths, pay attention to the system-specific profile assessment.

[6]	Cam, insertable	
		№
Insertable	100 Piece(s)	334671

≤ 1300	–
1301 – 1800	1
1801 – 2400	2
> 2400	3

Width-dependent components

[*]	**T-O locking components set**; SW < 1300 mm	1
		№
V.01	10 Piece(s)	728756
V.02	10 Piece(s)	728757

Contents:

[*]		#
[1]	Run-up block	1
[2]	Tilt striker	1
[5]	Striker V.01 / V.02	2
[6]	Cam, insertable	2

[5]	Striker		
			№
V.01	9	100 Piece(s)	728918
V.02	9	100 Piece(s)	728920

≤ 1300	–
> 1300	2

[6]	Cam, insertable	
		№
Insertable	100 Piece(s)	334671

≤ 1300	–
> 1300	2

[27]	**Connector bolt, insertable**; SW < 1300 mm		
			№
Insertable connector bolt	For Roto Line AL geared-handle	100 Piece(s)	254601

[40] Connecting rod, fixed, horizontal, bottom (CR5)

→ *from page 274*

4.3.2 T-O with CD hinge | 80 kg

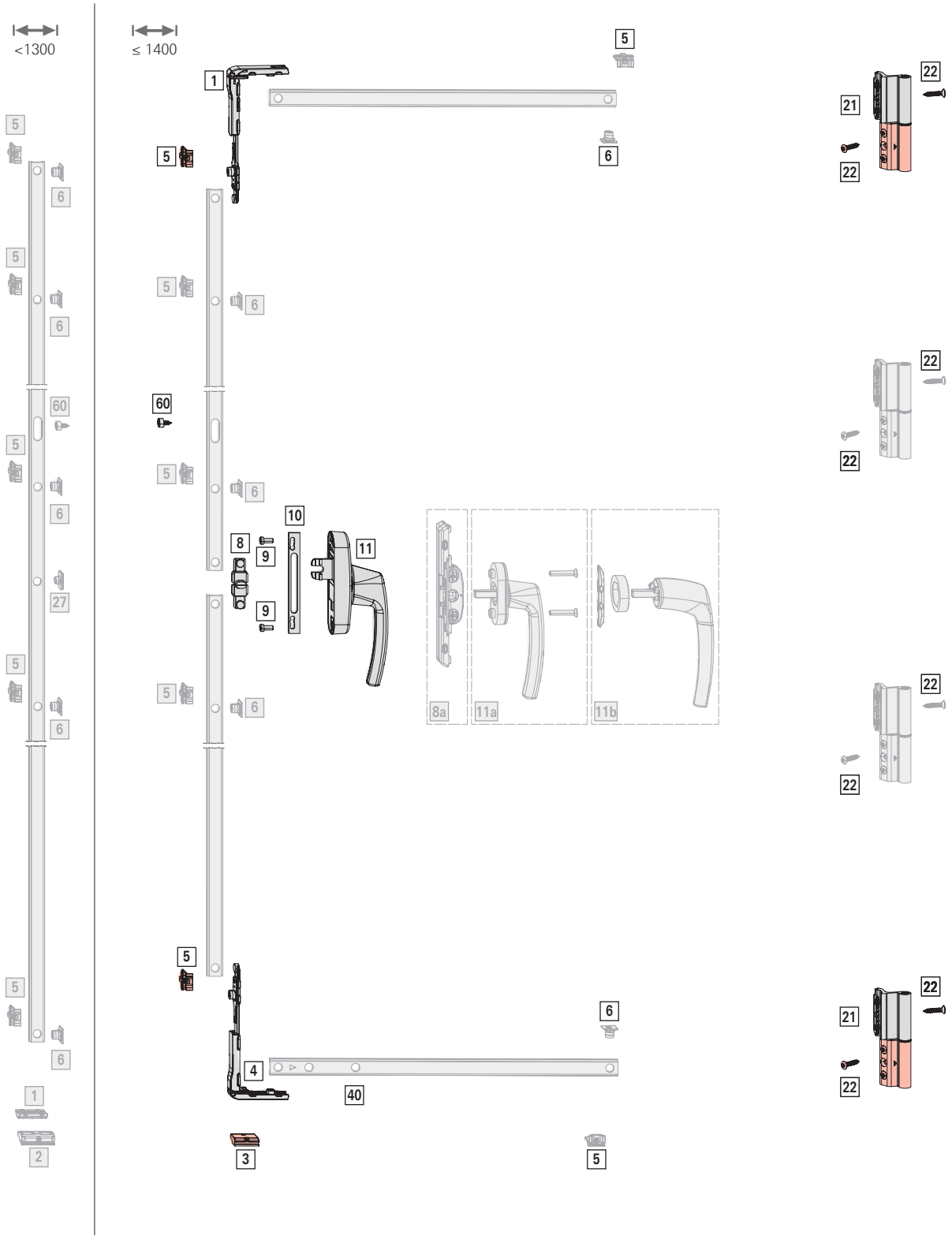

Application range

Sash width **SW**: 200[26] - 1400 mm

Sash height **SH**: 520 - 2700 mm

Sash weight **S.kg**: max. 80 kg

Hinge passage **HP**: > 3.5 mm

Basic set

[21] CD hinge | 80 kg

				№
R01.5	Silver	Left	50 Piece(s)	817168
		Right	50 Piece(s)	817167
R06.2M	Jet black, matt	Left	50 Piece(s)	817198
		Right	50 Piece(s)	817173
R07.2	Traffic white	Left	50 Piece(s)	817195
		Right	50 Piece(s)	817174
SF	Special colour	Left	50 Piece(s)	817197
		Right	50 Piece(s)	817196
Roh	Untreated	–	50 Piece(s)	817167

Size-specific combinations:

	#
520 – 1300	2
1301 – 1800	3
1801 - 2700	4

INFO
Unlike for T-O with CD hinge | 50 kg, only right-hand hinges need to be ordered for DIN R and left-hand hinges for DIN L.

[22] Additional screw

		№
Self-tapping screw ST4.8 x 25	100 Piece(s)	816124
Self-drilling screw ST4.8 x 28	100 Piece(s)	823001

INFO
Two additional screws are required for each CD hinge.

Use a self-tapping screw or self-drilling screw depending on the profile.

[*] T-O locking components set 1

		№
V.01	10 Piece(s)	728743
V.02	10 Piece(s)	728744

Contents:

[*]		
[3]	Run-up wedge V.01 / V.02	1
[4]	Corner drive without blocking device, with retaining fork	2
[5]	Striker V.01 / V.02	2

[60] Locking sleeve 1

		#		№
Locking sleeve	Blocks the entire movement of the espagnolette	1	100 Piece(s)	738549

Espagnolette and connector

[*] T connector set

		№
AL T connector set	10 Piece(s)	728981

Contents:

[*]		
[8]	T connector	1
[9]	Cylinder screw M5 x 12	2

[10] Espagnolette support

			№
Espagnolette support	For Roto Line AL geared-handle	100 Piece(s)	331937

[11] Roto Line AL geared-handle 1

→ CTL_1

Alternatively:

[a]	Window handle – standard	1	→ CTL_1
	Countersunk screw M5 x 30	2	
[b]	Handle without escutcheon	1	→ CTL_1
	Ring for handle without escutcheon	1	
	Mounting plate	1	

Height-dependent components

[5] Striker

			№
V.01	9	100 Piece(s)	728918
V.02	9	100 Piece(s)	728920

≤ 1300	–
1301 – 1800	1
1801 – 2400	2
> 2400	3

[26] With small sash widths, pay attention to the system-specific profile assessment.

[6]	Cam, insertable	
		№
Insertable	100 Piece(s)	334671

≤ 1300	–
1301 – 1800	1
1801 – 2400	2
> 2400	3

Width-dependent components

[*]	**T-O locking components set**; SW < 1300 mm	1
		№
V.01	10 Piece(s)	728756
V.02	10 Piece(s)	728757

Contents:

[*]		#
[1]	Run-up block	1
[2]	Tilt striker	1
[5]	Striker V.01 / V.02	2
[6]	Cam, insertable	2

[5]	Striker		
			№
V.01	9	100 Piece(s)	728918
V.02	9	100 Piece(s)	728920

≤ 1300	–
> 1300	2

[6]	Cam, insertable	
		№
Insertable	100 Piece(s)	334671

≤ 1300	–
> 1300	2

[27]	**Connector bolt, insertable**; SW < 1300 mm		
			№
Insertable connector bolt	For Roto Line AL geared-handle	100 Piece(s)	254601

[40] Connecting rod, fixed, horizontal, bottom (CR5)

→ *from page 274*

4.3.3 T-O with CD hinge | 100 kg

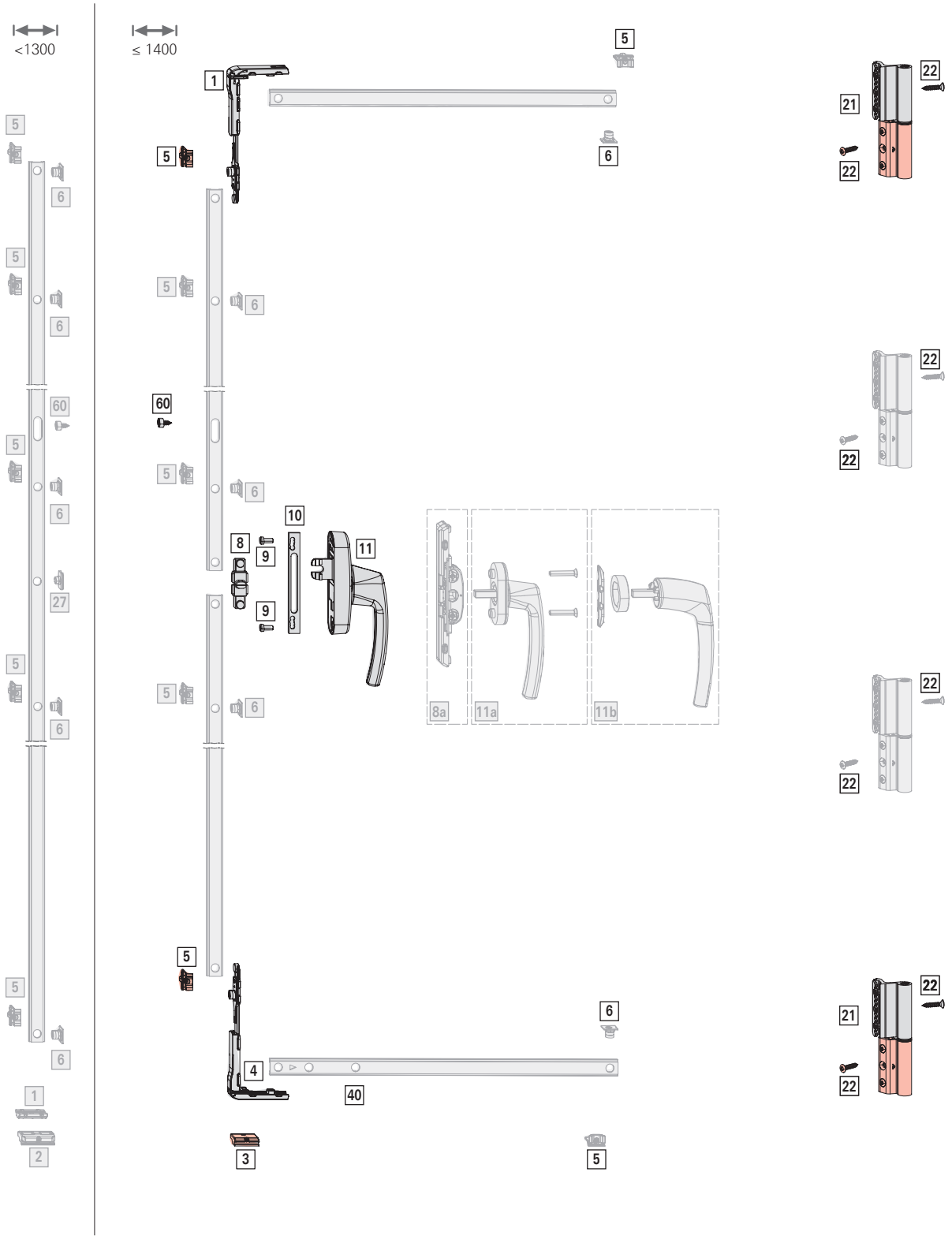

Application range

Sash width **SW**: 200[27] - 1400 mm

Sash height **SH**: 520 - 2700 mm

Sash weight **S.kg**: max. 100 kg

Hinge passage **HP**: > 3.5 mm

Basic set

[21] CD hinge | 100 kg

				№
R01.5	Silver	Left	50 Piece(s)	820741
		Right	50 Piece(s)	820740
R06.2M	Jet black, matt	Left	50 Piece(s)	820747
		Right	50 Piece(s)	820746
R07.2	Traffic white	Left	50 Piece(s)	820749
		Right	50 Piece(s)	820748
SF	Special colour	Left	50 Piece(s)	820751
		Right	50 Piece(s)	820750
Roh	Untreated	–	50 Piece(s)	817167

Size-specific combinations:

	#
520 – 1300	2
1301 – 1800	3
1801 - 2700	4

INFO
Unlike for T-O with CD hinge | 50 kg, only right-hand hinges need to be ordered for DIN R and left-hand hinges for DIN L.

[22] Additional screw

		№
Self-tapping screw ST4.8 x 25	100 Piece(s)	816124
Self-drilling screw ST4.8 x 28	100 Piece(s)	823001

INFO
Two additional screws are required for each CD hinge.

Use a self-tapping screw or self-drilling screw depending on the profile.

[*] T-O locking components set 1

		№
V.01	10 Piece(s)	728743
V.02	10 Piece(s)	728744

Contents:

[*]		
[3]	Run-up wedge V.01 / V.02	1
[4]	Corner drive without blocking device, with retaining fork	2
[5]	Striker V.01 / V.02	2

[60] Locking sleeve 1

		#		№
Locking sleeve	Blocks the entire movement of the espagnolette	1	100 Piece(s)	738549

Espagnolette and connector

[*] T connector set

		№
AL T connector set	10 Piece(s)	728981

Contents:

[*]		
[8]	T connector	1
[9]	Cylinder screw M5 x 12	2

[10] Espagnolette support

			№
Espagnolette support	For Roto Line AL geared-handle	100 Piece(s)	331937

[11] Roto Line AL geared-handle 1

→ CTL_1

Alternatively:

[a]	Window handle – standard	1	→ CTL_1
	Countersunk screw M5 x 30	2	
[b]	Handle without escutcheon	1	→ CTL_1
	Ring for handle without escutcheon	1	
	Mounting plate	1	

Height-dependent components

[5] Striker

			№
V.01	9	100 Piece(s)	728918
V.02	9	100 Piece(s)	728920

≤ 1300	–
1301 – 1800	1
1801 – 2400	2
> 2400	3

[27] With small sash widths, pay attention to the system-specific profile assessment.

[6]	Cam, insertable	
		№
Insertable	100 Piece(s)	334671

≤ 1300	–
1301 – 1800	1
1801 – 2400	2
> 2400	3

Width-dependent components

[*]	**T-O locking components set**; SW < 1300 mm	1
		№
V.01	10 Piece(s)	728756
V.02	10 Piece(s)	728757

Contents:

[*]		#
[1]	Run-up block	1
[2]	Tilt striker	1
[5]	Striker V.01 / V.02	2
[6]	Cam, insertable	2

[5]	Striker		
			№
V.01	9	100 Piece(s)	728918
V.02	9	100 Piece(s)	728920

≤ 1300	–
> 1300	2

[6]	Cam, insertable	
		№
Insertable	100 Piece(s)	334671

≤ 1300	–
> 1300	2

[27]	**Connector bolt, insertable**; SW < 1300 mm		
			№
Insertable connector bolt	For Roto Line AL geared-handle	100 Piece(s)	254601

[40] Connecting rod, fixed, horizontal, bottom (CR5)

→ *from page 274*

4.3.4 T-O | 90 - 130 kg

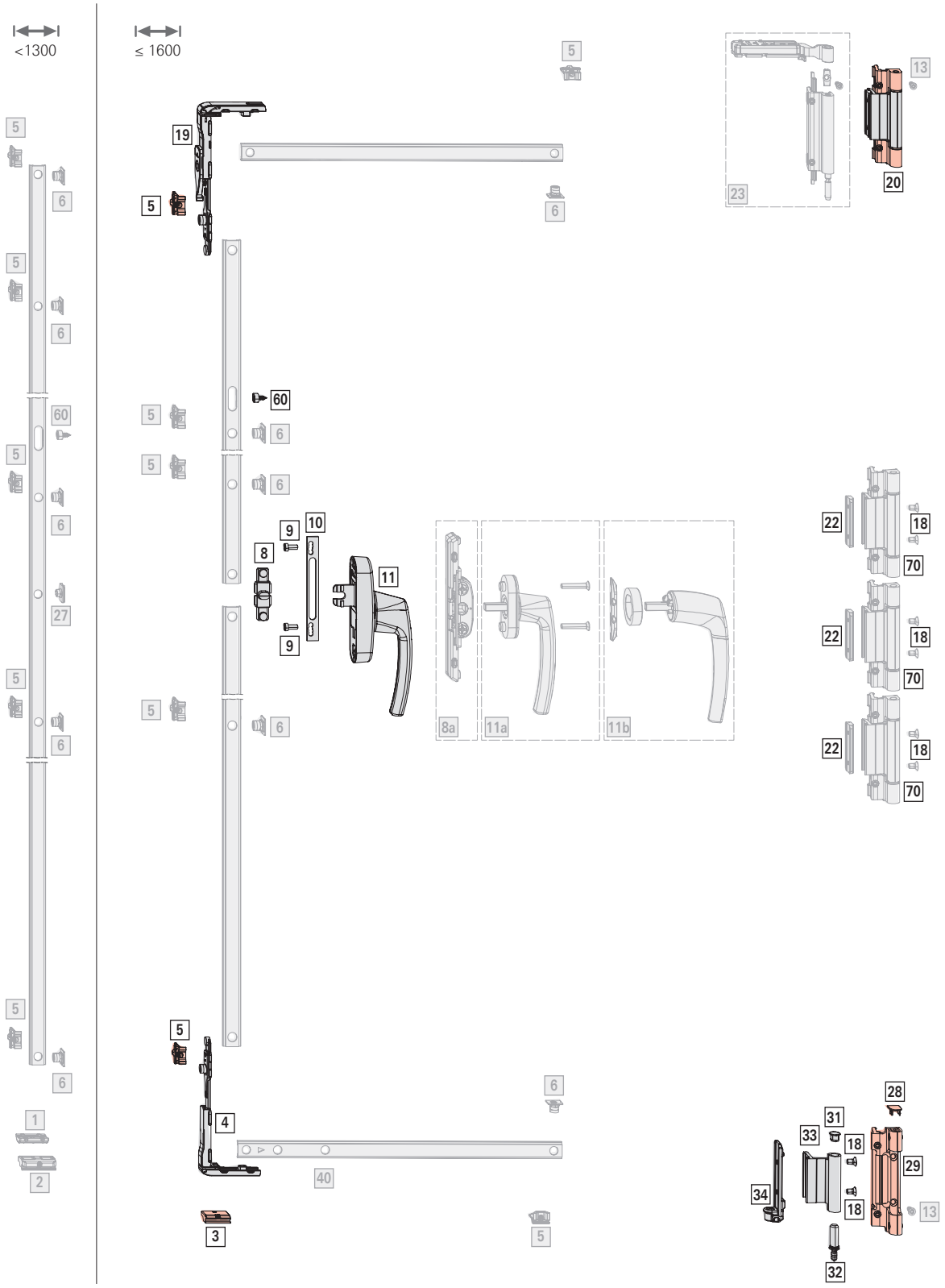

Application range

Sash width **SW**: 200[28] - 1600 mm

Sash height **SH**: 520 - 3000 mm

Sash weight **S.kg**: max. 130 kg

Hinge passage **HP**: > 3.5 / > 5 mm

Basic set

[*] T-O hinge side set | 90 kg; SH ≤ 2700 mm; HP 3.5 mm — 1

Alternatively:

[23] T-O-C hinge side set | 130 kg → *from page 280*

				Nº
Clamp strip version 1	R01.5	Silver	10 Piece(s)	728732
	R05.4	Dark bronze	10 Piece(s)	728733
	R06.2	Jet black	10 Piece(s)	728734
	R07.2	Traffic white	10 Piece(s)	728735
	SF	Special colour	10 Piece(s)	728736
Clamp strip version 2	R01.5	Silver	10 Piece(s)	728737
	R05.4	Dark bronze	10 Piece(s)	728738
	R06.2	Jet black	10 Piece(s)	728739
	R07.2	Traffic white	10 Piece(s)	728740
	SF	Special colour	10 Piece(s)	728741
Clamp strip version 3	SF	Special colour	10 Piece(s)	728742

Contents:

[*]		#
[18]	Countersunk screw M5 x 9	4
[20]	T-O hinge, compl. (including bearing)	1
[22]	Clamping support-strip	1
[28]	Pivot rest end cap	1
[29]	Pivot rest, compl.	1
[31]	Corner hinge end cap	1
[32]	Pivot-rest pin	1
[33]	Corner hinge	1
[34]	Clampable corner bracket, compl.	1

[*] T-O hinge side set | 90 kg; SH > 2700 mm; HP 5 mm — 1

Alternatively:

[23] T-O-C hinge side set | 130 kg → *from page 280*

					Nº
Clamp strip version 1	SF	Special colour	Left	10 Piece(s)	776368
	SF	Special colour	Right	10 Piece(s)	776369
Clamp strip version 2	SF	Special colour	Left	10 Piece(s)	776356
	SF	Special colour	Right	10 Piece(s)	776357

Contents:

[*]		#
[20]	T-O hinge, compl. (including bearing)	1
	Pivot rest end cap	1
	Pivot rest, compl.	1
	Corner hinge, compl. reinforced	1
	Small parts set	1

INFO

Only use bearings / clamp strips which have been approved for the profile. Information can be obtained from Roto sales representatives.

[*] T-O locking components set — 1

		Nº
V.01	10 Piece(s)	728743
V.02	10 Piece(s)	728744

Contents:

[*]		
[3]	Run-up wedge V.01 / V.02	1
[4]	Corner drive without blocking device, with retaining fork	2
[5]	Striker V.01 / V.02	2

[60] Locking sleeve — 1

				Nº
Locking sleeve	Blocks the entire movement of the espagnolette	1	100 Piece(s)	738549

Espagnolette and connector

[*] T connector set

		Nº
AL T connector set	10 Piece(s)	728981

Contents:

[*]		
[8]	T connector	1
[9]	Cylinder screw M5 x 12	2

[10] Espagnolette support

			Nº
Espagnolette support	For Roto Line AL geared-handle	100 Piece(s)	331937

[11] Roto Line AL geared-handle — 1

→ CTL_1

Alternatively:

[28] With small sash widths, pay attention to the system-specific profile assessment.

[a]	Window handle – standard	1	→ CTL_1
	Countersunk screw M5 x 30	2	
[b]	Handle without escutcheon	1	→ CTL_1
	Ring for handle without escutcheon	1	
	Mounting plate	1	

Height-dependent components

[70] T-O / TiS central hinge | 130 kg

Alternatively:
CL sash and frame component → *from page 267*

				№
Clamp strip version 1	R01.5	Silver	50 Piece(s)	728768
	R05.4	Dark bronze	50 Piece(s)	728769
	R06.2	Jet black	50 Piece(s)	728770
	R07.2	Traffic white	50 Piece(s)	728771
	SF	Special colour	50 Piece(s)	728772
Clamp strip version 2	R01.5	Silver	50 Piece(s)	728773
	R05.4	Dark bronze	50 Piece(s)	728774
	R06.2	Jet black	50 Piece(s)	728775
	R07.2	Traffic white	50 Piece(s)	728776
	SF	Special colour	50 Piece(s)	740892
Clamp strip version 3	SF	Special colour	50 Piece(s)	728778

1301 – 1800	1
1801 – 2400	2
> 2400	3

[*] Small parts set

for T-O / TiS central hinge | 130 kg and T-O-C central hinge | 160 kg

		№
Small parts set	100 Piece(s)	728966

Contents:

[*]		#
[22]	Clamping support-strip	1
[18]	Countersunk screw M5 x 9	2

1301 – 1800	1
1801 – 2400	2
> 2400	3

[5] Striker

			№
V.01	9	100 Piece(s)	728918
V.02	9	100 Piece(s)	728920

≤ 1300	–
1301 – 1800	1
1801 – 2400	2
> 2400	3

[6] Cam, insertable

		№
Insertable	100 Piece(s)	334671

≤ 1300	–
1301 – 1800	1
1801 – 2400	2
> 2400	3

[13] Countersunk screw ST4.8 x 16; special head, as an additional means of securing the pivot rest

Alternatively for thread engagement ≤ 6 mm:
Rivet nut set, metric → *from page 288*

			№
Countersunk screw	ST4,8x16	100 Piece(s)	728933

≤ 2400	–
> 2400	1

Width-dependent components

[*] T-O locking components set; SW < 1300 mm — 1

		№
V.01	10 Piece(s)	728756
V.02	10 Piece(s)	728757

Contents:

[*]		#
[1]	Run-up block	1
[2]	Tilt striker	1
[5]	Striker V.01 / V.02	2
[6]	Cam, insertable	2

[5] Striker

			№
V.01	9	100 Piece(s)	728918
V.02	9	100 Piece(s)	728920

≤ 1300	–
> 1300	2

[6] Cam, insertable

		№
Insertable	100 Piece(s)	334671

≤ 1300	–
> 1300	2

[27] Connector bolt, insertable; SW < 1300 mm

			№
Insertable connector bolt	For Roto Line AL geared-handle	100 Piece(s)	254601

[40] Connecting rod, fixed, horizontal, bottom (CR5)

→ *from page 274*

Weight-dependent components

INFO

From S.kg > 90 kg, the use of a countersunk screw ST4.8 x 16 is mandatory as an additional means of securing the pivot rest (see [13] Height-dependent components).

4.3.5 T-O | RC 2 | 90 - 130 kg

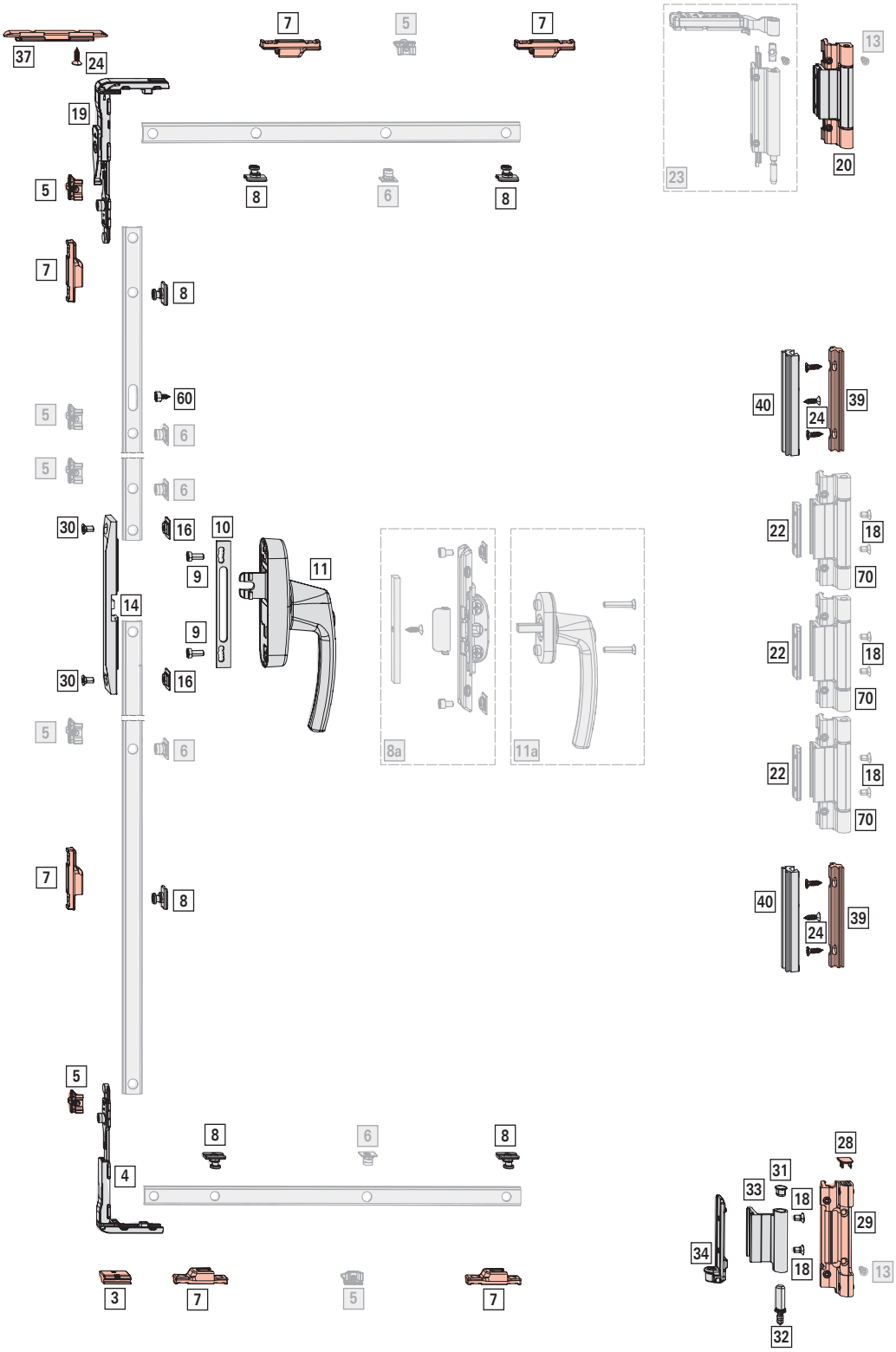

Application range

Sash width **SW**: 515 - 1600 mm

Sash height **SH**: 770 - 3000 mm

Sash weight **S.kg**: max. 130 kg

Hinge passage **HP**: > 3.5 / > 5 mm

Basic set

[*] T-O hinge side set | 90 kg; SH ≤ 2700 mm; HP 3.5 mm — 1

Alternatively:

[23] T-O-C hinge side set | 130 kg → *from page 280*

				№
Clamp strip version 1	R01.5	Silver	10 Piece(s)	728732
	R05.4	Dark bronze	10 Piece(s)	728733
	R06.2	Jet black	10 Piece(s)	728734
	R07.2	Traffic white	10 Piece(s)	728735
	SF	Special colour	10 Piece(s)	728736
Clamp strip version 2	R01.5	Silver	10 Piece(s)	728737
	R05.4	Dark bronze	10 Piece(s)	728738
	R06.2	Jet black	10 Piece(s)	728739
	R07.2	Traffic white	10 Piece(s)	728740
	SF	Special colour	10 Piece(s)	728741
Clamp strip version 3	SF	Special colour	10 Piece(s)	728742

Contents:

[*]		#
[18]	Countersunk screw M5 x 9	4
[20]	T-O hinge, compl. (including bearing)	1
[22]	Clamping support-strip	1
[28]	Pivot rest end cap	1
[29]	Pivot rest, compl.	1
[31]	Corner hinge end cap	1
[32]	Pivot-rest pin	1
[33]	Corner hinge	1
[34]	Clampable corner bracket, compl.	1

[*] T-O hinge side set | 90 kg; SH > 2700 mm; HP 5 mm — 1

Alternatively:

[23] T-O-C hinge side set | 130 kg → *from page 280*

					№
Clamp strip version 1	SF	Special colour	Left	10 Piece(s)	776368
	SF	Special colour	Right	10 Piece(s)	776369
Clamp strip version 2	SF	Special colour	Left	10 Piece(s)	776356
	SF	Special colour	Right	10 Piece(s)	776357

Contents:

[*]		#
[20]	T-O hinge, compl. (including bearing)	1
	Pivot rest end cap	1
	Pivot rest, compl.	1
	Corner hinge, compl. reinforced	1
	Small parts set	1

INFO

Only use bearings / clamp strips which have been approved for the profile. Information can be obtained from Roto sales representatives.

[*] SEC hinge lock set — 2

		№
V.01	10 Piece(s)	728940
V.02	10 Piece(s)	728941

Contents:

[*]		#
[24]	Countersunk screw ST4.8 x 16	3
[39]	Frame component V.01 / V.02	1
[40]	Sash component	1

[*] T-O locking components set — 1

		№
V.01	10 Piece(s)	728743
V.02	10 Piece(s)	728744

Contents:

[*]		
[3]	Run-up wedge V.01 / V.02	1
[4]	Corner drive without blocking device, with retaining fork	2
[5]	Striker V.01 / V.02	2

[*] SEC rebate-clearance reduction set — 1

Large packages → *from page 275*

			№
SEC rebate-clearance reduction set	For corner drives	10 Piece(s)	728950

[*]		#
[24]	Countersunk screw ST4.8 x 16	1
[37]	SEC rebate-clearance reduction CD	1

[60] Locking sleeve — 1

				№
Locking sleeve	Blocks the entire movement of the espagnolette	1	100 Piece(s)	738549

[7]	SEC striker		6
V.01	9	100 Piece(s)	212637
V.02	9	100 Piece(s)	212638

[8]	SEC cam	RC 2	6
Insertable		100 Piece(s)	447245

Espagnolette and connector

[*]	SEC espagnolette protection set		1	
	Large packages			→ *from page 271*
	Alternatively:			
[8a]	SEC flush-encased gearbox set		1	→ *from page 282*
SEC espagnolette protection set		10 Piece(s)		728952

Contents:

[*]		#
[14]	SEC espagnolette protection	1
[16]	SEC connector	2
[30]	Countersunk screw M5 x 10	2

[9]	Cylinder screw M5 x 12		2
Cylinder screw	M5x12	100 Piece(s)	728925

[10]	Espagnolette support		1
Espagnolette support	For Roto Line AL geared-handle	100 Piece(s)	331937

[11]	Roto Line AL geared-handle, lockable		1	→ CTL_1
	Alternatively:			
[a]	Window handle – standard, lockable		1	→ CTL_1
	Countersunk screw M5 x 30		2	

Height-dependent components

[70]	T-O / TiS central hinge | 130 kg
	Alternatively:

CL sash and frame component → *from page 267*				
Clamp strip version 1	R01.5	Silver	50 Piece(s)	728768
	R05.4	Dark bronze	50 Piece(s)	728769
	R06.2	Jet black	50 Piece(s)	728770
	R07.2	Traffic white	50 Piece(s)	728771
	SF	Special colour	50 Piece(s)	728772
Clamp strip version 2	R01.5	Silver	50 Piece(s)	728773
	R05.4	Dark bronze	50 Piece(s)	728774
	R06.2	Jet black	50 Piece(s)	728775
	R07.2	Traffic white	50 Piece(s)	728776
	SF	Special colour	50 Piece(s)	740892
Clamp strip version 3	SF	Special colour	50 Piece(s)	728778

1301 – 1800	1
1801 – 2400	2
> 2400	3

[*]	Small parts set
	for T-O / TiS central hinge | 130 kg and T-O-C central hinge | 160 kg
Small parts set	100 Piece(s) 728966

Contents:

[*]		#
[22]	Clamping support-strip	1
[18]	Countersunk screw M5 x 9	2

1301 – 1800	1
1801 – 2400	2
> 2400	3

[5]	Striker		
V.01	9	100 Piece(s)	728918
V.02	9	100 Piece(s)	728920

≤ 1300	–
1301 – 1800	1
1801 – 2400	2
> 2400	3

[6] Cam, insertable		
		№
Insertable	100 Piece(s)	334671

≤ 1300	–
1301 – 1800	1
1801 – 2400	2
> 2400	3

[13] Countersunk screw ST4.8 x 16; special head, as an additional means of securing the pivot rest Alternatively for thread engagement ≤ 6 mm: Rivet nut set, metric → *from page 288*			
			№
Countersunk screw	ST4,8x16	100 Piece(s)	728933

≤ 2400	–
> 2400	1

Width-dependent components

[5] Striker			
			№
V.01	9	100 Piece(s)	728918
V.02	9	100 Piece(s)	728920

≤ 1300	–
> 1300	2

[6] Cam, insertable		
		№
Insertable	100 Piece(s)	334671

≤ 1300	–
> 1300	2

Weight-dependent components

INFO

From S.kg > 90 kg, the use of a countersunk screw ST4.8 x 16 is mandatory as an additional means of securing the pivot rest (see [13] Height-dependent components).

4.3.6 T-O | RC 3 | 90 - 130 kg

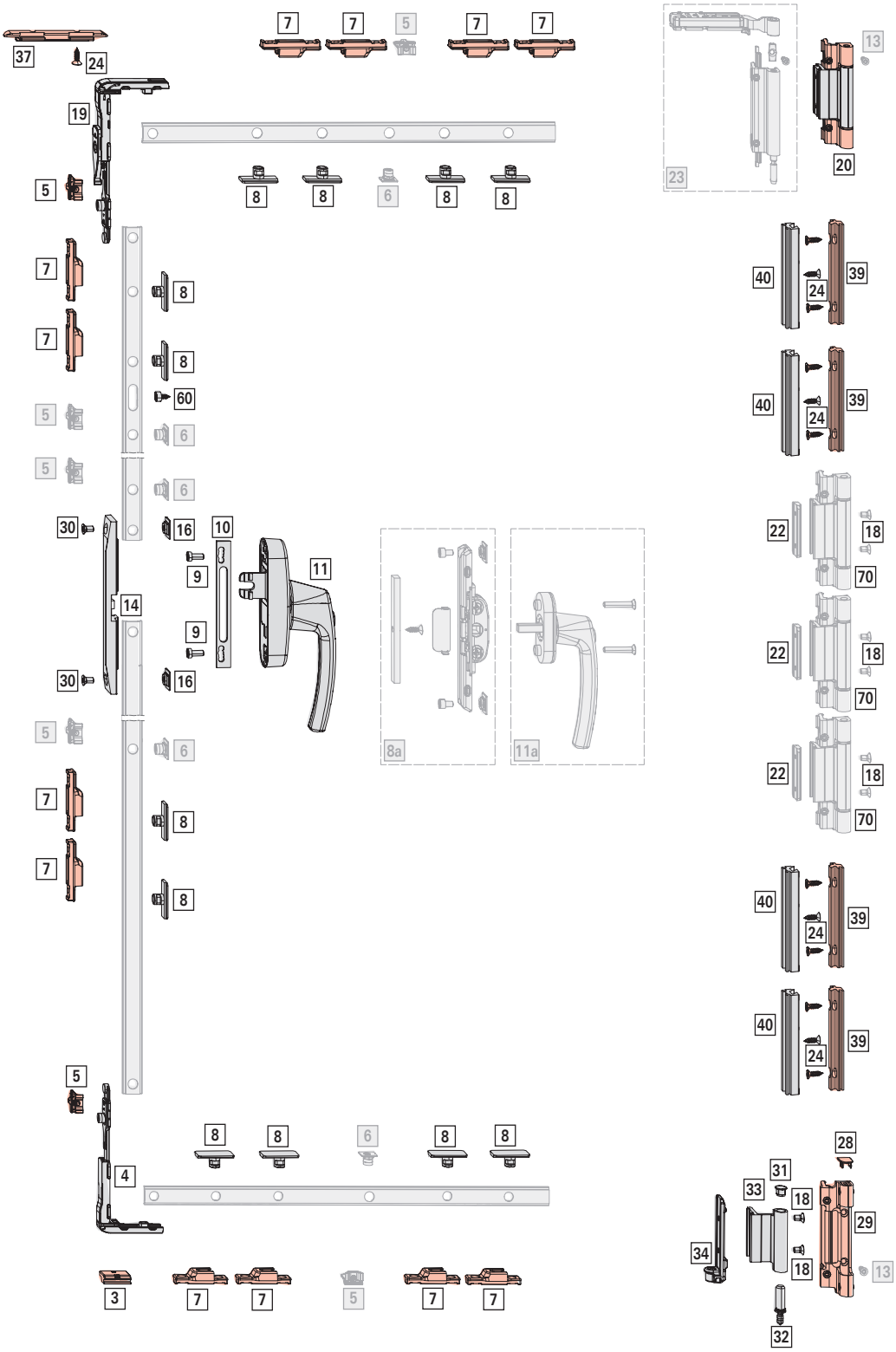

Application range

Sash width **SW**: 665 - 1600 mm

Sash height **SH**: 920 - 3000 mm

Sash weight **S.kg**: max. 130 kg

Hinge passage **HP**: > 3.5 / > 5 mm

Basic set

[*] T-O hinge side set | 90 kg; SH ≤ 2700 mm; HP 3.5 mm — 1

Alternatively:

[23] T-O-C hinge side set | 130 kg → *from page 280*

				№
Clamp strip version 1	R01.5	Silver	10 Piece(s)	728732
	R05.4	Dark bronze	10 Piece(s)	728733
	R06.2	Jet black	10 Piece(s)	728734
	R07.2	Traffic white	10 Piece(s)	728735
	SF	Special colour	10 Piece(s)	728736
Clamp strip version 2	R01.5	Silver	10 Piece(s)	728737
	R05.4	Dark bronze	10 Piece(s)	728738
	R06.2	Jet black	10 Piece(s)	728739
	R07.2	Traffic white	10 Piece(s)	728740
	SF	Special colour	10 Piece(s)	728741
Clamp strip version 3	SF	Special colour	10 Piece(s)	728742

Contents:

[*]		#
[18]	Countersunk screw M5 x 9	4
[20]	T-O hinge, compl. (including bearing)	1
[22]	Clamping support-strip	1
[28]	Pivot rest end cap	1
[29]	Pivot rest, compl.	1
[31]	Corner hinge end cap	1
[32]	Pivot-rest pin	1
[33]	Corner hinge	1
[34]	Clampable corner bracket, compl.	1

[*] T-O hinge side set | 90 kg; SH > 2700 mm; HP 5 mm — 1

Alternatively:

[23] T-O-C hinge side set | 130 kg → *from page 280*

					№
Clamp strip version 1	SF	Special colour	Left	10 Piece(s)	776368
	SF	Special colour	Right	10 Piece(s)	776369
Clamp strip version 2	SF	Special colour	Left	10 Piece(s)	776356
	SF	Special colour	Right	10 Piece(s)	776357

Contents:

[*]		#
[20]	T-O hinge, compl. (including bearing)	1
	Pivot rest end cap	1
	Pivot rest, compl.	1
	Corner hinge, compl. reinforced	1
	Small parts set	1

INFO

Only use bearings / clamp strips which have been approved for the profile. Information can be obtained from Roto sales representatives.

[*] SEC hinge lock set — 4

		№
V.01	10 Piece(s)	728940
V.02	10 Piece(s)	728941

Contents:

[*]		#
[24]	Countersunk screw ST4.8 x 16	3
[39]	Frame component V.01 / V.02	1
[40]	Sash component	1

[*] T-O locking components set — 1

		№
V.01	10 Piece(s)	728743
V.02	10 Piece(s)	728744

Contents:

[*]		
[3]	Run-up wedge V.01 / V.02	1
[4]	Corner drive without blocking device, with retaining fork	2
[5]	Striker V.01 / V.02	2

[*] SEC rebate-clearance reduction set — 1

Large packages → *from page 275*

			№
SEC rebate-clearance reduction set	For corner drives	10 Piece(s)	728950

[*]		#
[24]	Countersunk screw ST4.8 x 16	1
[37]	SEC rebate-clearance reduction CD	1

[60] Locking sleeve — 1

				№
Locking sleeve	Blocks the entire movement of the espagnolette	1	100 Piece(s)	738549

[7] SEC striker			12
			№
V.01	9	100 Piece(s)	212637
V.02	9	100 Piece(s)	212638

[8] SEC cam	RC 3	12
		№
Insertable	100 Piece(s)	443530

Espagnolette and connector

[*]	SEC espagnolette protection set		1
	Large packages		→ *from page 271*
	Alternatively:		
[8a]	SEC flush-encased gearbox set	1	→ *from page 282*

		№
SEC espagnolette protection set	10 Piece(s)	728952

Contents:

[*]		#
[14]	SEC espagnolette protection	1
[16]	SEC connector	2
[30]	Countersunk screw M5 x 10	2

[9] Cylinder screw M5 x 12			2
			№
Cylinder screw	M5x12	100 Piece(s)	728925

[10] Espagnolette support			1
			№
Espagnolette support	For Roto Line AL geared-handle	100 Piece(s)	331937

[11]	Roto Line AL geared-handle, lockable		1 → CTL_1
	Alternatively:		
[a]	Window handle – standard, lockable	1	→ CTL_1
	Countersunk screw M5 x 30	2	

Height-dependent components

[70] T-O / TiS central hinge | 130 kg
Alternatively:

CL sash and frame component → *from page 267*				
				№
Clamp strip version 1	R01.5	Silver	50 Piece(s)	728768
	R05.4	Dark bronze	50 Piece(s)	728769
	R06.2	Jet black	50 Piece(s)	728770
	R07.2	Traffic white	50 Piece(s)	728771
	SF	Special colour	50 Piece(s)	728772
Clamp strip version 2	R01.5	Silver	50 Piece(s)	728773
	R05.4	Dark bronze	50 Piece(s)	728774
	R06.2	Jet black	50 Piece(s)	728775
	R07.2	Traffic white	50 Piece(s)	728776
	SF	Special colour	50 Piece(s)	740892
Clamp strip version 3	SF	Special colour	50 Piece(s)	728778

1301 – 1800	1
1801 – 2400	2
> 2400	3

[*] Small parts set		
for T-O / TiS central hinge | 130 kg and T-O-C central hinge | 160 kg		
		№
Small parts set	100 Piece(s)	728966

Contents:

[*]		#
[22]	Clamping support-strip	1
[18]	Countersunk screw M5 x 9	2

1301 – 1800	1
1801 – 2400	2
> 2400	3

[5] Striker			
			№
V.01	9	100 Piece(s)	728918
V.02	9	100 Piece(s)	728920

≤ 1300	–
1301 – 1800	1
1801 – 2400	2
> 2400	3

[6] Cam, insertable		
		№
Insertable	100 Piece(s)	334671

≤ 1300	–
1301 – 1800	1
1801 – 2400	2
> 2400	3

[13] Countersunk screw ST4.8 x 16; special head, as an additional means of securing the pivot rest Alternatively for thread engagement ≤ 6 mm: Rivet nut set, metric → *from page 288*			
			№
Countersunk screw	ST4,8x16	100 Piece(s)	728933

≤ 2400	–
> 2400	1

Width-dependent components

[5] Striker			
			№
V.01	9	100 Piece(s)	728918
V.02	9	100 Piece(s)	728920

≤ 1300	–
> 1300	2

[6] Cam, insertable		
		№
Insertable	100 Piece(s)	334671

≤ 1300	–
> 1300	2

Weight-dependent components

INFO

From S.kg > 90 kg, the use of a countersunk screw ST4.8 x 16 is mandatory as an additional means of securing the pivot rest (see [13] Height-dependent components).

4.3.7 T-O | accessible | 90 - 130 kg

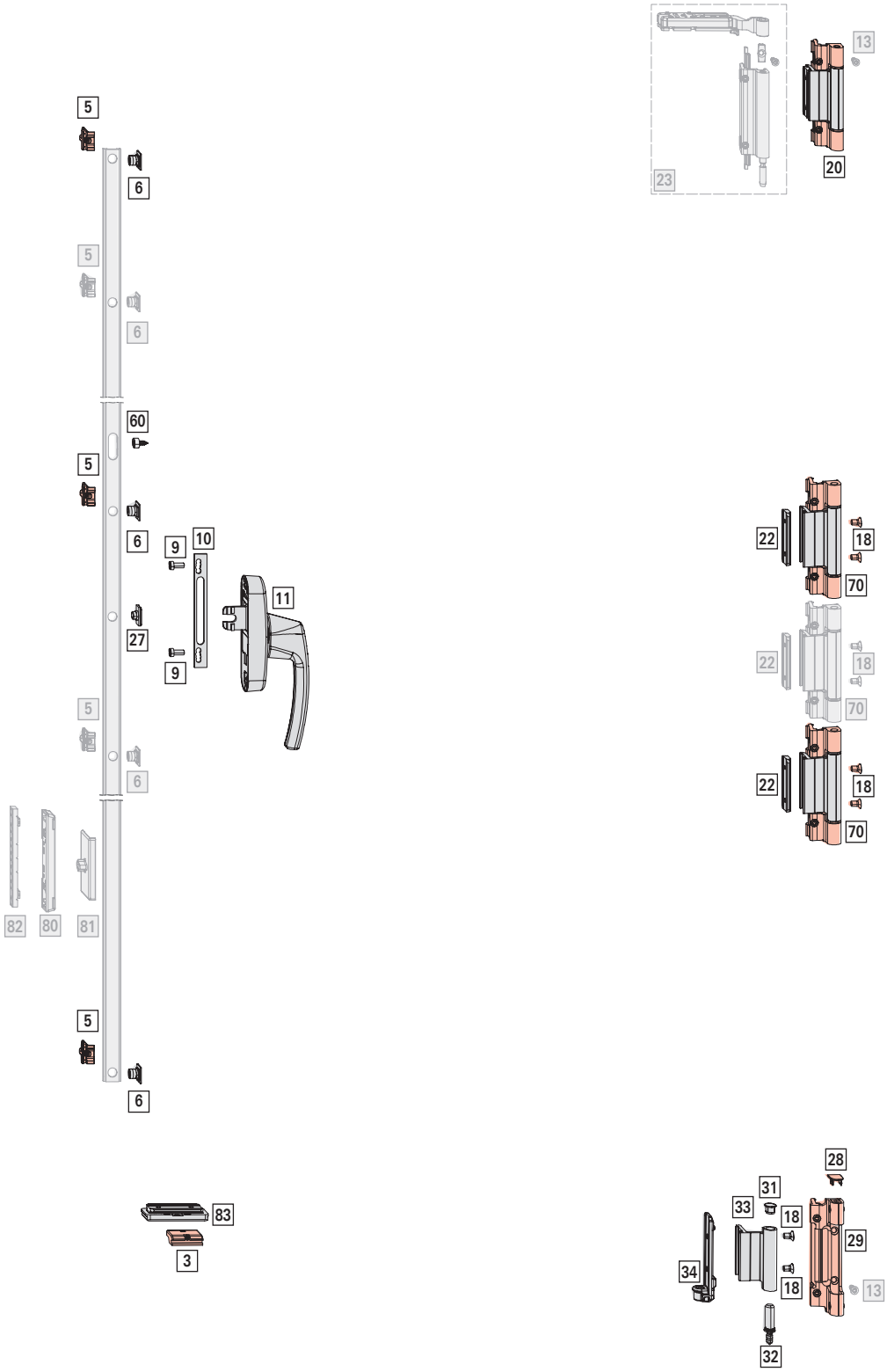

Application range

Sash width **SW**: 800 - 1300 mm

Sash height **SH**: 1800 - 2700 mm

Sash weight **S.kg**: max. 130 kg

Hinge passage **HP**: > 3.5 mm

Basic set

[*] T-O hinge side set | 90 kg; SH ≤ 2700 mm; HP 3.5 mm — 1

Alternatively:

[23] T-O-C hinge side set | 130 kg → *from page 280*

				Nº
Clamp strip version 1	R01.5	Silver	10 Piece(s)	728732
	R05.4	Dark bronze	10 Piece(s)	728733
	R06.2	Jet black	10 Piece(s)	728734
	R07.2	Traffic white	10 Piece(s)	728735
	SF	Special colour	10 Piece(s)	728736
Clamp strip version 2	R01.5	Silver	10 Piece(s)	728737
	R05.4	Dark bronze	10 Piece(s)	728738
	R06.2	Jet black	10 Piece(s)	728739
	R07.2	Traffic white	10 Piece(s)	728740
	SF	Special colour	10 Piece(s)	728741
Clamp strip version 3	SF	Special colour	10 Piece(s)	728742

Contents:

[*]		#
[18]	Countersunk screw M5 x 9	4
[20]	T-O hinge, compl. (including bearing)	1
[22]	Clamping support-strip	1
[28]	Pivot rest end cap	1
[29]	Pivot rest, compl.	1
[31]	Corner hinge end cap	1
[32]	Pivot-rest pin	1
[33]	Corner hinge	1
[34]	Clampable corner bracket, compl.	1

INFO
Only use bearings / clamp strips which have been approved for the profile. Information can be obtained from Roto sales representatives.

[70] T-O central hinge | 130 kg — 2

Alternatively:

CL sash and frame component → *from page 267* — 3

				Nº
Clamp strip version 1	R01.5	Silver	50 Piece(s)	728768
	R05.4	Dark bronze	50 Piece(s)	728769
	R06.2	Jet black	50 Piece(s)	728770
	R07.2	Traffic white	50 Piece(s)	728771
	SF	Special colour	50 Piece(s)	728772
Clamp strip version 2	R01.5	Silver	50 Piece(s)	728773
	R05.4	Dark bronze	50 Piece(s)	728774
	R06.2	Jet black	50 Piece(s)	728775
	R07.2	Traffic white	50 Piece(s)	728776
	SF	Special colour	50 Piece(s)	740892
Clamp strip version 3	SF	Special colour	50 Piece(s)	728778

[*] Small parts set — 2

for T-O central hinge | 130 kg

		Nº
Small parts set	100 Piece(s)	728966

Contents:

[*]		#
[22]	Clamping support-strip	1
[18]	Countersunk screw M5 x 9	2

[*] Run-up block set — 1

INFO
For floating mullions, the floating-mullion run-up block set (see second opening sash) replaces the run-up block set.

		Nº
V.01	1 Piece(s)	817136
V.02	1 Piece(s)	817138

Contents:

[*]		#
[3]	Run-up wedge V.01 / V.02	1
[83]	Run-up block 6.5 (two-part)	1

[5] Striker — 3

			Nº
V.01	9	100 Piece(s)	728918
V.02	9	100 Piece(s)	728920

[6] Cam, insertable — 3

		Nº
Insertable	100 Piece(s)	334671

[60] Locking sleeve — 1

				Nº
Locking sleeve	Blocks the entire movement of the espagnolette	1	100 Piece(s)	738549

Espagnolette and connector

[27] Connector bolt, insertable; SW < 1300 mm

			Nº
Insertable connector bolt	For Roto Line AL geared-handle	100 Piece(s)	254601

[9] Cylinder screw M5 x 12 2

			Nº
Cylinder screw	M5x12	100 Piece(s)	728925

[10] Espagnolette support

			Nº
Espagnolette support	For Roto Line AL geared-handle	100 Piece(s)	331937

[11] Roto Line AL geared-handle 1

→ CTL_1

Height-dependent components

[70] T-O / TiS central hinge | 130 kg
Alternatively:
CL sash and frame component → *from page 267*

				Nº
Clamp strip version 1	R01.5	Silver	50 Piece(s)	728768
	R05.4	Dark bronze	50 Piece(s)	728769
	R06.2	Jet black	50 Piece(s)	728770
	R07.2	Traffic white	50 Piece(s)	728771
	SF	Special colour	50 Piece(s)	728772
Clamp strip version 2	R01.5	Silver	50 Piece(s)	728773
	R05.4	Dark bronze	50 Piece(s)	728774
	R06.2	Jet black	50 Piece(s)	728775
	R07.2	Traffic white	50 Piece(s)	728776
	SF	Special colour	50 Piece(s)	740892
Clamp strip version 3	SF	Special colour	50 Piece(s)	728778

≤ 1300	–
> 1300	1

[*] Small parts set
for T-O / TiS central hinge | 130 kg and T-O-C central hinge | 160 kg

		Nº
Small parts set	100 Piece(s)	728966

Contents:

[*]		#
[22]	Clamping support-strip	1
[18]	Countersunk screw M5 x 9	2

≤ 1300	–
> 1300	1

[5] Striker

			Nº
V.01	9	100 Piece(s)	728918
V.02	9	100 Piece(s)	728920

≤ 1800	–
1801 – 2400	1
> 2400	2

[6] Cam, insertable

		Nº
Insertable	100 Piece(s)	334671

≤ 1800	–
1801 – 2400	1
> 2400	2

[13] Countersunk screw ST4.8 x 16; special head, as an additional means of securing the pivot rest
Alternatively for thread engagement ≤ 6 mm:
Rivet nut set, metric → *from page 288*

			Nº
Countersunk screw	ST4,8x16	100 Piece(s)	728933

≤ 2400	–
> 2400	2

Weight-dependent components

INFO
From S.kg > 90 kg, the use of a countersunk screw ST4.8 x 16 is mandatory as an additional means of securing the pivot rest (see [13] Height-dependent components).

Optional

[*]	Balcony door bullet catch set	1

		№
Balcony door bullet catch set	10 Piece(s)	728714

Contents:

[*]		#
[80]	Balcony door bullet catch	1
[81]	Balcony door bullet-catch cam	1
[82]	Packer	1
Not sh.	Self-tapping screw ST3.9 x 25	3

4.3.8 T-O-C | 160 kg

Application range

Sash width **SW**: 200[29] - 1600 mm

Sash height **SH**: 520 - 3000 mm

Sash weight **S.kg**: max. 160 kg

Hinge passage **HP**: > 5 mm

Basic set

[*] T-O-C hinge side set | 160 kg 1

				№
Clamp strip version 1	R01.5	Silver	Left	793443
			Right	793442
	R05.4	Dark bronze	Left	793449
			Right	793448
	R06.2	Jet black	Left	793445
			Right	793444
	R07.2	Traffic white	Left	793447
			Right	793446
	SF	Special colour	Left	793451
			Right	793450
	Roh	Untreated	Left	793453
			Right	793452
Clamp strip version 2	R01.5	Silver	Left	793457
			Right	793456
	R05.4	Dark bronze	Left	793463
			Right	793462
	R06.2	Jet black	Left	793459
			Right	793458
	R07.2	Traffic white	Left	793461
			Right	793460
	SF	Special colour	Left	793465
			Right	793464
	Roh	Untreated	Left	793467
			Right	793466
Clamp strip version 3	SF	Special colour	Left	793469
			Right	793468
	Roh	Untreated	Left	793471
			Right	793470

INFO
Untreated components for users who intend to paint the component themselves.

Contents:

[*]		#
[13]	Countersunk screw ST4.8 x 16; special head	3
[20]	Turn-Only stay hinge, compl.	1
[22]	Stay bearing, compl. | 160 kg	1
[23]	Fixing connecting-link | 130 kg	1
[25]	Counter bearing	1
[28]	Corner hinge, compl. | 160 kg	1
[29]	Pivot rest, compl. | 160 kg	1
[31]	Pivot rest end cap	1
[33]	Fixing connecting-link | 160 kg	1

INFO
Only use bearings / clamp strips which have been approved for the profile. Information can be obtained from Roto sales representatives.

[*] T-O-C locking components set 1

		№
V.01	10 Piece(s)	775004
V.02	10 Piece(s)	775005

Contents:

[*]		#
[3]	Run-up wedge V.01 / V.02	1
[4]	Corner drive without blocking device, with retaining fork	2
[5]	Striker V.01 / V.02	2
[19]	Corner drive with blocking device and retaining fork	1

[60] Locking sleeve 1

				№
Locking sleeve	Blocks the entire movement of the espagnolette	1	100 Piece(s)	738549

Espagnolette and connector

[*] T connector set

		№
AL T connector set	10 Piece(s)	728981

Contents:

[*]		
[8]	T connector	1
[9]	Cylinder screw M5 x 12	2

[10] Espagnolette support

			№
Espagnolette support	For Roto Line AL geared-handle	100 Piece(s)	331937

[11] Roto Line AL geared-handle 1 → CTL_1

	Alternatively:		
[a]	Window handle – standard	1	→ CTL_1
	Countersunk screw M5 x 30	2	
[b]	Handle without escutcheon	1	→ CTL_1
	Ring for handle without escutcheon	1	
	Mounting plate	1	

[29] With small sash widths, pay attention to the system-specific profile assessment.

Height-dependent components

[70] T-O-C central hinge | 160 kg

Alternatively:
CL sash and frame component → *from page 267*

				Nº
Clamp strip version 1	R01.5	Silver	50 Piece(s)	728871
	R05.4	Dark bronze	50 Piece(s)	728872
	R06.2	Jet black	50 Piece(s)	728873
	R07.2	Traffic white	50 Piece(s)	728874
	SF	Special colour	50 Piece(s)	728875
	Roh	Untreated	10 Piece(s)	793472
Clamp strip version 2	R01.5	Silver	50 Piece(s)	728876
	R05.4	Dark bronze	50 Piece(s)	728877
	R06.2	Jet black	50 Piece(s)	728878
	R07.2	Traffic white	50 Piece(s)	728879
	SF	Special colour	50 Piece(s)	728880
	Roh	Untreated	10 Piece(s)	793473
Clamp strip version 3	SF	Special colour	10 Piece(s)	728882
	Roh	Untreated	10 Piece(s)	793474

INFO
Untreated components for users who intend to paint the component themselves.

1301 – 1800	1
1801 – 2400	2
> 2400	3

[*] Small parts set

for T-O / TiS central hinge | 130 kg and T-O-C central hinge | 160 kg

		Nº
Small parts set	100 Piece(s)	728966

Contents:

[*]		#
[22]	Clamping support-strip	1
[18]	Countersunk screw M5 x 9	2

1301 – 1800	1
1801 – 2400	2
> 2400	3

[3] Run-up wedge

			Nº
Run-up wedge	V.01	100 Piece(s)	684282
	V.02	100 Piece(s)	684283

≤ 1300	–
> 1300	1

[5] Striker

			Nº
V.01	9	100 Piece(s)	728918
V.02	9	100 Piece(s)	728920

≤ 1300	–
1301 – 1800	1
1801 – 2400	2
> 2400	3

[6] Cam, insertable

		Nº
Insertable	100 Piece(s)	334671

≤ 1300	–
1301 – 1800	1
1801 – 2400	2
> 2400	3

Width-dependent components

[*] T-O locking components set; SW < 1300 mm — 1

		Nº
V.01	10 Piece(s)	728756
V.02	10 Piece(s)	728757

Contents:

[*]		#
[1]	Run-up block	1
[2]	Tilt striker	1
[5]	Striker V.01 / V.02	2
[6]	Cam, insertable	2

[5] Striker

			Nº
V.01	9	100 Piece(s)	728918
V.02	9	100 Piece(s)	728920

≤ 1300	–
> 1300	2

[6] Cam, insertable

		Nº
Insertable	100 Piece(s)	334671

≤ 1300	–
> 1300	2

[27] Connector bolt, insertable; SW < 1300 mm

Insertable connector bolt	For Roto Line AL geared-handle	100 Piece(s)	254601

[40] Connecting rod, fixed, horizontal, bottom (CR5)

→ *from page 274*

4.3.9 T-O | 200 kg

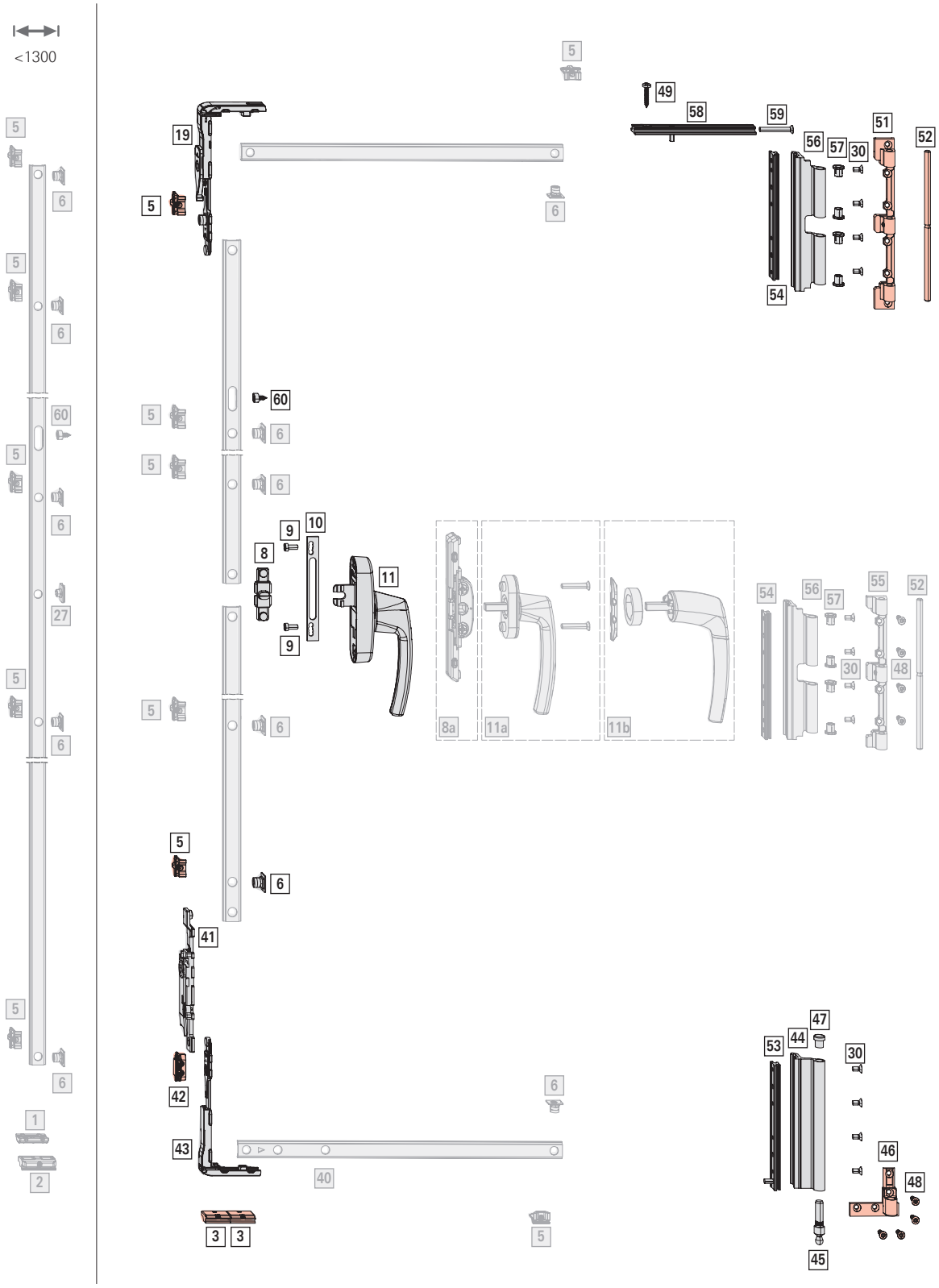
<1300
5
6
60
27
1
2
19
49
58
59
51
52
56
57
30
54
9
10
8
11
8a
11a
11b
55
48
41
42
43
40
3
47
44
53
46
45

Application range

Sash width **SW**: 200[30] - 1600 mm

Sash height **SH**: 520 - 3000 mm

Sash weight **S.kg**: max. 200 kg

Hinge passage **HP**: > 7 mm

Basic set

[*] T-O hinge side set | 200 kg — 1

				Nº
SF	Special colour	Left	10 Piece(s)	775007
		Right	10 Piece(s)	775006

Contents:

[*]		#
[30]	Countersunk screw M5 x 10	8
[44]	Corner hinge | 200 kg	1
[45]	Pivot-rest pin | 200 kg	1
[46]	Pivot rest, compl. | 200 kg	1
[47]	Corner hinge end cap (colour can be selected)	2
[48]	Countersunk screw ST4.8 x 19	10
[49]	Self-tapping screw ST4.8 x 25	1
[51]	Stay bearing | 200 kg	1
[52]	Bearing pin | 200 kg	1
[53]	Clamping support-strip with pin | 200 kg	1
[54]	Clamping support-strip | 200 kg	1
[56]	Turn-Only hinge | 200 kg	1
[57]	Turn-Only bearing bush	4
[58]	Clamping block | 200 kg	1
[59]	Countersunk screw M5 x 40	1

[*] T-O SL locking components set — 1

		Nº
V.01	10 Piece(s)	798205
V.02	10 Piece(s)	798206

Contents:

[*]		#
[3]	Run-up wedge V.01 / V.02	2
[5]	Striker V.01 / V.02	2
[6]	Cam, insertable	1
[19]	Corner drive with blocking device and retaining fork	1
[43]	Corner drive for sash lifter with retaining fork	1

[*] Sash lifter set; for T-O SL locking components set

		Nº
Left	20 Piece(s)	775021
Right	20 Piece(s)	775020

Contents:

[*]		#
[41]	Coupler component with run-up block	1
[42]	Stop	1

[60] Locking sleeve — 1

				Nº
Locking sleeve	Blocks the entire movement of the espagnolette	1	100 Piece(s)	738549

Espagnolette and connector

[*] T connector set

		Nº
AL T connector set	10 Piece(s)	728981

Contents:

[*]		
[8]	T connector	1
[9]	Cylinder screw M5 x 12	2

[10] Espagnolette support

			Nº
Espagnolette support	For Roto Line AL geared-handle	100 Piece(s)	331937

[11] Roto Line AL geared-handle — 1

→ CTL_1

Alternatively:

[a]	Window handle – standard	1	→ CTL_1
	Countersunk screw M5 x 30	2	
[b]	Handle without escutcheon	1	→ CTL_1
	Ring for handle without escutcheon	1	
	Mounting plate	1	

Height-dependent components

[*] T-O central hinge | 200 kg

			Nº
SF	Special colour	1 Piece(s)	775008

Contents:

[*]		#
[30]	Countersunk screw M5 x 10	4
[48]	Countersunk screw ST4.8 x 19	4
[52]	T-O bearing pin | 200 kg	1
[54]	Clamping support-strip | 200 kg	1
[55]	CL T-O bearing | 200 kg	1
[56]	Turn-Only hinge | 200 kg	1
[57]	T-O Turn-Only bearing bush	4

≤ 1300	–
> 1300	1

[30] With small sash widths, pay attention to the system-specific profile assessment.

[5] Striker

			Nº
V.01	9	100 Piece(s)	728918
V.02	9	100 Piece(s)	728920

≤ 1300	–
1301 – 1800	1
1801 – 2400	2
> 2400	3

[6] Cam, insertable

		Nº
Insertable	100 Piece(s)	334671

≤ 1300	–
1301 – 1800	1
1801 – 2400	2
> 2400	3

Width-dependent components

[*] T-O locking components set; SW < 1300 mm

1

		Nº
V.01	10 Piece(s)	728756
V.02	10 Piece(s)	728757

Contents:

[*]		#
[1]	Run-up block	1
[2]	Tilt striker	1
[5]	Striker V.01 / V.02	2
[6]	Cam, insertable	2

[5] Striker

			Nº
V.01	9	100 Piece(s)	728918
V.02	9	100 Piece(s)	728920

≤ 1300	–
> 1300	2

[6] Cam, insertable

		Nº
Insertable	100 Piece(s)	334671

≤ 1300	–
> 1300	2

[27] Connector bolt, insertable; SW < 1300 mm

			Nº
Insertable connector bolt	For Roto Line AL geared-handle	100 Piece(s)	254601

[40] Connecting rod, fixed, horizontal, bottom (CR5)

→ *from page 274*

4.3.10 T-O | 300 kg

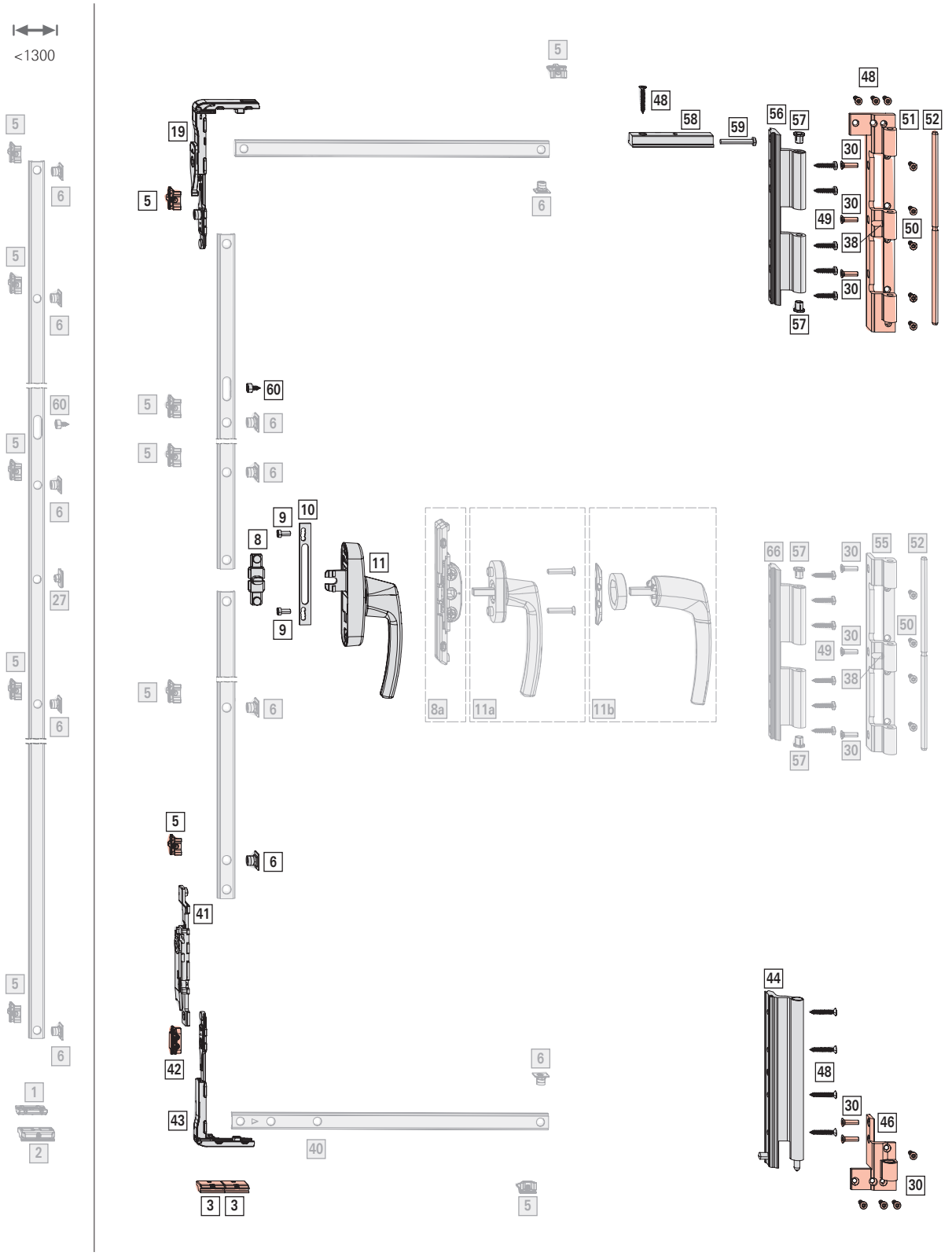

Application range

Sash width **SW**: 200[31] - 1600 mm

Sash height **SH**: 520 - 3000 mm

Sash weight **S.kg**: max. 300 kg

Hinge passage **HP**: > 8 mm

Basic set

[*]	T-O hinge side set | 300 kg			1
				№
SF	Special colour	Left	1 Piece(s)	775018
		Right	1 Piece(s)	775017

Contents:

[*]		#
[30]	Countersunk screw M5 x 10	9
[38]	Piercing screw M5	1
[44]	Corner hinge | 300 kg	1
[46]	Pivot rest, compl. | 300 kg	1
[48]	Countersunk screw ST4.8 x 19	5
[49]	Countersunk screw ST4.8 x 25	5
[50]	Countersunk screw M5 x 16	8
[51]	Bearing | 300 kg	1
[52]	Bearing pin | 300 kg	1
[56]	Turn-Only hinge | 300 kg	1
[57]	Turn-Only bearing bush	2
[58]	Clamping block | 300 kg	1
[59]	Flat-headed screw M5 x 40	1

[*]	T-O SL locking components set	1
		№
V.01	10 Piece(s)	798205
V.02	10 Piece(s)	798206

Contents:

[*]		#
[3]	Run-up wedge V.01 / V.02	2
[5]	Striker V.01 / V.02	2
[6]	Cam, insertable	1
[19]	Corner drive with blocking device and retaining fork	1
[43]	Corner drive for sash lifter with retaining fork	1

[*]	**Sash lifter set**; for T-O SL locking components set
	№
Left	20 Piece(s) 775021
Right	20 Piece(s) 775020

Contents:

[*]		#
[41]	Coupler component with run-up block	1
[42]	Stop	1

[60]	Locking sleeve			1
				№
Locking sleeve	Blocks the entire movement of the espagnolette	1	100 Piece(s)	738549

Espagnolette and connector

[*]	T connector set		
			№
AL T connector set		10 Piece(s)	728981

Contents:

[*]		
[8]	T connector	1
[9]	Cylinder screw M5 x 12	2

[10]	Espagnolette support		
			№
Espagnolette support	For Roto Line AL geared-handle	100 Piece(s)	331937

[11]	Roto Line AL geared-handle		1
			→ CTL_1
	Alternatively:		
[a]	Window handle – standard	1	→ CTL_1
	Countersunk screw M5 x 30	2	
[b]	Handle without escutcheon	1	→ CTL_1
	Ring for handle without escutcheon	1	
	Mounting plate	1	

Height-dependent components

[*]	T-O central hinge | 300 kg		
			№
SF	Special colour	1 Piece(s)	775019

[31] With small sash widths, pay attention to the system-specific profile assessment.

Contents:

[*]		#
[30]	Countersunk screw M5 x 10	3
[38]	Piercing screw M5	1
[49]	Countersunk screw ST4.8 x 25	6
[50]	Countersunk screw M5 x 16	4
[52]	Bearing pin | 300 kg	1
[55]	CL bearing | 300 kg	1
[57]	Turn-Only bearing bush	4
[66]	CL hinge | 300 kg	1

≤ 1300	–
> 1300	1

[5] Striker

			№
V.01	9	100 Piece(s)	728918
V.02	9	100 Piece(s)	728920

≤ 1300	–
1301 – 1800	1
1801 – 2400	2
> 2400	3

[6] Cam, insertable

		№
Insertable	100 Piece(s)	334671

≤ 1300	–
1301 – 1800	1
1801 – 2400	2
> 2400	3

Width-dependent components

[*] T-O locking components set; SW < 1300 mm

1

		№
V.01	10 Piece(s)	728756
V.02	10 Piece(s)	728757

Contents:

[*]		#
[1]	Run-up block	1
[2]	Tilt striker	1
[5]	Striker V.01 / V.02	2
[6]	Cam, insertable	2

[5] Striker

			№
V.01	9	100 Piece(s)	728918
V.02	9	100 Piece(s)	728920

≤ 1300	–
> 1300	2

[6] Cam, insertable

		№
Insertable	100 Piece(s)	334671

≤ 1300	–
> 1300	2

[27] Connector bolt, insertable; SW < 1300 mm

			№
Insertable connector bolt	For Roto Line AL geared-handle	100 Piece(s)	254601

[40] Connecting rod, fixed, horizontal, bottom (CR5)

→ *from page 274*

4.4 Tilt-Only hardware

4.4.1 TiSt | 130 kg

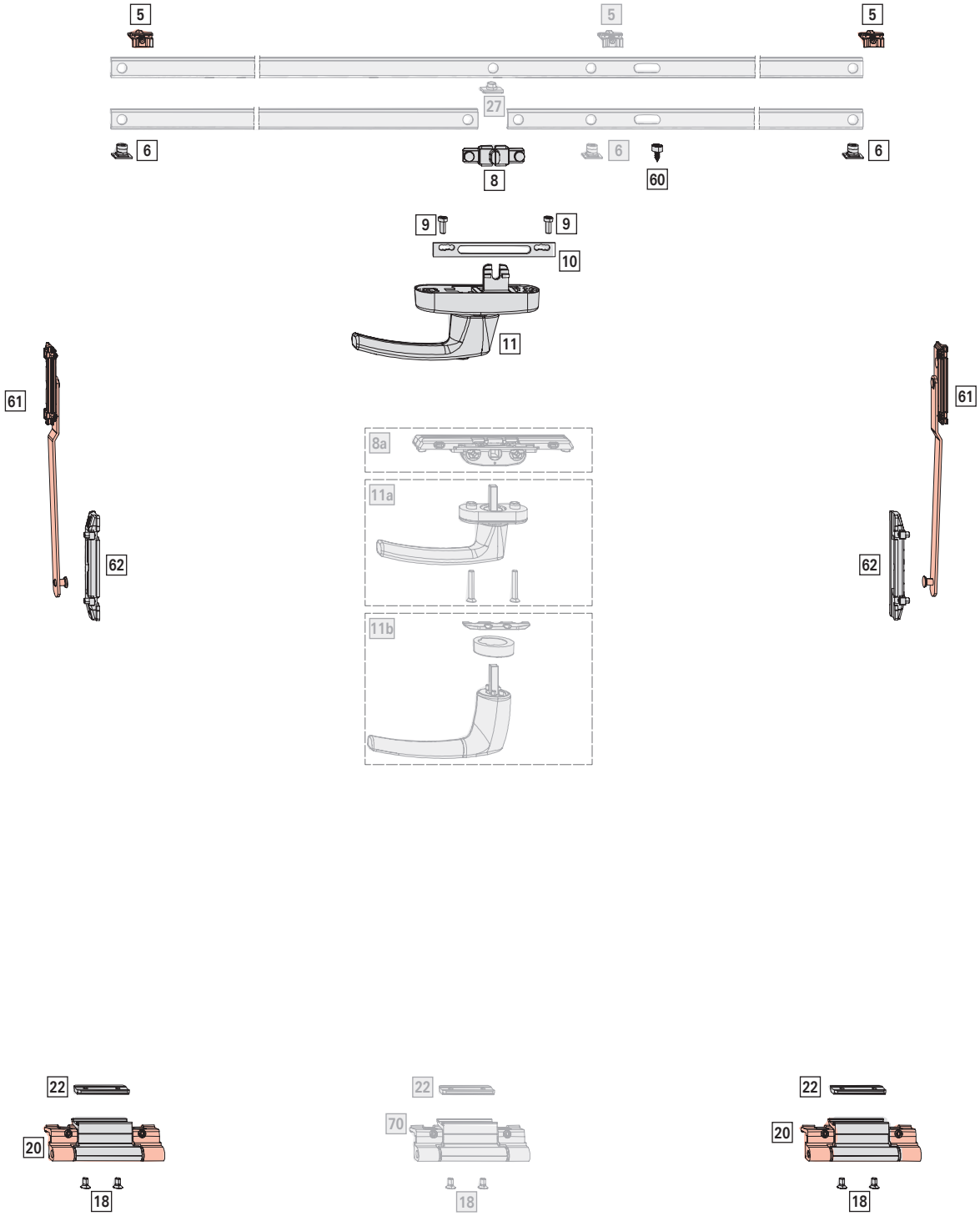

Application range

Sash width **SW**: 375 - 1600 mm

Sash height **SH**: 450 - 1300 mm

Sash weight **S.kg**: max. 130 kg

Hinge passage **HP**: > 3.5 mm

Basic set

[*] TiS hinge side set | 130 kg 1

				№
Clamp strip version 1	R01.5	Silver	20 Piece(s)	728716
	R05.4	Dark bronze	20 Piece(s)	728717
	R06.2M	Jet black, matt	20 Piece(s)	728718
	R07.2	Traffic white	20 Piece(s)	728719
	SF	Special colour	20 Piece(s)	728720
Clamp strip version 2	R01.5	Silver	20 Piece(s)	728721
	R05.4	Dark bronze	20 Piece(s)	728722
	R06.2M	Jet black, matt	20 Piece(s)	728723
	R07.2	Traffic white	20 Piece(s)	728724
	SF	Special colour	20 Piece(s)	740894
Clamp strip version 3	SF	Special colour	20 Piece(s)	728726

Contents:

[*]		#
[18]	Countersunk screw M5 x 9	4
[20]	T-O hinge, compl. (including bearing)	1
[22]	Clamping support-strip	1

INFO
Only use bearings / clamp strips which have been approved for the profile. Information can be obtained from Roto sales representatives.

[*] TiSt locking components set 1
Large packages → *from page 278*

		№
V.01	10 Piece(s)	728858
V.02	10 Piece(s)	728859

Contents:

[*]		#
[5]	Striker V.01 / V.02	2
[6]	Cam, insertable	2
[61]	Tilt-Only stay arm, compl.	2
[62]	Slide bar, compl.	2

[60] Locking sleeve 1

				№
Locking sleeve	Blocks the entire movement of the espagnolette	1	100 Piece(s)	738549

Espagnolette and connector

[*] T connector set 1
Alternatively:
[27] Connector bolt, insertable 1 → *from page 271*
[8a] Flush-encased gearbox 1 → *from page 272*

		№
AL T connector set	10 Piece(s)	728981

Contents:

[*]		
[8]	T connector	1
[9]	Cylinder screw M5 x 12	2

[10] Espagnolette support 1

			№
Espagnolette support	For Roto Line AL geared-handle	100 Piece(s)	331937

[11] Roto Line AL geared-handle 1
→ CTL_1
Alternatively:
[a] Window handle – standard 1 → CTL_1
Countersunk screw M5 x 30 2
[b] Handle without escutcheon 1 → CTL_1
Ring for handle without escutcheon 1
Mounting plate 1

Width-dependent components

[70] T-O / TiS central hinge | 130 kg
Alternatively:
CL sash and frame component → *from page 267*

				№
Clamp strip version 1	R01.5	Silver	50 Piece(s)	728768
	R05.4	Dark bronze	50 Piece(s)	728769
	R06.2	Jet black	50 Piece(s)	728770
	R07.2	Traffic white	50 Piece(s)	728771
	SF	Special colour	50 Piece(s)	728772
Clamp strip version 2	R01.5	Silver	50 Piece(s)	728773
	R05.4	Dark bronze	50 Piece(s)	728774
	R06.2	Jet black	50 Piece(s)	728775
	R07.2	Traffic white	50 Piece(s)	728776
	SF	Special colour	50 Piece(s)	740892
Clamp strip version 3	SF	Special colour	50 Piece(s)	728778

≤ 1300	–
> 1300	1

[*] Small parts set

for T-O / TiS central hinge | 130 kg and T-O-C central hinge | 160 kg

		Nº
Small parts set	100 Piece(s)	728966

Contents:

[*]		#
[22]	Clamping support-strip	1
[18]	Countersunk screw M5 x 9	2

≤ 1300	–
> 1300	1

[5] Striker

			Nº
V.01	9	100 Piece(s)	728918
V.02	9	100 Piece(s)	728920

≤ 1300	–
> 1300	1

[6] Cam, insertable

		Nº
Insertable	100 Piece(s)	334671

≤ 1300	–
> 1300	1

4.4.2 TiSt | RC 2 | 130 kg

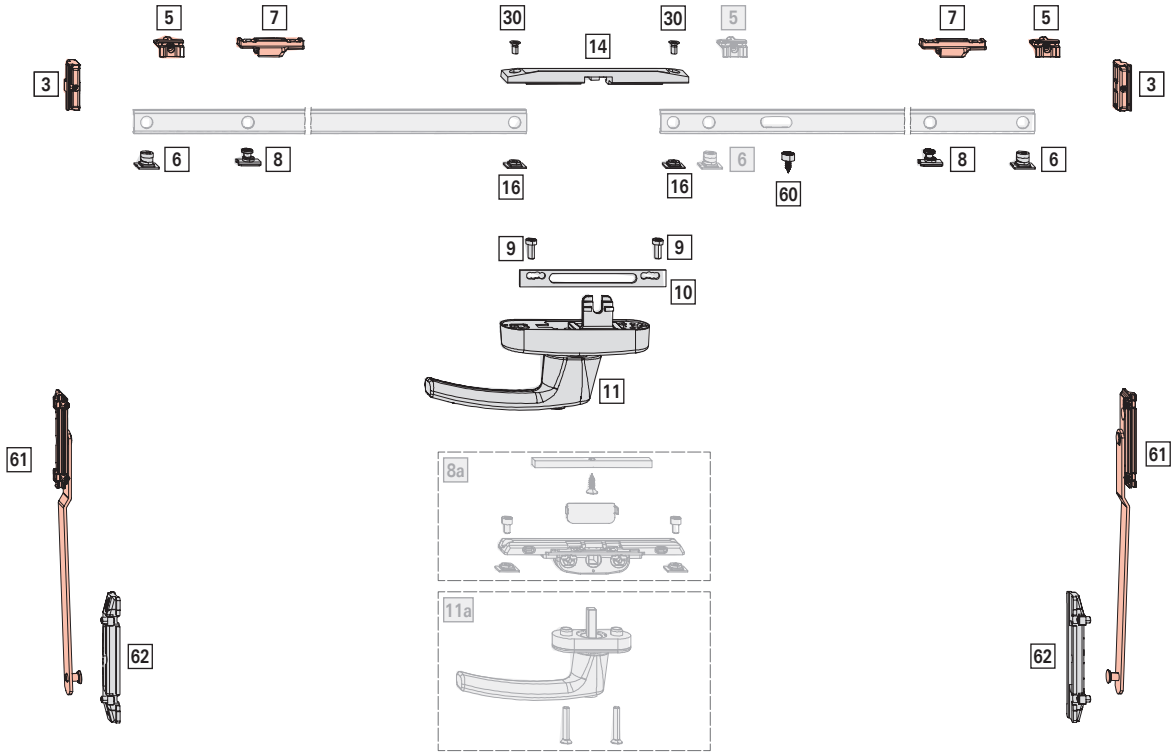

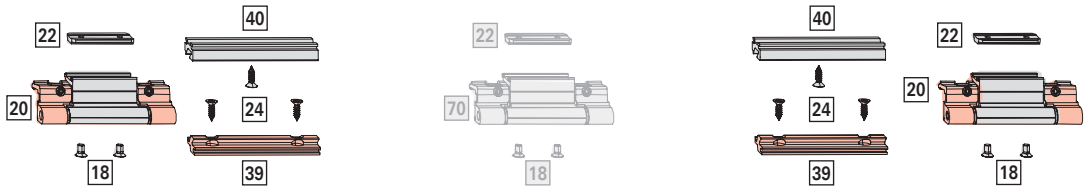

Application range

Sash width **SW**: 575 - 1600 mm

Sash height **SH**: 520 - 1300 mm

Sash weight **S.kg**: max. 130 kg

Hinge passage **HP**: > 3.5 mm

Basic set

[*] TiS hinge side set | 130 kg 1

				№
Clamp strip version 1	R01.5	Silver	20 Piece(s)	728716
	R05.4	Dark bronze	20 Piece(s)	728717
	R06.2M	Jet black, matt	20 Piece(s)	728718
	R07.2	Traffic white	20 Piece(s)	728719
	SF	Special colour	20 Piece(s)	728720
Clamp strip version 2	R01.5	Silver	20 Piece(s)	728721
	R05.4	Dark bronze	20 Piece(s)	728722
	R06.2M	Jet black, matt	20 Piece(s)	728723
	R07.2	Traffic white	20 Piece(s)	728724
	SF	Special colour	20 Piece(s)	740894
Clamp strip version 3	SF	Special colour	20 Piece(s)	728726

Contents:

[*]		#
[18]	Countersunk screw M5 x 9	4
[20]	T-O hinge, compl. (including bearing)	1
[22]	Clamping support-strip	1

INFO
Only use bearings / clamp strips which have been approved for the profile. Information can be obtained from Roto sales representatives.

[*] SEC hinge lock set 2

		№
V.01	10 Piece(s)	728940
V.02	10 Piece(s)	728941

Contents:

[*]		#
[24]	Countersunk screw ST4.8 x 16	3
[39]	Frame component V.01 / V.02	1
[40]	Sash component	1

[*] TiSt locking components set 1

Large packages → *from page 278*

		№
V.01	10 Piece(s)	728858
V.02	10 Piece(s)	728859

Contents:

[*]		#
[5]	Striker V.01 / V.02	2
[6]	Cam, insertable	2
[61]	Tilt-Only stay arm, compl.	2
[62]	Slide bar, compl.	2

[60] Locking sleeve 1

				№
Locking sleeve	Blocks the entire movement of the espagnolette	1	100 Piece(s)	738549

[2] Tilt striker 2

		№
Tilt striker	100 Piece(s)	728860

[7] SEC striker 2

			№
V.01	9	100 Piece(s)	212637
V.02	9	100 Piece(s)	212638

[8] SEC cam RC 2 2

		№
Insertable	100 Piece(s)	447245

Espagnolette and connector

[*] SEC espagnolette protection set 1

Large packages → *from page 271*

Alternatively:

[8a] SEC flush-encased gearbox set 1 → *from page 282*

		№
SEC espagnolette protection set	10 Piece(s)	728952

Contents:

[*]		#
[14]	SEC espagnolette protection	1
[16]	SEC connector	2
[30]	Countersunk screw M5 x 10	2

[9] Cylinder screw M5 x 12 — 2

			Nº
Cylinder screw	M5x12	100 Piece(s)	728925

[10] Espagnolette support — 1

			Nº
Espagnolette support	For Roto Line AL geared-handle	100 Piece(s)	331937

[11] Roto Line AL geared-handle, lockable — 1 → CTL_1

Alternatively:

[a] Window handle – standard, lockable — 1 → CTL_1

Countersunk screw M5 x 30 — 2

Width-dependent components

[70] T-O / TiS central hinge | 130 kg

Alternatively:

CL sash and frame component → *from page 267*

				Nº
Clamp strip version 1	R01.5	Silver	50 Piece(s)	728768
	R05.4	Dark bronze	50 Piece(s)	728769
	R06.2	Jet black	50 Piece(s)	728770
	R07.2	Traffic white	50 Piece(s)	728771
	SF	Special colour	50 Piece(s)	728772
Clamp strip version 2	R01.5	Silver	50 Piece(s)	728773
	R05.4	Dark bronze	50 Piece(s)	728774
	R06.2	Jet black	50 Piece(s)	728775
	R07.2	Traffic white	50 Piece(s)	728776
	SF	Special colour	50 Piece(s)	740892
Clamp strip version 3	SF	Special colour	50 Piece(s)	728778

≤ 1300	–
> 1300	1

[*] Small parts set

for T-O / TiS central hinge | 130 kg and T-O-C central hinge | 160 kg

		Nº
Small parts set	100 Piece(s)	728966

Contents:

[*]		#
[22]	Clamping support-strip	1
[18]	Countersunk screw M5 x 9	2

≤ 1300	–
> 1300	1

[5] Striker

			Nº
V.01	9	100 Piece(s)	728918
V.02	9	100 Piece(s)	728920

≤ 1300	–
> 1300	1

[6] Cam, insertable

		Nº
Insertable	100 Piece(s)	334671

≤ 1300	–
> 1300	1

4.4.3 TiSt | RC 3 | 130 kg

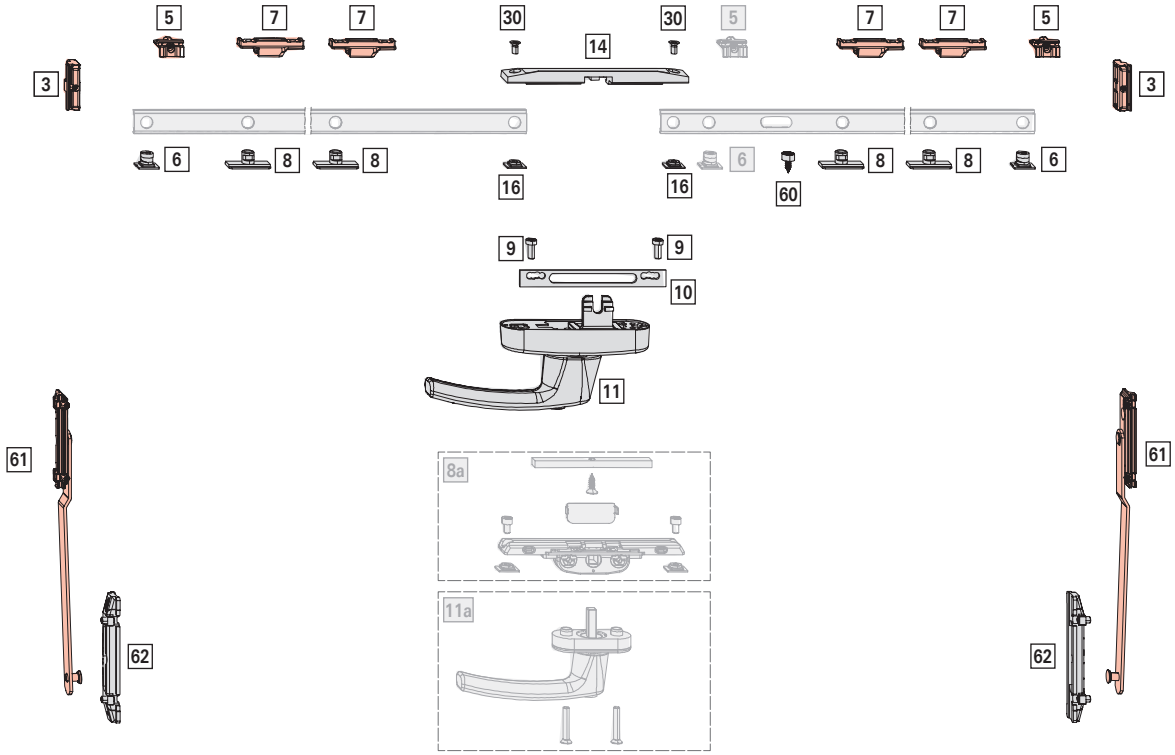

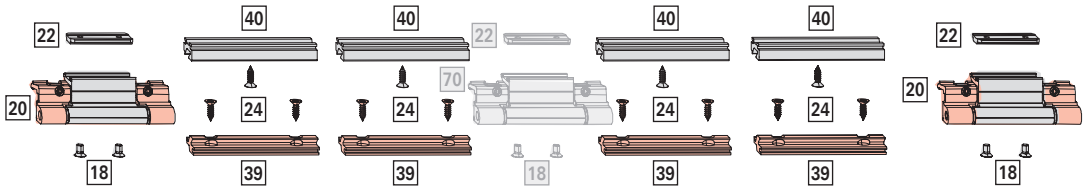

Application range

Sash width **SW**: 845 - 1600 mm

Sash height **SH**: 520 - 1300 mm

Sash weight **S.kg**: max. 130 kg

Hinge passage **HP**: > 3.5 mm

Basic set

[*] TiS hinge side set | 130 kg — 1

				№
Clamp strip version 1	R01.5	Silver	20 Piece(s)	728716
	R05.4	Dark bronze	20 Piece(s)	728717
	R06.2M	Jet black, matt	20 Piece(s)	728718
	R07.2	Traffic white	20 Piece(s)	728719
	SF	Special colour	20 Piece(s)	728720
Clamp strip version 2	R01.5	Silver	20 Piece(s)	728721
	R05.4	Dark bronze	20 Piece(s)	728722
	R06.2M	Jet black, matt	20 Piece(s)	728723
	R07.2	Traffic white	20 Piece(s)	728724
	SF	Special colour	20 Piece(s)	740894
Clamp strip version 3	SF	Special colour	20 Piece(s)	728726

Contents:

[*]		#
[18]	Countersunk screw M5 x 9	4
[20]	T-O hinge, compl. (including bearing)	1
[22]	Clamping support-strip	1

INFO
Only use bearings / clamp strips which have been approved for the profile. Information can be obtained from Roto sales representatives.

[*] SEC hinge lock set — 4

		№
V.01	10 Piece(s)	728940
V.02	10 Piece(s)	728941

Contents:

[*]		#
[24]	Countersunk screw ST4.8 x 16	3
[39]	Frame component V.01 / V.02	1
[40]	Sash component	1

[*] TiSt locking components set — 1

Large packages → *from page 278*

		№
V.01	10 Piece(s)	728858
V.02	10 Piece(s)	728859

Contents:

[*]		#
[5]	Striker V.01 / V.02	2
[6]	Cam, insertable	2
[61]	Tilt-Only stay arm, compl.	2
[62]	Slide bar, compl.	2

[60] Locking sleeve — 1

				№
Locking sleeve	Blocks the entire movement of the espagnolette	1	100 Piece(s)	738549

[2] Tilt striker — 2

		№
Tilt striker	100 Piece(s)	728860

[7] SEC striker — 4

			№
V.01	9	100 Piece(s)	212637
V.02	9	100 Piece(s)	212638

[8] SEC cam RC 3 — 4

		№
Insertable	100 Piece(s)	447245

Espagnolette and connector

[*] SEC espagnolette protection set — 1

Large packages → *from page 271*

Alternatively:

[8a] SEC flush-encased gearbox set — 1 → *from page 282*

		№
SEC espagnolette protection set	10 Piece(s)	728952

Contents:

[*]		#
[14]	SEC espagnolette protection	1
[16]	SEC connector	2
[30]	Countersunk screw M5 x 10	2

[9] Cylinder screw M5 x 12 — 2

			Nº
Cylinder screw	M5x12	100 Piece(s)	728925

[10] Espagnolette support — 1

			Nº
Espagnolette support	For Roto Line AL geared-handle	100 Piece(s)	331937

[11] Roto Line AL geared-handle, lockable — 1 → CTL_1

Alternatively:

[a] Window handle – standard, lockable — 1 → CTL_1

Countersunk screw M5 x 30 — 2

Width-dependent components

[70] T-O / TiS central hinge | 130 kg

Alternatively:

CL sash and frame component → *from page 267*

				Nº
Clamp strip version 1	R01.5	Silver	50 Piece(s)	728768
	R05.4	Dark bronze	50 Piece(s)	728769
	R06.2	Jet black	50 Piece(s)	728770
	R07.2	Traffic white	50 Piece(s)	728771
	SF	Special colour	50 Piece(s)	728772
Clamp strip version 2	R01.5	Silver	50 Piece(s)	728773
	R05.4	Dark bronze	50 Piece(s)	728774
	R06.2	Jet black	50 Piece(s)	728775
	R07.2	Traffic white	50 Piece(s)	728776
	SF	Special colour	50 Piece(s)	740892
Clamp strip version 3	SF	Special colour	50 Piece(s)	728778

≤ 1300	–
> 1300	1

[*] Small parts set

for T-O / TiS central hinge | 130 kg and T-O-C central hinge | 160 kg

		Nº
Small parts set	100 Piece(s)	728966

Contents:

[*]		#
[22]	Clamping support-strip	1
[18]	Countersunk screw M5 x 9	2

≤ 1300	–
> 1300	1

[5] Striker

			Nº
V.01	9	100 Piece(s)	728918
V.02	9	100 Piece(s)	728920

≤ 1300	–
> 1300	1

[6] Cam, insertable

		Nº
Insertable	100 Piece(s)	334671

≤ 1300	–
> 1300	1

4.4.4 TiSt | 200 kg

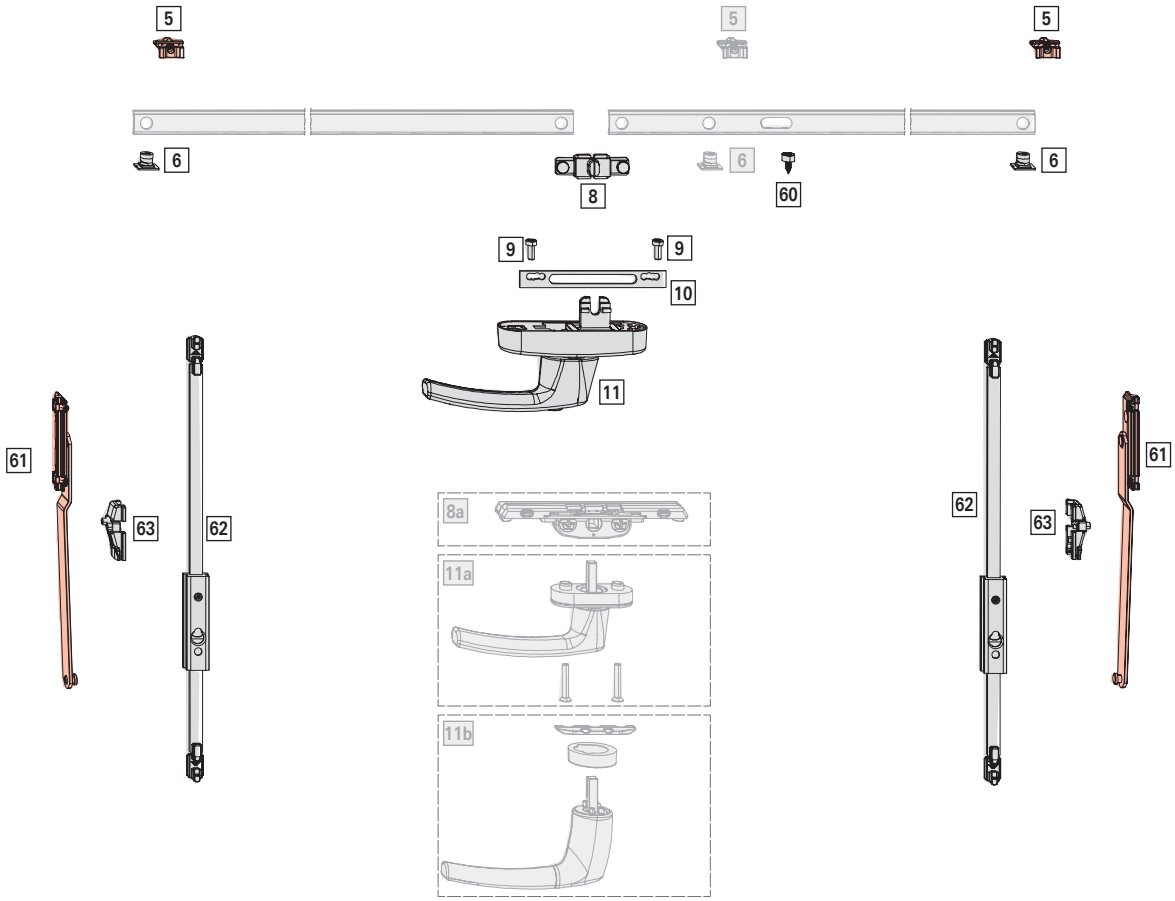

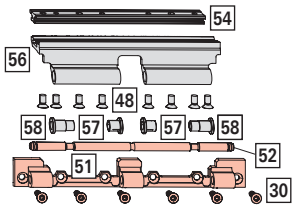

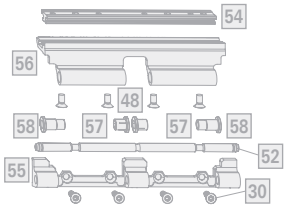

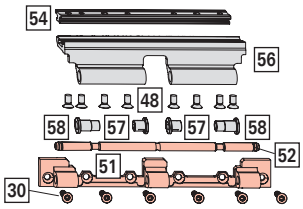

Application range

Sash width **SW**: 520 - 1600 mm

Sash height **SH**: 450 - 1300 mm

Sash weight **S.kg**: max. 200 kg

Hinge passage **HP**: > 7 mm

Basic set

[*] TiS hinge side set | 200 kg 1

			Nº
SF	Special colour	2 Piece(s)	775013

Contents:

[*]		#
[30]	Countersunk screw M5 x 10	8
[48]	Countersunk screw ST4.8 x 19	12
[51]	Stay bearing | 200 kg	2
[52]	Bearing pin | 200 kg	2
[54]	Clamping support-strip | 200 kg	2
[56]	Turn-Only hinge | 200 kg	2
[57]	Turn-Only bearing bush, short	4
[58]	Turn-Only bearing bush, long	4

INFO
Only use bearings / clamp strips which have been approved for the profile. Information can be obtained from Roto sales representatives.

[*] TiSs locking components set 1
Large packages → *from page 278*

		Nº
V.01	10 Piece(s)	793734
V.02	10 Piece(s)	793745

Contents:

[*]		#
[5]	Striker V.01 / V.02	2
[6]	Cam, insertable	2
[61]	Tilt-Only stay arm, compl.	2
[62]	Slider, compl.	2
[63]	Stop, compl.	2
	Run-up block	1
	Corner drive without blocking device, with retaining fork	2
	SEC connector	2
	SEC coupler component, plate	1
	Washer	2
	Cylinder screw M5 x 6	2

[60] Locking sleeve 1

				Nº
Locking sleeve	Blocks the entire movement of the espagnolette	1	100 Piece(s)	738549

Espagnolette and connector

[*] T connector set 1
Alternatively:
[8a] Flush-encased gearbox 1 → *from page 272*

		Nº
AL T connector set	10 Piece(s)	728981

Contents:

[*]		
[8]	T connector	1
[9]	Cylinder screw M5 x 12	2

[10] Espagnolette support 1

			Nº
Espagnolette support	For Roto Line AL geared-handle	100 Piece(s)	331937

[11] Roto Line AL geared-handle 1
→ CTL_1

Alternatively:
[a] Window handle – standard 1 → CTL_1
Countersunk screw M5 x 30 2
[b] Handle without escutcheon 1 → CTL_1
Ring for handle without escutcheon 1
Mounting plate 1

Width-dependent components

[*] TiS central hinge | 200 kg

			Nº
SF	Special colour	1 Piece(s)	775014

Contents:

[*]		#
[30]	Countersunk screw M5 x 10	4
[48]	Countersunk screw ST4.8 x 19	4
[52]	TiS bearing pin | 200 kg	1
[54]	Clamping support-strip | 200 kg	1
[55]	CL TiS bearing | 200 kg	1
[56]	Turn-Only hinge | 200 kg	1
[57]	TiS Turn-Only bearing bush	4

≤ 1300	–
> 1300	1

[5] Striker

			№
V.01	9	100 Piece(s)	728918
V.02	9	100 Piece(s)	728920

≤ 1300	–
> 1300	1

[6] Cam, insertable

		№
Insertable	100 Piece(s)	334671

≤ 1300	–
> 1300	1

4.4.5 TiSs | 130 kg

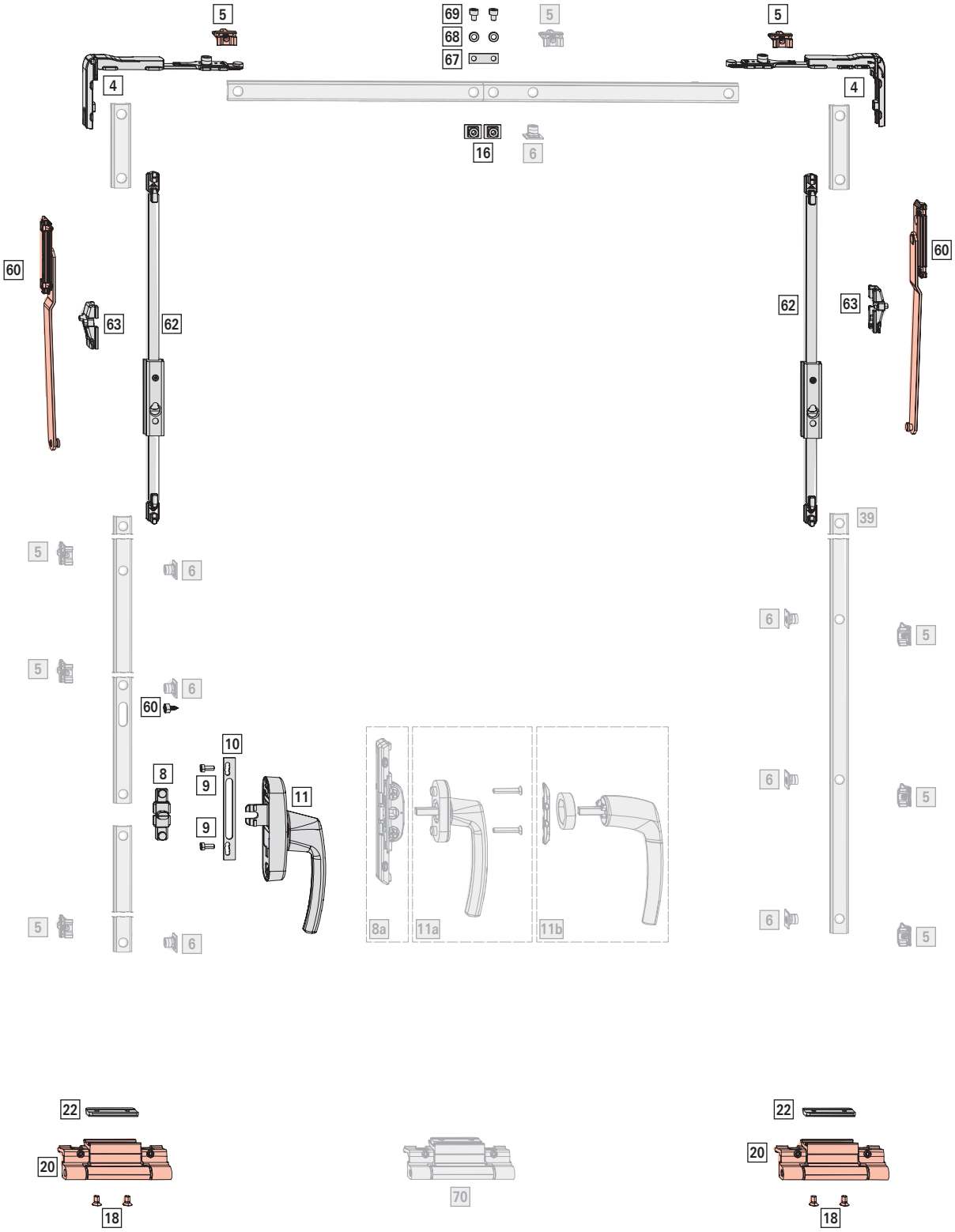

Application range

Sash width **SW**: 390 - 1600 mm

Sash height **SH**: 1200 - 3000 mm

Sash weight **S.kg**: max. 130 kg

Hinge passage **HP**: > 3.5 mm

Basic set

[*] TiS hinge side set | 130 kg 1

				№
Clamp strip version 1	R01.5	Silver	20 Piece(s)	728716
	R05.4	Dark bronze	20 Piece(s)	728717
	R06.2M	Jet black, matt	20 Piece(s)	728718
	R07.2	Traffic white	20 Piece(s)	728719
	SF	Special colour	20 Piece(s)	728720
Clamp strip version 2	R01.5	Silver	20 Piece(s)	728721
	R05.4	Dark bronze	20 Piece(s)	728722
	R06.2M	Jet black, matt	20 Piece(s)	728723
	R07.2	Traffic white	20 Piece(s)	728724
	SF	Special colour	20 Piece(s)	740894
Clamp strip version 3	SF	Special colour	20 Piece(s)	728726

Contents:

[*]		#
[18]	Countersunk screw M5 x 9	4
[20]	T-O hinge, compl. (including bearing)	1
[22]	Clamping support-strip	1

INFO
Only use bearings / clamp strips which have been approved for the profile. Information can be obtained from Roto sales representatives.

[*] TiSs locking components set 1
Large packages → *from page 278*

		№
V.01	10 Piece(s)	793734
V.02	10 Piece(s)	793745

Contents:

[*]		#
[1]	Run-up block	1
[4]	Corner drive without blocking device, with retaining fork	2
[5]	Striker V.01 / V.02	2
[6]	Cam, insertable	2
[16]	SEC connector	2
[61]	Tilt-Only stay arm, compl.	2
[62]	Slider, compl.	2
[63]	Stop, compl.	2
[67]	SEC coupler component, plate	1
[68]	Washer	2
[69]	Cylinder screw M5 x 6	2

[60] Locking sleeve 1

				№
Locking sleeve	Blocks the entire movement of the espagnolette	1	100 Piece(s)	738549

Espagnolette and connector

[*] T connector set 1
Alternatively:
[8a] Flush-encased gearbox 1 → *from page 272*

		№
AL T connector set	10 Piece(s)	728981

Contents:

[*]		
[8]	T connector	1
[9]	Cylinder screw M5 x 12	2

[10] Espagnolette support 1

			№
Espagnolette support	For Roto Line AL geared-handle	100 Piece(s)	331937

[11] Roto Line AL geared-handle 1
→ CTL_1

Alternatively:

[a]	Window handle – standard	1	→ CTL_1
	Countersunk screw M5 x 30	2	
[b]	Handle without escutcheon	1	→ CTL_1
	Ring for handle without escutcheon	1	
	Mounting plate	1	

Height-dependent components

[5] Striker

			№
V.01	9	100 Piece(s)	728918
V.02	9	100 Piece(s)	728920

≤ 1800	2
1801 – 2400	4
> 2400	6

[6] Cam, insertable

		№
Insertable	100 Piece(s)	334671

≤ 1800	2
1801 – 2400	4
> 2400	6

Width-dependent components

[70] T-O / TiS central hinge | 130 kg

Alternatively:
CL sash and frame component → *from page 267*

				№
Clamp strip version 1	R01.5	Silver	50 Piece(s)	728768
	R05.4	Dark bronze	50 Piece(s)	728769
	R06.2	Jet black	50 Piece(s)	728770
	R07.2	Traffic white	50 Piece(s)	728771
	SF	Special colour	50 Piece(s)	728772
Clamp strip version 2	R01.5	Silver	50 Piece(s)	728773
	R05.4	Dark bronze	50 Piece(s)	728774
	R06.2	Jet black	50 Piece(s)	728775
	R07.2	Traffic white	50 Piece(s)	728776
	SF	Special colour	50 Piece(s)	740892
Clamp strip version 3	SF	Special colour	50 Piece(s)	728778

≤ 1300	–
> 1300	1

[*] Small parts set

for T-O / TiS central hinge | 130 kg and T-O-C central hinge | 160 kg

		№
Small parts set	100 Piece(s)	728966

Contents:

[*]		#
[22]	Clamping support-strip	1
[18]	Countersunk screw M5 x 9	2

≤ 1300	–
> 1300	1

[5] Striker

			№
V.01	9	100 Piece(s)	728918
V.02	9	100 Piece(s)	728920

≤ 1300	–
> 1300	1

[6] Cam, insertable

		№
Insertable	100 Piece(s)	334671

≤ 1300	–
> 1300	1

4.4.6 TiSs | RC 2 | 130 kg

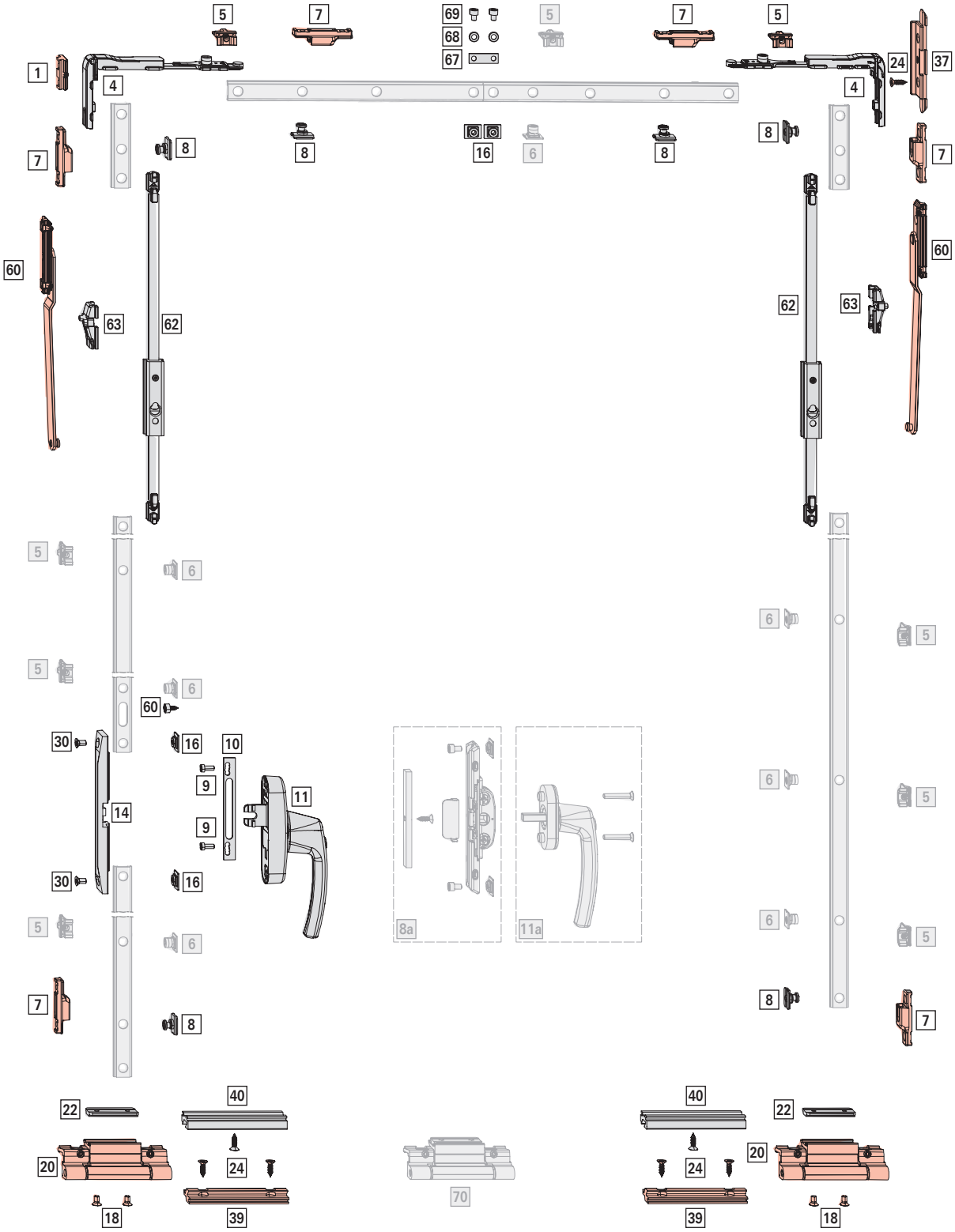

Application range

Sash width **SW**: 545 - 1600 mm

Sash height **SH**: 1200 - 3000 mm

Sash weight **S.kg**: max. 130 kg

Hinge passage **HP**: > 3.5 mm

Basic set

[*] TiS hinge side set | 130 kg 1

				№
Clamp strip version 1	R01.5	Silver	20 Piece(s)	728716
	R05.4	Dark bronze	20 Piece(s)	728717
	R06.2M	Jet black, matt	20 Piece(s)	728718
	R07.2	Traffic white	20 Piece(s)	728719
	SF	Special colour	20 Piece(s)	728720
Clamp strip version 2	R01.5	Silver	20 Piece(s)	728721
	R05.4	Dark bronze	20 Piece(s)	728722
	R06.2M	Jet black, matt	20 Piece(s)	728723
	R07.2	Traffic white	20 Piece(s)	728724
	SF	Special colour	20 Piece(s)	740894
Clamp strip version 3	SF	Special colour	20 Piece(s)	728726

Contents:

[*]		#
[18]	Countersunk screw M5 x 9	4
[20]	T-O hinge, compl. (including bearing)	1
[22]	Clamping support-strip	1

INFO
Only use bearings / clamp strips which have been approved for the profile. Information can be obtained from Roto sales representatives.

[*] SEC hinge lock set 2

		№
V.01	10 Piece(s)	728940
V.02	10 Piece(s)	728941

Contents:

[*]		#
[24]	Countersunk screw ST4.8 x 16	3
[39]	Frame component V.01 / V.02	1
[40]	Sash component	1

[*] TiSs locking components set 1

Large packages → *from page 278*

		№
V.01	10 Piece(s)	793734
V.02	10 Piece(s)	793745

Contents:

[*]		#
[1]	Run-up block	1
[4]	Corner drive without blocking device, with retaining fork	2
[5]	Striker V.01 / V.02	2
[6]	Cam, insertable	2
[16]	SEC connector	2
[61]	Tilt-Only stay arm, compl.	2
[62]	Slider, compl.	2
[63]	Stop, compl.	2
[67]	SEC coupler component, plate	1
[68]	Washer	2
[69]	Cylinder screw M5 x 6	2

[*] SEC rebate-clearance reduction set 1

Large packages → *from page 275*

			№
SEC rebate-clearance reduction set	For corner drives	10 Piece(s)	728950

[*]		#
[24]	Countersunk screw ST4.8 x 16	1
[37]	SEC rebate-clearance reduction CD	1

[60] Locking sleeve 1

				№
Locking sleeve	Blocks the entire movement of the espagnolette	1	100 Piece(s)	738549

[7] SEC striker 6

			№
V.01	9	100 Piece(s)	212637
V.02	9	100 Piece(s)	212638

[8] SEC cam RC 2 6

		№
Insertable	100 Piece(s)	447245

Espagnolette and connector

[*] SEC espagnolette protection set 1

Large packages → *from page 271*

Alternatively:

[8a] SEC flush-encased gearbox set	1	→ *from page 282*
		№
SEC espagnolette protection set	10 Piece(s)	728952

Contents:

[*]		#
[14]	SEC espagnolette protection	1
[16]	SEC connector	2
[30]	Countersunk screw M5 x 10	2

[9] Cylinder screw M5 x 12			2
			№
Cylinder screw	M5x12	100 Piece(s)	728925

[10] Espagnolette support			1
			№
Espagnolette support	For Roto Line AL geared-handle	100 Piece(s)	331937

[11] Roto Line AL geared-handle, lockable	1 → CTL_1
Alternatively:	
[a] Window handle – standard, lockable	1 → CTL_1
Countersunk screw M5 x 30	2

Height-dependent components

[5] Striker			
			№
V.01	9	100 Piece(s)	728918
V.02	9	100 Piece(s)	728920

≤ 1800	2
1801 – 2400	4
> 2400	6

[6] Cam, insertable		
		№
Insertable	100 Piece(s)	334671

≤ 1800	2
1801 – 2400	4
> 2400	6

Width-dependent components

[70] T-O / TiS central hinge | 130 kg
Alternatively:

CL sash and frame component → *from page 267*				
				№
Clamp strip version 1	R01.5	Silver	50 Piece(s)	728768
	R05.4	Dark bronze	50 Piece(s)	728769
	R06.2	Jet black	50 Piece(s)	728770
	R07.2	Traffic white	50 Piece(s)	728771
	SF	Special colour	50 Piece(s)	728772
Clamp strip version 2	R01.5	Silver	50 Piece(s)	728773
	R05.4	Dark bronze	50 Piece(s)	728774
	R06.2	Jet black	50 Piece(s)	728775
	R07.2	Traffic white	50 Piece(s)	728776
	SF	Special colour	50 Piece(s)	740892
Clamp strip version 3	SF	Special colour	50 Piece(s)	728778

≤ 1300	–
> 1300	1

[*] Small parts set for T-O / TiS central hinge | 130 kg and T-O-C central hinge | 160 kg		
		№
Small parts set	100 Piece(s)	728966

Contents:

[*]		#
[22]	Clamping support-strip	1
[18]	Countersunk screw M5 x 9	2

≤ 1300	–
> 1300	1

[5] Striker			
			№
V.01	9	100 Piece(s)	728918
V.02	9	100 Piece(s)	728920

≤ 1300	–
> 1300	1

[6] Cam, insertable		
		№
Insertable	100 Piece(s)	334671

≤ 1300	–
> 1300	1

4.4.7 TiSs | RC 3 | 130 kg

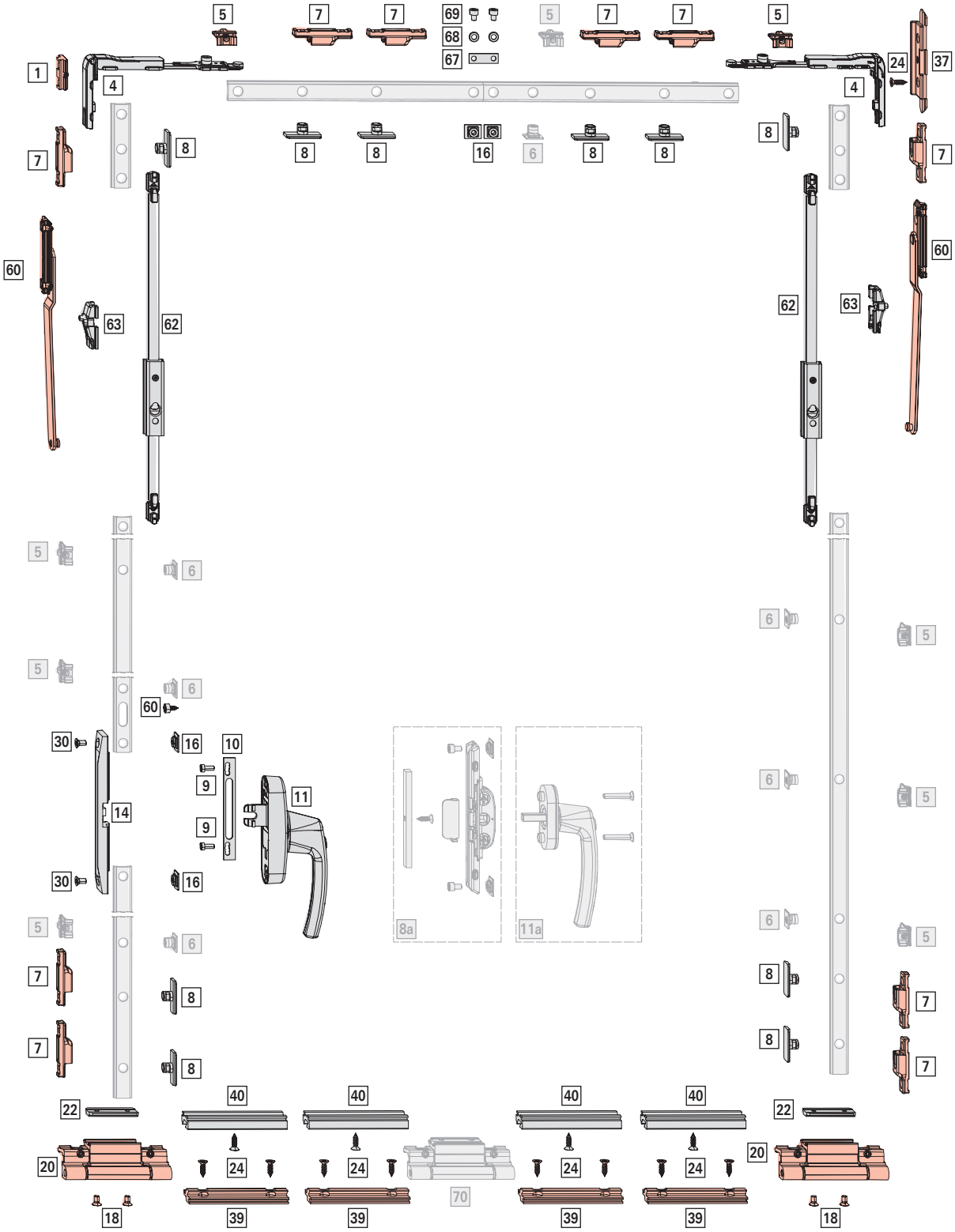

Application range

Sash width **SW**: 845 - 1600 mm

Sash height **SH**: 1200 - 3000 mm

Sash weight **S.kg**: max. 130 kg

Hinge passage **HP**: > 3.5 mm

Basic set

[*] TiS hinge side set | 130 kg 1

				№
Clamp strip version 1	R01.5	Silver	20 Piece(s)	728716
	R05.4	Dark bronze	20 Piece(s)	728717
	R06.2M	Jet black, matt	20 Piece(s)	728718
	R07.2	Traffic white	20 Piece(s)	728719
	SF	Special colour	20 Piece(s)	728720
Clamp strip version 2	R01.5	Silver	20 Piece(s)	728721
	R05.4	Dark bronze	20 Piece(s)	728722
	R06.2M	Jet black, matt	20 Piece(s)	728723
	R07.2	Traffic white	20 Piece(s)	728724
	SF	Special colour	20 Piece(s)	740894
Clamp strip version 3	SF	Special colour	20 Piece(s)	728726

Contents:

[*]		#
[18]	Countersunk screw M5 x 9	4
[20]	T-O hinge, compl. (including bearing)	1
[22]	Clamping support-strip	1

INFO
Only use bearings / clamp strips which have been approved for the profile. Information can be obtained from Roto sales representatives.

[*] SEC hinge lock set 4

		№
V.01	10 Piece(s)	728940
V.02	10 Piece(s)	728941

Contents:

[*]		#
[24]	Countersunk screw ST4.8 x 16	3
[39]	Frame component V.01 / V.02	1
[40]	Sash component	1

[*] TiSs locking components set 1

Large packages → *from page 278*

		№
V.01	10 Piece(s)	793734
V.02	10 Piece(s)	793745

Contents:

[*]		#
[1]	Run-up block	1
[4]	Corner drive without blocking device, with retaining fork	2
[5]	Striker V.01 / V.02	2
[6]	Cam, insertable	2
[16]	SEC connector	2
[61]	Tilt-Only stay arm, compl.	2
[62]	Slider, compl.	2
[63]	Stop, compl.	2
[67]	SEC coupler component, plate	1
[68]	Washer	2
[69]	Cylinder screw M5 x 6	2

[*] SEC rebate-clearance reduction set 1

Large packages → *from page 275*

			№
SEC rebate-clearance reduction set	For corner drives	10 Piece(s)	728950

[*]		#
[24]	Countersunk screw ST4.8 x 16	1
[37]	SEC rebate-clearance reduction CD	1

[60] Locking sleeve 1

				№
Locking sleeve	Blocks the entire movement of the espagnolette	1	100 Piece(s)	738549

[7] SEC striker 10

			№
V.01	9	100 Piece(s)	212637
V.02	9	100 Piece(s)	212638

[8] SEC cam RC 3 10

		№
Insertable	100 Piece(s)	447245

Espagnolette and connector

[*] SEC espagnolette protection set 1

Large packages → *from page 271*

Alternatively:

[8a] SEC flush-encased gearbox set	1	→ *from page 282*
		№
SEC espagnolette protection set	10 Piece(s)	728952

Contents:

[*]		#
[14]	SEC espagnolette protection	1
[16]	SEC connector	2
[30]	Countersunk screw M5 x 10	2

[9] Cylinder screw M5 x 12			2
			№
Cylinder screw	M5x12	100 Piece(s)	728925

[10] Espagnolette support			1
			№
Espagnolette support	For Roto Line AL geared-handle	100 Piece(s)	331937

[11] Roto Line AL geared-handle, lockable	1 → CTL_1
Alternatively:	
[a] Window handle – standard, lockable	1 → CTL_1
Countersunk screw M5 x 30	2

Height-dependent components

[5] Striker			
			№
V.01	9	100 Piece(s)	728918
V.02	9	100 Piece(s)	728920

≤ 1800	2
1801 – 2400	4
> 2400	6

[6] Cam, insertable		
		№
Insertable	100 Piece(s)	334671

≤ 1800	2
1801 – 2400	4
> 2400	6

Width-dependent components

[70] T-O / TiS central hinge | 130 kg
Alternatively:

CL sash and frame component → *from page 267*				
				№
Clamp strip version 1	R01.5	Silver	50 Piece(s)	728768
	R05.4	Dark bronze	50 Piece(s)	728769
	R06.2	Jet black	50 Piece(s)	728770
	R07.2	Traffic white	50 Piece(s)	728771
	SF	Special colour	50 Piece(s)	728772
Clamp strip version 2	R01.5	Silver	50 Piece(s)	728773
	R05.4	Dark bronze	50 Piece(s)	728774
	R06.2	Jet black	50 Piece(s)	728775
	R07.2	Traffic white	50 Piece(s)	728776
	SF	Special colour	50 Piece(s)	740892
Clamp strip version 3	SF	Special colour	50 Piece(s)	728778

≤ 1300	–
> 1300	1

[*] Small parts set for T-O / TiS central hinge | 130 kg and T-O-C central hinge | 160 kg		
		№
Small parts set	100 Piece(s)	728966

Contents:

[*]		#
[22]	Clamping support-strip	1
[18]	Countersunk screw M5 x 9	2

≤ 1300	–
> 1300	1

[5] Striker			
			№
V.01	9	100 Piece(s)	728918
V.02	9	100 Piece(s)	728920

≤ 1300	–
> 1300	1

[6] Cam, insertable		
		№
Insertable	100 Piece(s)	334671

≤ 1300	–
> 1300	1

4.4.8 TiSs | 200 kg

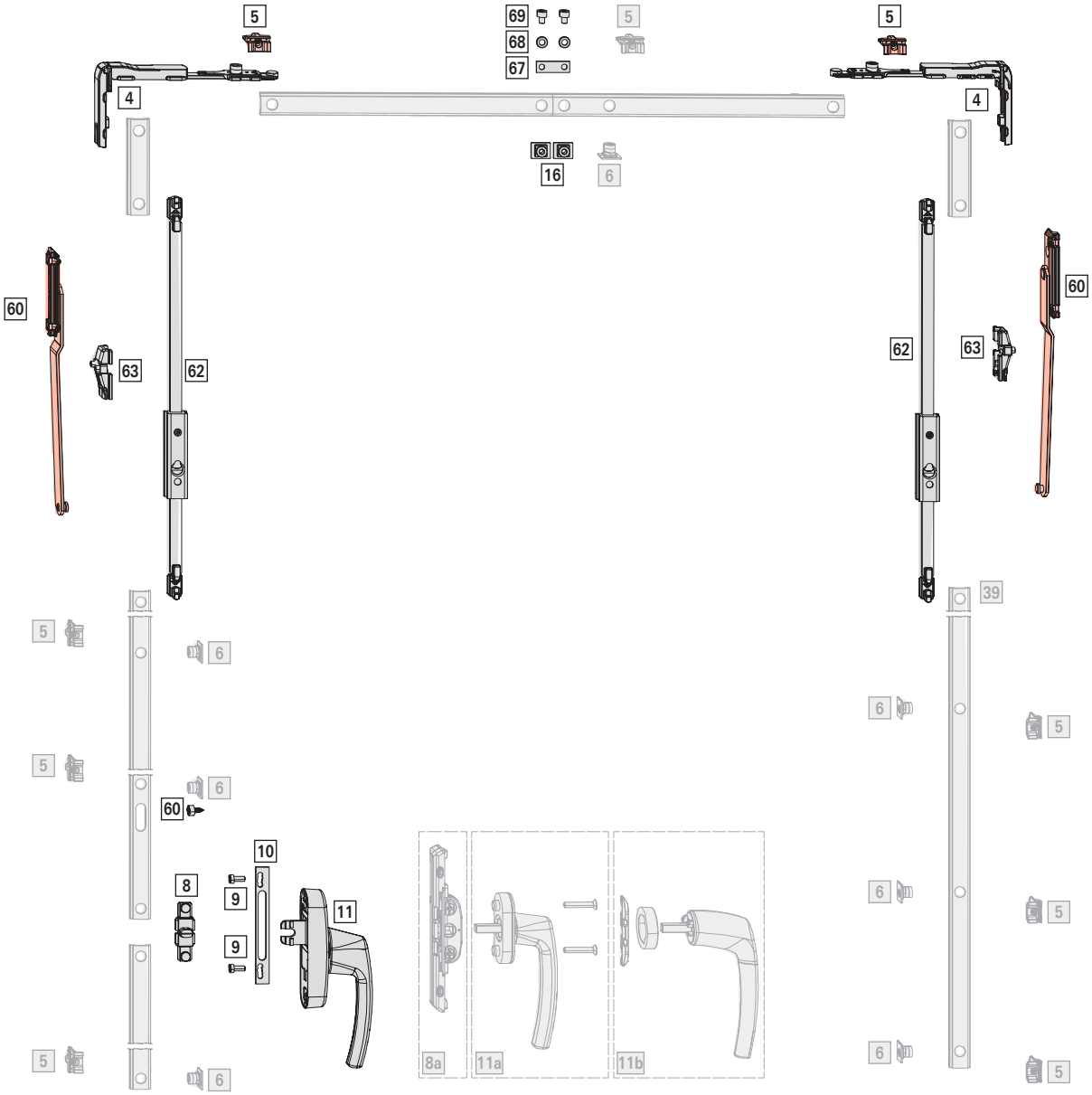

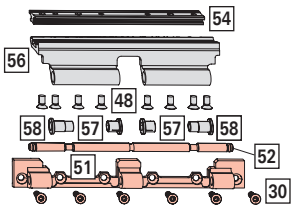

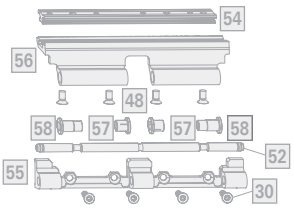

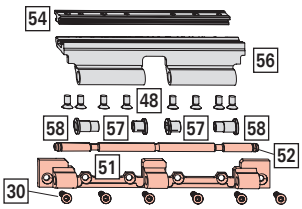

Application range

Sash width **SW**: 650 - 1600 mm

Sash height **SH**: 1300 - 3000 mm

Sash weight **S.kg**: max. 200 kg

Hinge passage **HP**: > 7 mm

Basic set

[*]	TiS hinge side set | 200 kg	1

			Nº
SF	Special colour	2 Piece(s)	775013

Contents:

[*]		#
[30]	Countersunk screw M5 x 10	8
[48]	Countersunk screw ST4.8 x 19	12
[51]	Stay bearing | 200 kg	2
[52]	Bearing pin | 200 kg	2
[54]	Clamping support-strip | 200 kg	2
[56]	Turn-Only hinge | 200 kg	2
[57]	Turn-Only bearing bush, short	4
[58]	Turn-Only bearing bush, long	4

INFO
Only use bearings / clamp strips which have been approved for the profile. Information can be obtained from Roto sales representatives.

[*]	TiSs locking components set	1
	Large packages → *from page 278*	

		Nº
V.01	10 Piece(s)	793734
V.02	10 Piece(s)	793745

Contents:

[*]		#
[1]	Run-up block	1
[4]	Corner drive without blocking device, with retaining fork	2
[5]	Striker V.01 / V.02	2
[6]	Cam, insertable	2
[16]	SEC connector	2
[61]	Tilt-Only stay arm, compl.	2
[62]	Slider, compl.	2
[63]	Stop, compl.	2
[67]	SEC coupler component, plate	1
[68]	Washer	2
[69]	Cylinder screw M5 x 6	2

[60]	Locking sleeve	1

				Nº
Locking sleeve	Blocks the entire movement of the espagnolette	1	100 Piece(s)	738549

Espagnolette and connector

[*]	T connector set	1
	Alternatively:	
[8a]	Flush-encased gearbox	1 → *from page 272*

		Nº
AL T connector set	10 Piece(s)	728981

Contents:

[*]		
[8]	T connector	1
[9]	Cylinder screw M5 x 12	2

[10]	Espagnolette support	1

			Nº
Espagnolette support	For Roto Line AL geared-handle	100 Piece(s)	331937

[11]	Roto Line AL geared-handle	1
		→ CTL_1
	Alternatively:	
[a]	Window handle – standard	1 → CTL_1
	Countersunk screw M5 x 30	2
[b]	Handle without escutcheon	1 → CTL_1
	Ring for handle without escutcheon	1
	Mounting plate	1

Height-dependent components

[5]	Striker

			Nº
V.01	9	100 Piece(s)	728918
V.02	9	100 Piece(s)	728920

≤ 1800	2
1801 – 2400	4
> 2400	6

[6]	Cam, insertable

		Nº
Insertable	100 Piece(s)	334671

≤ 1800	2
1801 – 2400	4
> 2400	6

Width-dependent components

[*] TiS central hinge | 200 kg

			№
SF	Special colour	1 Piece(s)	775014

Contents:

[*]		#
[30]	Countersunk screw M5 x 10	4
[48]	Countersunk screw ST4.8 x 19	4
[52]	TiS bearing pin | 200 kg	1
[54]	Clamping support-strip | 200 kg	1
[55]	CL TiS bearing | 200 kg	1
[56]	Turn-Only hinge | 200 kg	1
[57]	TiS Turn-Only bearing bush	4

≤ 1300	–
> 1300	1

[5] Striker

			№
V.01	9	100 Piece(s)	728918
V.02	9	100 Piece(s)	728920

≤ 1300	–
> 1300	1

[6] Cam, insertable

		№
Insertable	100 Piece(s)	334671

≤ 1300	–
> 1300	1

4.5 Floating-mullion hardware

4.5.1 FM | 90 - 160 kg

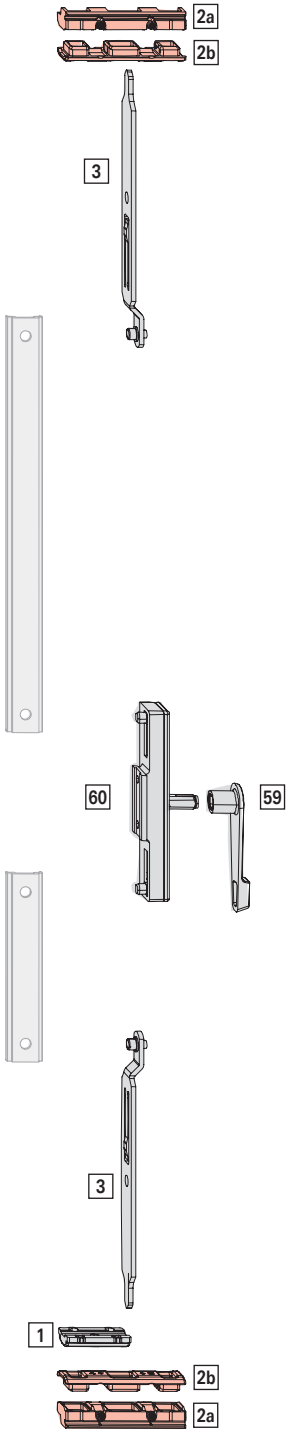

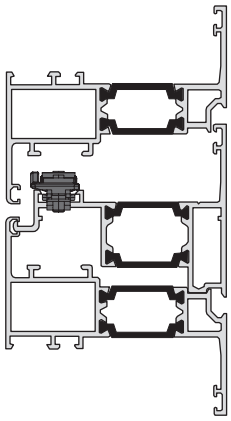

Application range

Sash width **SW** (second opening sash): 200 - 1600 mm

Sash height **SH**: 520 - 2700 mm

Locking side of second opening sash

[*]	FM locking components set	1
		№
FM locking components set	10 Piece(s)	798167

Contents:

[*]		#
[1]	Run-up block	1
[2a]	Multi-ported striker bottom part	2
[2b]	Multi-ported striker top part VB 5/6	2
[3]	Shootbolt rod (length 152; width 19.1)	2
[59]	Operating lever	1
[60]	FM espagnolette	1
	Reducing sleeve (not sh.)	4

4.5.2 FM (second opening sash) | accessible | 90 - 130 kg

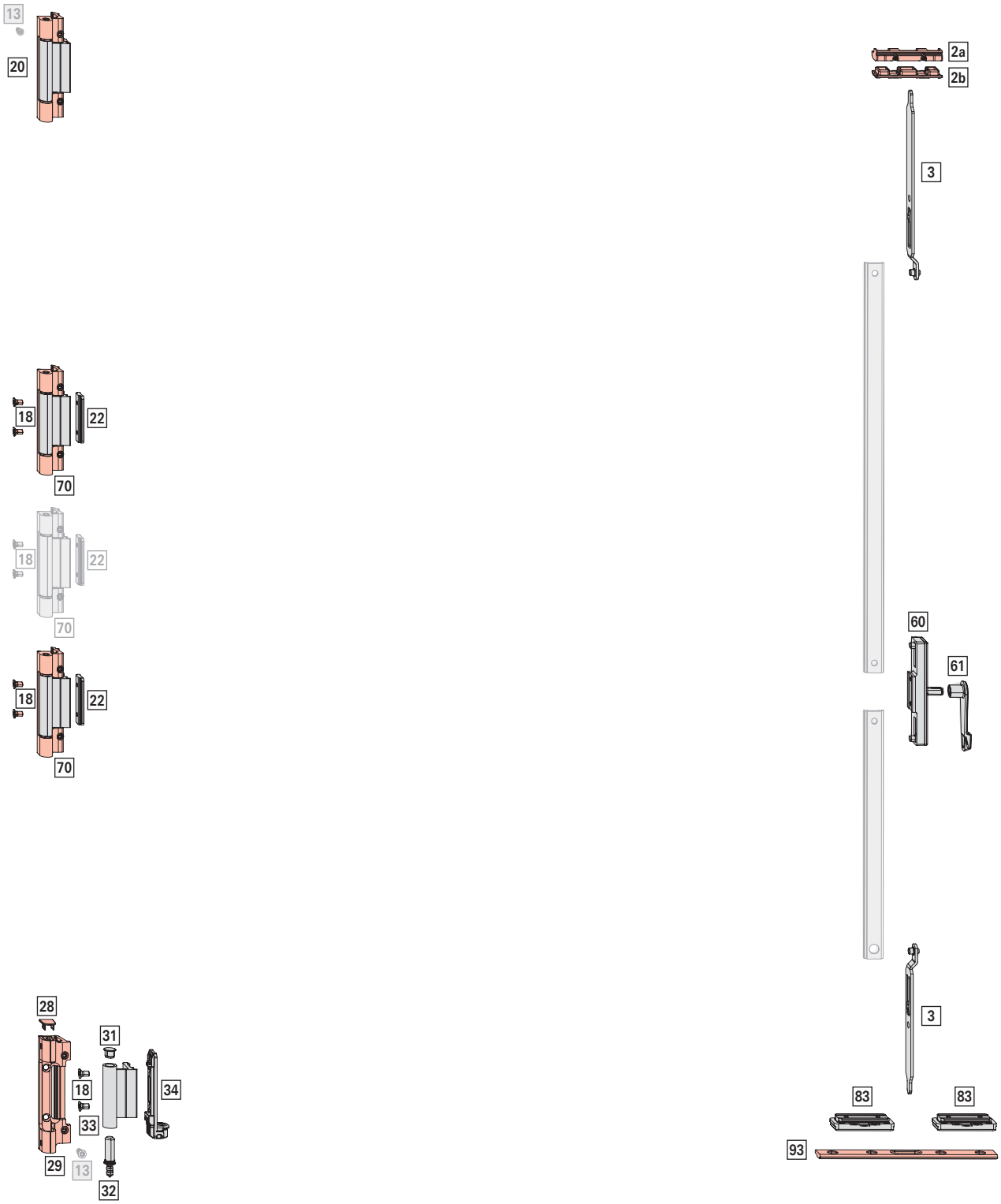

Application range

Sash width **SW** (second opening sash): 800 - 1300 mm

Sash height **SH**: 1800 - 2700 mm

Sash weight **S.kg**: max. 130 kg

Hinge passage **HP**: > 3.5 mm

Basic set

[*] T-O hinge side set | 90 kg; SH ≤ 2700 mm; HP 3.5 mm 1

Alternatively:

[23] T-O-C hinge side set | 130 kg → *from page 280*

				№
Clamp strip version 1	R01.5	Silver	10 Piece(s)	728732
	R05.4	Dark bronze	10 Piece(s)	728733
	R06.2	Jet black	10 Piece(s)	728734
	R07.2	Traffic white	10 Piece(s)	728735
	SF	Special colour	10 Piece(s)	728736
Clamp strip version 2	R01.5	Silver	10 Piece(s)	728737
	R05.4	Dark bronze	10 Piece(s)	728738
	R06.2	Jet black	10 Piece(s)	728739
	R07.2	Traffic white	10 Piece(s)	728740
	SF	Special colour	10 Piece(s)	728741
Clamp strip version 3	SF	Special colour	10 Piece(s)	728742

Contents:

[*]		#
[18]	Countersunk screw M5 x 9	4
[20]	T-O hinge, compl. (including bearing)	1
[22]	Clamping support-strip	1
[28]	Pivot rest end cap	1
[29]	Pivot rest, compl.	1
[31]	Corner hinge end cap	1
[32]	Pivot-rest pin	1
[33]	Corner hinge	1
[34]	Clampable corner bracket, compl.	1

INFO

Only use bearings / clamp strips which have been approved for the profile. Information can be obtained from Roto sales representatives.

[70] T-O central hinge | 130 kg 2

Alternatively:

CL sash and frame component → *from page 267* 3

				№
Clamp strip version 1	R01.5	Silver	50 Piece(s)	728768
	R05.4	Dark bronze	50 Piece(s)	728769
	R06.2	Jet black	50 Piece(s)	728770
	R07.2	Traffic white	50 Piece(s)	728771
	SF	Special colour	50 Piece(s)	728772
Clamp strip version 2	R01.5	Silver	50 Piece(s)	728773
	R05.4	Dark bronze	50 Piece(s)	728774
	R06.2	Jet black	50 Piece(s)	728775
	R07.2	Traffic white	50 Piece(s)	728776
	SF	Special colour	50 Piece(s)	740892
Clamp strip version 3	SF	Special colour	50 Piece(s)	728778

[*] Small parts set 2

for T-O central hinge | 130 kg

		№
Small parts set	100 Piece(s)	728966

Contents:

[*]		#
[22]	Clamping support-strip	1
[18]	Countersunk screw M5 x 9	2

[*] Multi-ported striker set 1

		№
VB 5/6	20 Piece(s)	728914

Contents:

[*]		#
[2a]	Multi-ported striker bottom part	1
[2b]	Multi-ported striker top part	1

[3] Shootbolt rod 2

			№
152	19.1	100 Piece(s)	212144

[*] Floating-mullion run-up block set 1

		№
V.01 V.02	1 Piece(s)	817135

Contents:

[*]		#
[83]	Run-up block 7.5 (two-part)	2
[93]	Extended multi-ported striker	1
	Countersunk screw ST4.8 x 16	4
	(not used)	

INFO

The right-hand run-up block 7.5 (two-part) shown replaces the run-up block 6.5 (two-part) on the first opening sash (T&T / T-O).

Espagnolette and connector

[*]	FM espagnolette set	1
		№
FM espagnolette set	20 Piece(s)	728965

Contents:

[*]		#
[60]	FM espagnolette, internal	1
[61]	Operating lever	1
	Reducing sleeve	2

Height-dependent components

[70] T-O / TiS central hinge | 130 kg
Alternatively:
CL sash and frame component → *from page 267*

				№
Clamp strip version 1	R01.5	Silver	50 Piece(s)	728768
	R05.4	Dark bronze	50 Piece(s)	728769
	R06.2	Jet black	50 Piece(s)	728770
	R07.2	Traffic white	50 Piece(s)	728771
	SF	Special colour	50 Piece(s)	728772
Clamp strip version 2	R01.5	Silver	50 Piece(s)	728773
	R05.4	Dark bronze	50 Piece(s)	728774
	R06.2	Jet black	50 Piece(s)	728775
	R07.2	Traffic white	50 Piece(s)	728776
	SF	Special colour	50 Piece(s)	740892
Clamp strip version 3	SF	Special colour	50 Piece(s)	728778

≤ 1300	–
> 1300	1

[*] Small parts set
for T-O / TiS central hinge | 130 kg and T-O-C central hinge | 160 kg

		№
Small parts set	100 Piece(s)	728966

Contents:

[*]		#
[22]	Clamping support-strip	1
[18]	Countersunk screw M5 x 9	2

≤ 1300	–
> 1300	1

[13] Countersunk screw ST4.8 x 16; special head,
as an additional means of securing the pivot rest

Alternatively for thread engagement ≤ 6 mm:
Rivet nut set, metric → *from page 288*

			№
Countersunk screw	ST4,8x16	100 Piece(s)	728933

≤ 2400	–
> 2400	1

Weight-dependent components

[*]	Upgrade set | 130 kg; S.kg > 90 kg	1
		№
max. 130 kg	10 Piece(s)	728695

Contents:

[*]		#
[13]	Countersunk screw ST4.8 x 16; special head	1
[23]	Fixing connecting-link | 130 kg	1

INFO
From S.kg > 90 kg, the use of a countersunk screw ST4.8 x 16 is mandatory as an additional means of securing the pivot rest (see [13] Height-dependent components).

4.5.3 FM-Su | 90 - 130 kg

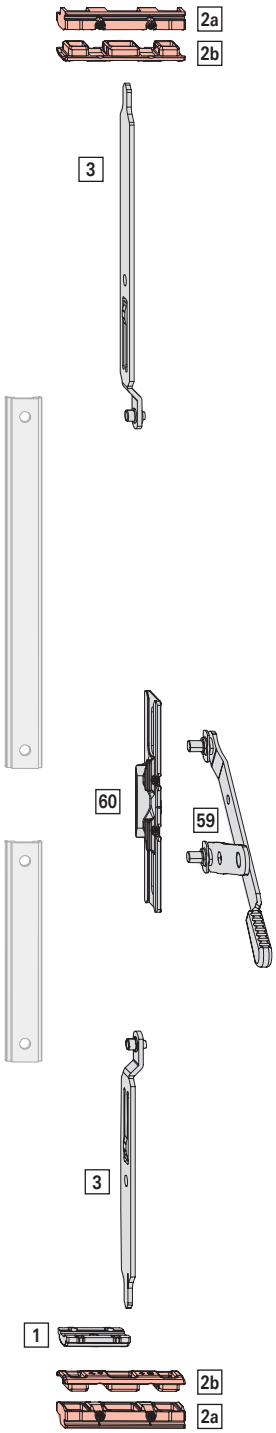

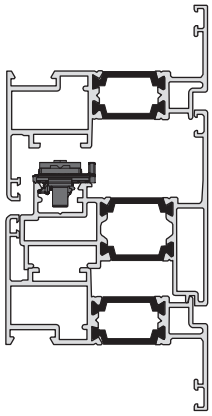

Application range

Sash width **SW** (second opening sash): 200 - 1600 mm

Sash height **SH**: 620 - 2700 mm

INFO
Can only be used in profiles with a double-C-groove.

Locking side of second opening sash

[*] FM-Su espagnolette set; surface-mounted 1

		№
FM-Su espagnolette set; surface-mounted	20 Piece(s)	728964

Contents:

[*]		#
[59]	Toggle lever, compl.	1
[60]	Guide rail, compl.	1

[1] Run-up block 2

		№
Run-up block	100 Piece(s)	212008

[*] Multi-ported striker set 2

		№
VB 1/2	20 Piece(s)	728912
VB 3/4	20 Piece(s)	728913
VB 5/6	20 Piece(s)	728914

Contents:

[*]		#
[2a]	Multi-ported striker bottom part	1
[2b]	Multi-ported striker top part	1

[3] Shootbolt rod 2

				№
Top	191	19.1	100 Piece(s)	341486
		18.3	100 Piece(s)	341487
		17.5	100 Piece(s)	341488
Bottom	152	19.1	100 Piece(s)	212144
		18.3	100 Piece(s)	212145
		17.5	100 Piece(s)	212146

4.5.4 FM-SuN | 90 - 130 kg

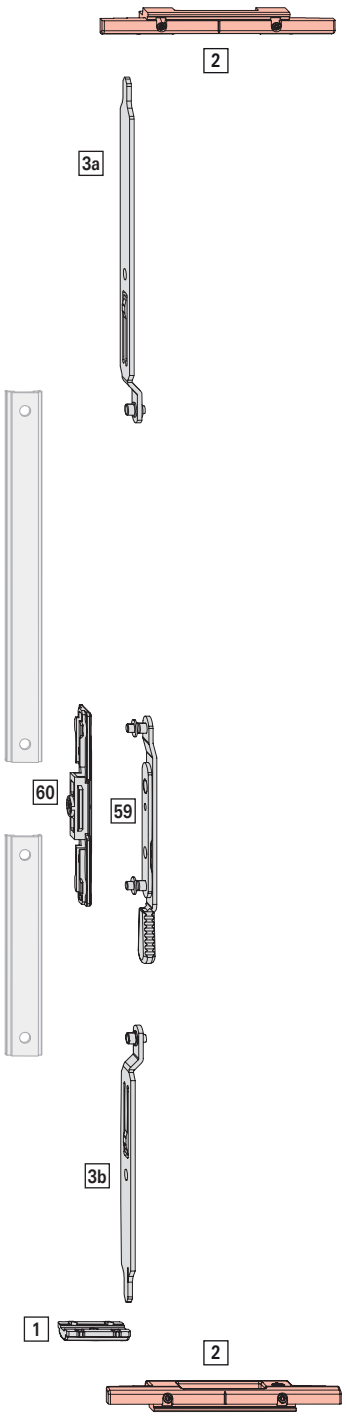

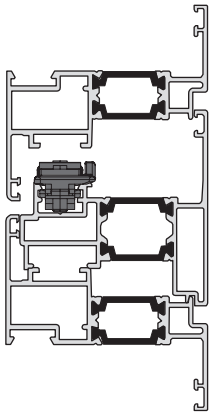

Application range

For narrow floating-mullion profiles with connecting rod groove < 15 mm.

Sash width **SW** (second opening sash): 200 - 1600 mm

Sash height **SH**: 680 - 2700 mm

INFO
Can only be used in profiles with a double-C-groove.

Locking side of second opening sash

[*]	FM-SuN locking components set	1
		№
FM-SuN locking component set	10 Piece(s)	776947

Contents:

[*]		#
[1]	Run-up block	1
[2]	FM-Sh multi-ported striker, compl.	2
[3a]	FM-SuN shootbolt rod, right	2
[3b]	FM-SuN shootbolt rod, left	2
[59]	Toggle lever, compl.	1
[60]	Guide rail, compl.	1

INFO
Connecting rods from the Roto product range cannot be used. Narrower connecting rods are required.

4.5.5 FM-Sh | 90 - 130 kg

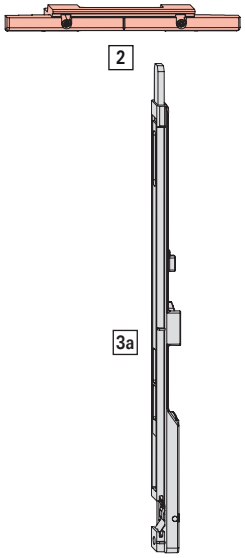

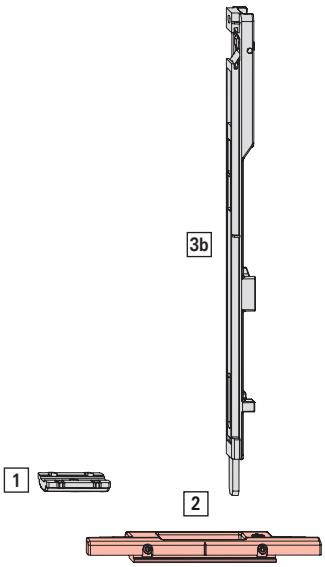

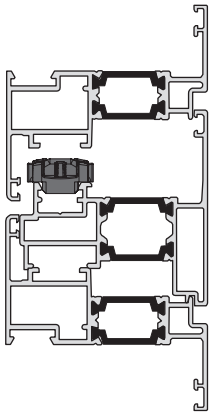

Application range

Sash width **SW** (second opening sash): 200 - 1600 mm

Sash height **SH**: 680 - 2700 mm

Locking side of second opening sash

[*]	FM-Sh locking components set		1
			№
FM-Sh locking components set		10 Piece(s)	728960

Contents:

[*]		#
[1]	Run-up block	1
[2]	FM-Sh multi-ported striker, compl.	2
[3a]	FM-Sh shootbolt, top	1
[3b]	FM-Sh shootbolt, bottom	1
Not sh.	Self-tapping screw ST3.9 x 25	1

4.5.6 FM-R | 90 - 130 kg

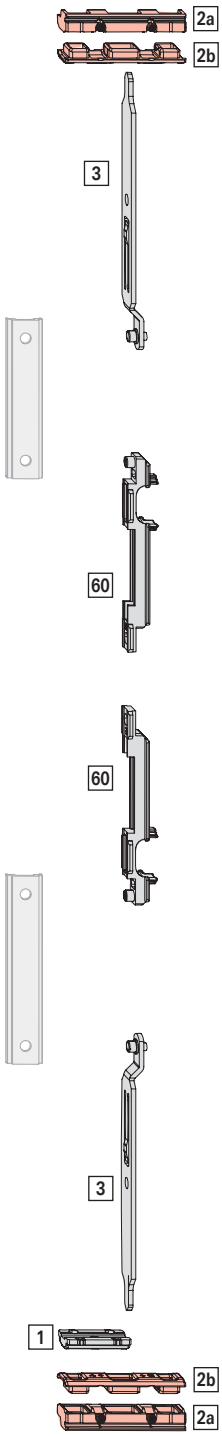

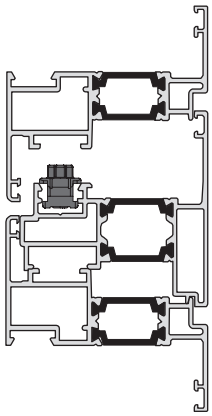

Application range

Sash width **SW** (second opening sash): 200 - 1600 mm

Sash height **SH**: 591 - 2700 mm

INFO
Can only be used in profiles with a double-C-groove.

Locking side of second opening sash

[60] Slider 2

		Nº
19	100 Piece(s)	212141
18	100 Piece(s)	212142
18	100 Piece(s)	212143

[1] Run-up block 2

		Nº
Run-up block	100 Piece(s)	212008

[*] Multi-ported striker set 2

		Nº
VB 1/2	20 Piece(s)	728912
VB 3/4	20 Piece(s)	728913
VB 5/6	20 Piece(s)	728914

Contents:

[*]		#
[2a]	Multi-ported striker bottom part	1
[2b]	Multi-ported striker top part	1

[3] Shootbolt rod 2

				Nº
Top	191	19.1	100 Piece(s)	341486
		18.3	100 Piece(s)	341487
		17.5	100 Piece(s)	341488
Bottom	152	19.1	100 Piece(s)	212144
		18.3	100 Piece(s)	212145
		17.5	100 Piece(s)	212146

4.5.7 FM, couplable (second opening sash) | 90 - 130 kg

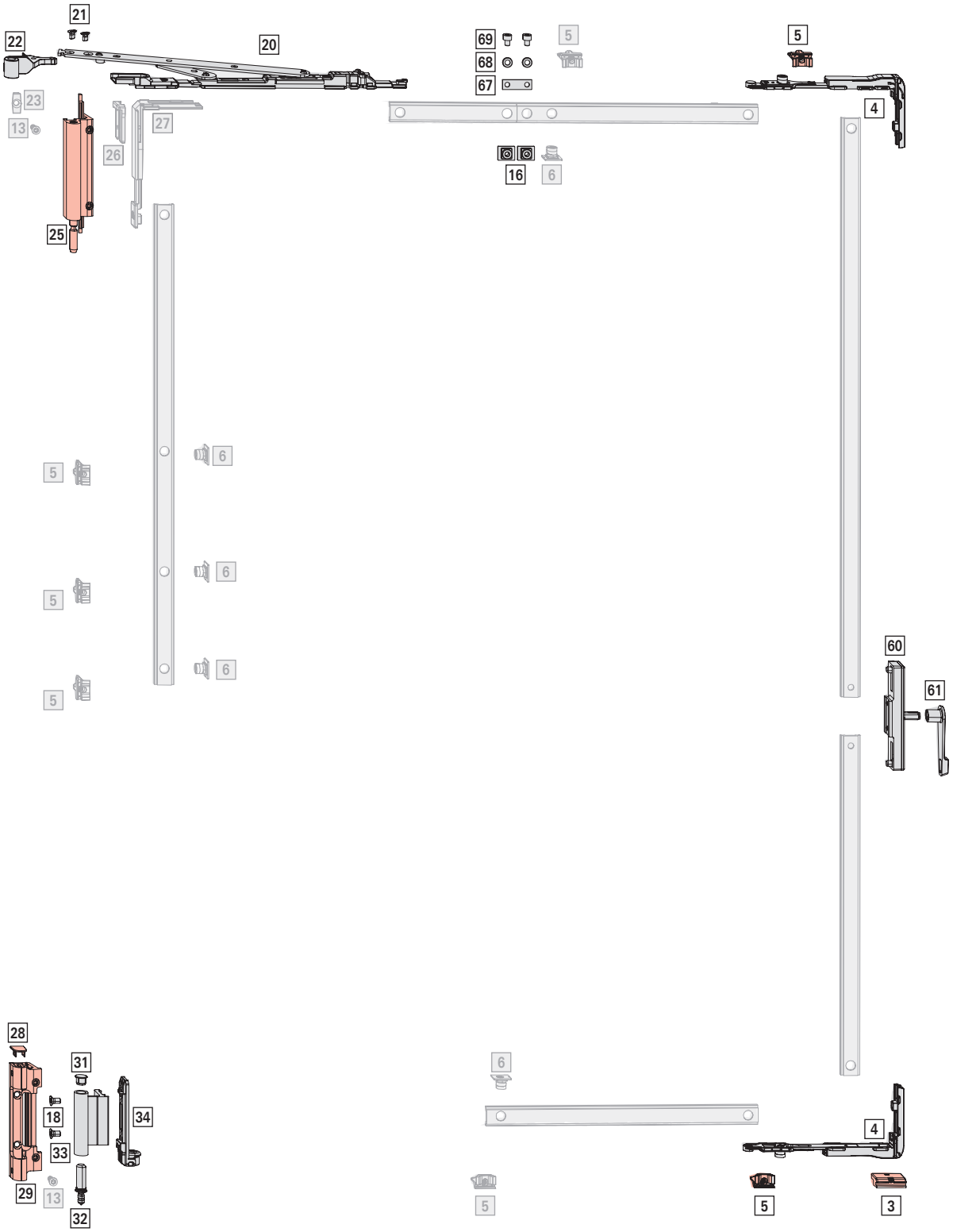

Application range

Sash width **SW** (second opening sash): 605 - 1600 mm

Sash height **SH**: 520 - 2700 mm

Sash weight **S.kg**: max. 130 kg

Hinge passage **HP**: > 3.5 / > 5 mm

Basic set

[*] T&T / TF hinge side set | 90 kg; SH ≤ 2700 mm; HP 3.5 mm — 1

Large packages → *from page 257*

				№
Clamp strip version 1	R01.5	Silver	20 Piece(s)	728787
	R05.4	Dark bronze	10 Piece(s)	728788
	R06.2	Jet black	10 Piece(s)	728789
	R07.2	Traffic white	10 Piece(s)	728790
	SF	Special colour	10 Piece(s)	728791
Clamp strip version 2	R01.5	Silver	10 Piece(s)	728792
	R05.4	Dark bronze	10 Piece(s)	728793
	R06.2	Jet black	10 Piece(s)	728794
	R07.2	Traffic white	10 Piece(s)	728795
	SF	Special colour	10 Piece(s)	728796
Clamp strip version 3	SF	Special colour	10 Piece(s)	728797

Contents:

[*]		#
[18]	Countersunk screw M5 x 9	2
[21]	Countersunk screw M5 x 8	2
[22]	Stay hinge, compl.	1
[25]	Stay bearing, compl.	1
[28]	Pivot rest end cap	1
[29]	Pivot rest, compl.	1
[31]	Corner hinge end cap	1
[32]	Pivot-rest pin	1
[33]	Corner hinge	1
[34]	Clampable corner bracket, compl.	1

INFO

Only use bearings / clamp strips which have been approved for the profile. Information can be obtained from Roto sales representatives.

[20] Sash stay — 1

				№
400	max. 100 kg	160	10 Piece(s)	728785

[4] Corner drive without blocking device, with retaining fork — 2

		№
Corner drive without mishandling device, with retaining fork	50 Piece(s)	728844

[*] Coupler component set — 1

			№
Coupler component set	For coupling a connecting rod	100 Piece(s)	728856

[*]		#
[16]	SEC connector	2
[67]	SEC coupler component, plate	1
[68]	Washer	2
[69]	Cylinder screw M5 x 6	2

[3] Run-up wedge — 1

			№
Run-up wedge	V.01	100 Piece(s)	684282
	V.02	100 Piece(s)	684283

[5] Striker — 2

			№
V.01	9	100 Piece(s)	728918
V.02	9	100 Piece(s)	728920

Espagnolette and connector

[*] FM espagnolette set — 1

		№
FM espagnolette set	20 Piece(s)	728965

Contents:

[*]		#
[60]	FM espagnolette, internal	1
[61]	Operating lever	1
	Reducing sleeve	2

Height-dependent components

[*] CL corner drive set

Large packages → *from page 257*

		№
V.01	20 Piece(s)	728842
V.02	20 Piece(s)	728843

Contents:

[*]		#
[5]	Striker V.01 / V.02	2
[6]	Cam, insertable	2
[26]	Retaining fork	1
[27]	CL corner drive	1

≤ 1300	–
> 1300	1

[5] Striker

			№
V.01	9	100 Piece(s)	728918
V.02	9	100 Piece(s)	728920

≤ 1300	–
1301 – 1800	1
1801 – 2400	2
> 2400	3

[6] Cam, insertable

		№
Insertable	100 Piece(s)	334671

≤ 1300	–
1301 – 1800	1
1801 – 2400	2
> 2400	3

[13] Countersunk screw ST4.8 x 16; special head, as an additional means of securing the pivot rest
Alternatively for thread engagement ≤ 6 mm:
Rivet nut set, metric → *from page 288*

			№
Countersunk screw	ST4,8x16	100 Piece(s)	728933

≤ 2400	–
> 2400	1

[39] Connecting rod, fixed, vertical (CR4) 1
→ *from page 274*

Width-dependent components

[5] Striker

			№
V.01	9	100 Piece(s)	728918
V.02	9	100 Piece(s)	728920

≤ 1300	–
> 1300	2

[6] Cam, insertable

		№
Insertable	100 Piece(s)	334671

≤ 1300	–
> 1300	2

[40] Connecting rod, fixed, horizontal, bottom (CR5)
→ *from page 274*

Weight-dependent components

[*] Upgrade set | 130 kg; S.kg > 90 kg 1

		№
max. 130 kg	10 Piece(s)	728695

Contents:

[*]		#
[13]	Countersunk screw ST4.8 x 16; special head	1
[23]	Fixing connecting-link | 130 kg	1

INFO
From S.kg > 90 kg, the use of a countersunk screw ST4.8 x 16 is mandatory as an additional means of securing the pivot rest (see [13] Height-dependent components).

4.5.8 FM, couplable (second opening sash) | RC 2 | 90 - 130 kg

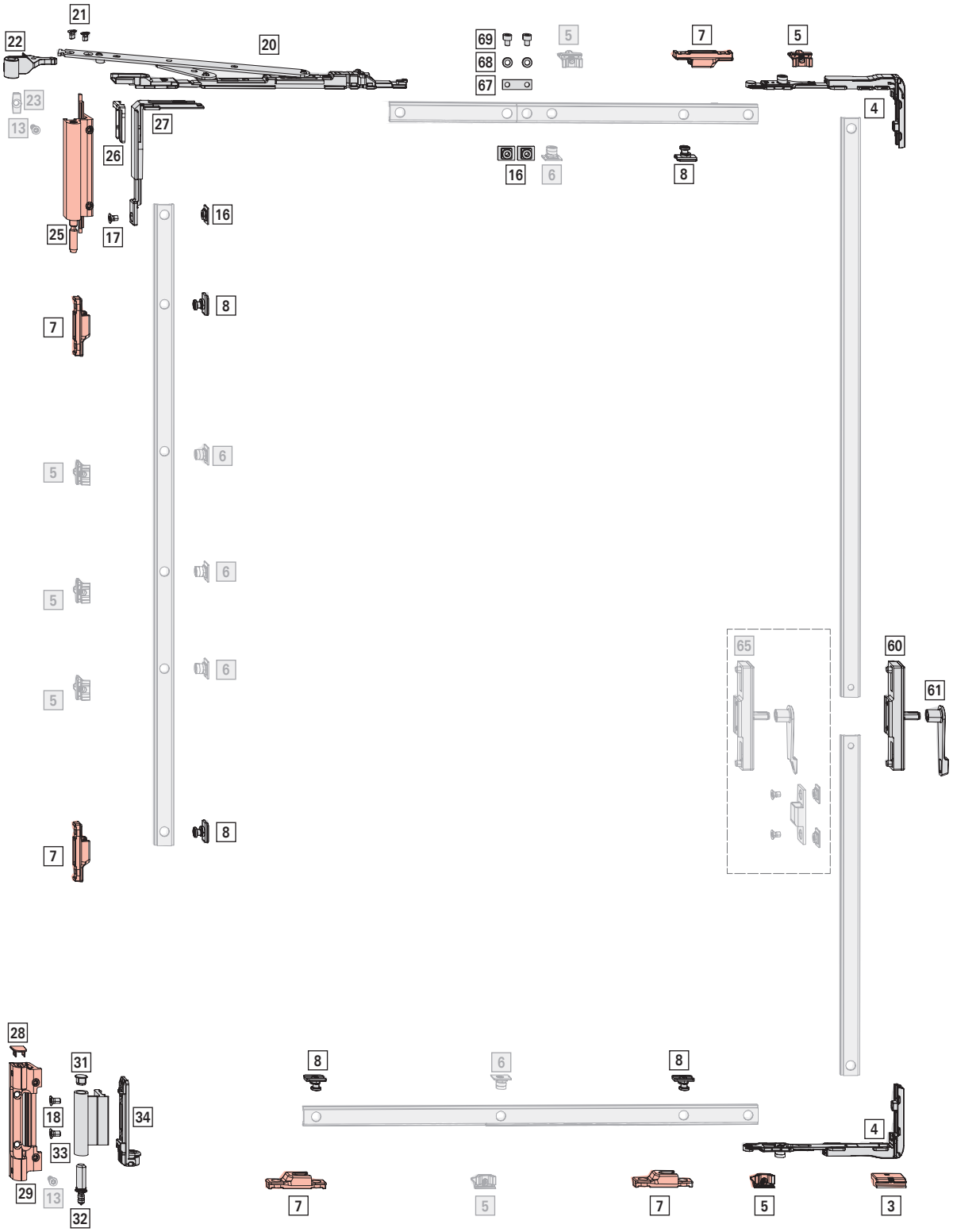

Application range

Sash width **SW** (second opening sash): 725 - 1600 mm

Sash height **SH**: 1020 - 2700 mm

Sash weight **S.kg**: max. 130 kg

Hinge passage **HP**: > 3.5 / > 5 mm

Basic set

[*] T&T / TF hinge side set | 90 kg; SH ≤ 2700 mm; HP 3.5 mm — 1

Large packages → *from page 257*

				№
Clamp strip version 1	R01.5	Silver	20 Piece(s)	728787
	R05.4	Dark bronze	10 Piece(s)	728788
	R06.2	Jet black	10 Piece(s)	728789
	R07.2	Traffic white	10 Piece(s)	728790
	SF	Special colour	10 Piece(s)	728791
Clamp strip version 2	R01.5	Silver	10 Piece(s)	728792
	R05.4	Dark bronze	10 Piece(s)	728793
	R06.2	Jet black	10 Piece(s)	728794
	R07.2	Traffic white	10 Piece(s)	728795
	SF	Special colour	10 Piece(s)	728796
Clamp strip version 3	SF	Special colour	10 Piece(s)	728797

Contents:

[*]		#
[18]	Countersunk screw M5 x 9	2
[21]	Countersunk screw M5 x 8	2
[22]	Stay hinge, compl.	1
[25]	Stay bearing, compl.	1
[28]	Pivot rest end cap	1
[29]	Pivot rest, compl.	1
[31]	Corner hinge end cap	1
[32]	Pivot-rest pin	1
[33]	Corner hinge	1
[34]	Clampable corner bracket, compl.	1

INFO
Only use bearings / clamp strips which have been approved for the profile. Information can be obtained from Roto sales representatives.

[20] Sash stay — 1

				№
400	max. 100 kg	160	10 Piece(s)	728785

[4] Corner drive without blocking device, with retaining fork — 2

		№
Corner drive without mishandling device, with retaining fork	50 Piece(s)	728844

[*] CL SEC corner drive set — 1

Large packages → *from page 257*

		№
V.01 V.02	10 Piece(s)	728944

[*]		#
[16]	SEC connector	1
[17]	Countersunk screw M5 x 7	1
[26]	SEC retaining fork	1
[27]	CL SEC corner drive	1

[7] SEC striker — 5

			№
V.01	9	100 Piece(s)	212637
V.02	9	100 Piece(s)	212638

[8] SEC cam RC 2 — 5

		№
Insertable	100 Piece(s)	447245

[*] Coupler component set — 1

			№
Coupler component set	For coupling a connecting rod	100 Piece(s)	728856

[*]		#
[16]	SEC connector	2
[67]	SEC coupler component, plate	1
[68]	Washer	2
[69]	Cylinder screw M5 x 6	2

[3] Run-up wedge — 1

			№
Run-up wedge	V.01	100 Piece(s)	684282
	V.02	100 Piece(s)	684283

[5] Striker — 2

			№
V.01	9	100 Piece(s)	728918
V.02	9	100 Piece(s)	728920

Espagnolette and connector

[*] FM espagnolette set — 1

Alternative (profile related):
[65] FM SEC espagnolette set → *from page 283*

		№
FM espagnolette set	20 Piece(s)	728965

Contents:

[*]		#
[60]	FM espagnolette, internal	1
[61]	Operating lever	1
	Reducing sleeve	2

Height-dependent components

[5] Striker

			№
V.01	9	100 Piece(s)	728918
V.02	9	100 Piece(s)	728920

≤ 1300	–
1301 – 1800	1
1801 – 2400	2
> 2400	3

[6] Cam, insertable

		№
Insertable	100 Piece(s)	334671

≤ 1300	–
1301 – 1800	1
1801 – 2400	2
> 2400	3

[13] Countersunk screw ST4.8 x 16; special head, as an additional means of securing the pivot rest
Alternatively for thread engagement ≤ 6 mm:
Rivet nut set, metric → *from page 288*

			№
Countersunk screw	ST4,8x16	100 Piece(s)	728933

≤ 2400	–
> 2400	1

Width-dependent components

[5] Striker

			№
V.01	9	100 Piece(s)	728918
V.02	9	100 Piece(s)	728920

≤ 1300	–
> 1300	2

[6] Cam, insertable

		№
Insertable	100 Piece(s)	334671

≤ 1300	–
> 1300	2

Weight-dependent components

[*] Upgrade set | 130 kg; S.kg > 90 kg — 1

		№
max. 130 kg	10 Piece(s)	728695

Contents:

[*]		#
[13]	Countersunk screw ST4.8 x 16; special head	1
[23]	Fixing connecting-link | 130 kg	1

4.5.9 FM, couplable (second opening sash) | RC 3 | 90 - 130 kg

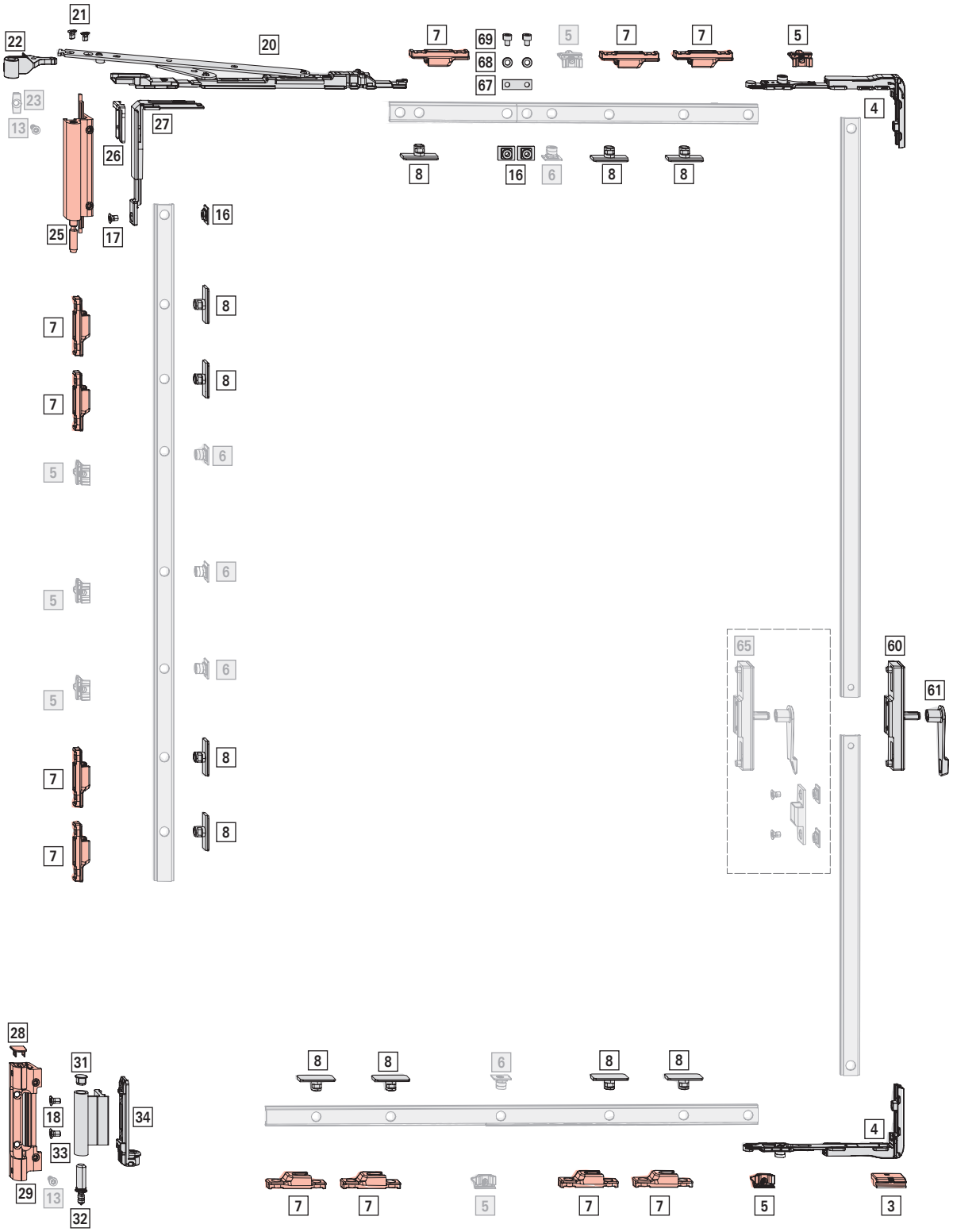

Application range

Sash width **SW** (second opening sash): 800 - 1600 mm

Sash height **SH**: 1170 - 2700 mm

Sash weight **S.kg**: max. 130 kg

Hinge passage **HP**: > 3.5 / > 5 mm

Basic set

[*] T&T / TF hinge side set | 90 kg; SH ≤ 2700 mm; HP 3.5 mm — 1

Large packages → *from page 257*

				№
Clamp strip version 1	R01.5	Silver	20 Piece(s)	728787
	R05.4	Dark bronze	10 Piece(s)	728788
	R06.2	Jet black	10 Piece(s)	728789
	R07.2	Traffic white	10 Piece(s)	728790
	SF	Special colour	10 Piece(s)	728791
Clamp strip version 2	R01.5	Silver	10 Piece(s)	728792
	R05.4	Dark bronze	10 Piece(s)	728793
	R06.2	Jet black	10 Piece(s)	728794
	R07.2	Traffic white	10 Piece(s)	728795
	SF	Special colour	10 Piece(s)	728796
Clamp strip version 3	SF	Special colour	10 Piece(s)	728797

Contents:

[*]		#
[18]	Countersunk screw M5 x 9	2
[21]	Countersunk screw M5 x 8	2
[22]	Stay hinge, compl.	1
[25]	Stay bearing, compl.	1
[28]	Pivot rest end cap	1
[29]	Pivot rest, compl.	1
[31]	Corner hinge end cap	1
[32]	Pivot-rest pin	1
[33]	Corner hinge	1
[34]	Clampable corner bracket, compl.	1

INFO
Only use bearings / clamp strips which have been approved for the profile. Information can be obtained from Roto sales representatives.

[20] Sash stay — 1

				№
400	max. 100 kg	160	10 Piece(s)	728785

[4] Corner drive without blocking device, with retaining fork — 2

		№
Corner drive without mishandling device, with retaining fork	50 Piece(s)	728844

[*] CL SEC corner drive set — 1

Large packages → *from page 257*

		№
V.01 V.02	10 Piece(s)	728944

[*]		#
[16]	SEC connector	1
[17]	Countersunk screw M5 x 7	1
[26]	SEC retaining fork	1
[27]	CL SEC corner drive	1

[7] SEC striker — 11

			№
V.01	9	100 Piece(s)	212637
V.02	9	100 Piece(s)	212638

[8] SEC cam RC 3 — 11

		№
Insertable	100 Piece(s)	447245

[*] Coupler component set — 1

			№
Coupler component set	For coupling a connecting rod	100 Piece(s)	728856

[*]		#
[16]	SEC connector	2
[67]	SEC coupler component, plate	1
[68]	Washer	2
[69]	Cylinder screw M5 x 6	2

[3] Run-up wedge — 1

			№
Run-up wedge	V.01	100 Piece(s)	684282
	V.02	100 Piece(s)	684283

[5] Striker — 2

			№
V.01	9	100 Piece(s)	728918
V.02	9	100 Piece(s)	728920

Espagnolette and connector

[*] FM espagnolette set — 1

Alternative (profile related):

[65] FM SEC espagnolette set → *from page 283*

		№
FM espagnolette set	20 Piece(s)	728965

Contents:

[*]		#
[60]	FM espagnolette, internal	1
[61]	Operating lever	1
	Reducing sleeve	2

Height-dependent components

[5] Striker

			№
V.01	9	100 Piece(s)	728918
V.02	9	100 Piece(s)	728920

≤ 1300	–
1301 – 1800	1
1801 – 2400	2
> 2400	3

[6] Cam, insertable

		№
Insertable	100 Piece(s)	334671

≤ 1300	–
1301 – 1800	1
1801 – 2400	2
> 2400	3

[13] Countersunk screw ST4.8 x 16; special head, as an additional means of securing the pivot rest
Alternatively for thread engagement ≤ 6 mm:
Rivet nut set, metric → *from page 288*

			№
Countersunk screw	ST4,8x16	100 Piece(s)	728933

≤ 2400	–
> 2400	1

Width-dependent components

[5] Striker

			№
V.01	9	100 Piece(s)	728918
V.02	9	100 Piece(s)	728920

≤ 1300	–
> 1300	2

[6] Cam, insertable

		№
Insertable	100 Piece(s)	334671

≤ 1300	–
> 1300	2

Weight-dependent components

[*] Upgrade set | 130 kg; S.kg > 90 kg — 1

		№
max. 130 kg	10 Piece(s)	728695

Contents:

[*]		#
[13]	Countersunk screw ST4.8 x 16; special head	1
[23]	Fixing connecting-link | 130 kg	1

4.5.10 FM, couplable (second opening sash) | 160 kg

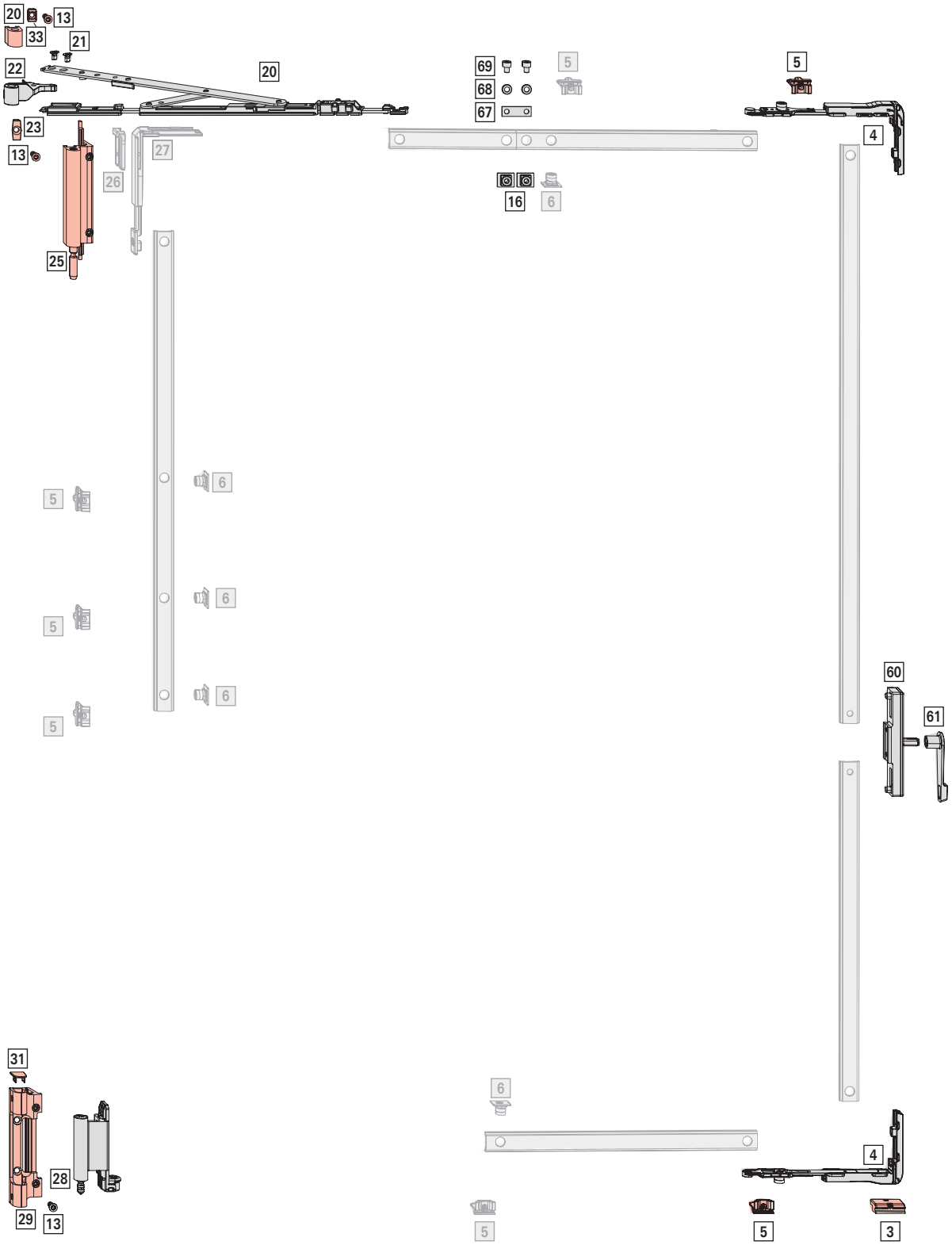

Application range

Sash width **SW** (second opening sash): 770 - 1600 mm

Sash height **SH**: 520 - 3000 mm

Sash weight **S.kg**: max. 130 kg

Hinge passage: > 3.5 mm

Basic set

[*] T&T / TF hinge side set | 160 kg — 1

					№
Clamp strip version 1	R01.5	Silver	Left	10 Piece(s)	793411
			Right	10 Piece(s)	793410
	R05.4	Dark bronze	Left	10 Piece(s)	793417
			Right	10 Piece(s)	793416
	R06.2M	Jet black, matt	Left	10 Piece(s)	793413
			Right	10 Piece(s)	793412
	R07.2	Traffic white	Left	10 Piece(s)	793415
			Right	10 Piece(s)	793414
	SF	Special colour	Left	10 Piece(s)	793419
			Right	10 Piece(s)	793418
	Roh	Untreated	Left	10 Piece(s)	793421
			Right	10 Piece(s)	793420
Clamp strip version 2	R01.5	Silver	Left	10 Piece(s)	793425
			Right	10 Piece(s)	793424
	R05.4	Dark bronze	Left	10 Piece(s)	793431
			Right	10 Piece(s)	793430
	R06.2M	Jet black, matt	Left	10 Piece(s)	793427
			Right	10 Piece(s)	793426
	R07.2	Traffic white	Left	10 Piece(s)	793429
			Right	10 Piece(s)	793428
	SF	Special colour	Left	10 Piece(s)	793433
			Right	10 Piece(s)	793432
	Roh	Untreated	Left	10 Piece(s)	793435
			Right	10 Piece(s)	793434
Clamp strip version 3	SF	Special colour	Left	10 Piece(s)	793437
			Right	10 Piece(s)	793436
	Roh	Untreated	Left	10 Piece(s)	793439
			Right	10 Piece(s)	793438

INFO
Untreated components for users who intend to paint the component themselves.

Contents:

[*]		#
[13]	Countersunk screw ST4.8 x 16; special head	3
[20]	Stay hinge, compl. | 160 kg	1
[21]	Countersunk screw M5 x 8	2
[22]	Stay bearing, compl. | 160 kg	1
[23]	Fixing connecting-link | 130 kg	1
[25]	Counter bearing	1
[28]	Corner hinge, compl. | 160 kg	1
[29]	Pivot rest, compl. | 160 kg	1
[31]	Pivot rest end cap	1
[33]	Fixing connecting-link | 160 kg	1

INFO
Only use bearings / clamp strips which have been approved for the profile. Information can be obtained from Roto sales representatives.

[18] Sash stay — 1

				№
620	max. 160 kg	190	10 Piece(s)	793404

[4] Corner drive without blocking device, with retaining fork — 2

		№
Corner drive without mishandling device, with retaining fork	50 Piece(s)	728844

[*] Coupler component set — 1

			№
Coupler component set	For coupling a connecting rod	100 Piece(s)	728856

[*]		#
[16]	SEC connector	2
[67]	SEC coupler component, plate	1
[68]	Washer	2
[69]	Cylinder screw M5 x 6	2

[3] Run-up wedge — 1

			№
Run-up wedge	V.01	100 Piece(s)	684282
	V.02	100 Piece(s)	684283

[5] Striker — 2

			№
V.01	9	100 Piece(s)	728918
V.02	9	100 Piece(s)	728920

Espagnolette and connector

[*]	FM espagnolette set		1
			№
FM espagnolette set		20 Piece(s)	728965

Height-dependent components

[*]	CL corner drive set Large packages → *from page 257*	
		№
V.01	20 Piece(s)	728842
V.02	20 Piece(s)	728843

Contents:

[*]		#
[5]	Striker V.01 / V.02	2
[6]	Cam, insertable	2
[26]	Retaining fork	1
[27]	CL corner drive	1

≤ 1300	–
> 1300	1

[5]	Striker		
			№
V.01	9	100 Piece(s)	728918
V.02	9	100 Piece(s)	728920

≤ 1300	–
1301 – 1800	1
1801 – 2400	2
> 2400	3

[6]	Cam, insertable	
		№
Insertable	100 Piece(s)	334671

≤ 1300	–
1301 – 1800	1
1801 – 2400	2
> 2400	3

[13]	Countersunk screw ST4.8 x 16; special head, as an additional means of securing the pivot rest Alternatively for thread engagement ≤ 6 mm:

	Rivet nut set, metric		→ *from page 288*
			№
Countersunk screw	ST4,8x16	100 Piece(s)	728933

≤ 2400	–
> 2400	1

[39]	Connecting rod, fixed, vertical (CR4) → *from page 274*	1

Width-dependent components

[5]	Striker		
			№
V.01	9	100 Piece(s)	728918
V.02	9	100 Piece(s)	728920

≤ 1300	–
> 1300	2

[6]	Cam, insertable	
		№
Insertable	100 Piece(s)	334671

≤ 1300	–
> 1300	2

[40]	Connecting rod, fixed, horizontal, bottom (CR5) → *from page 274*

4.5.11 FM, couplable (second opening sash) | RC 2 | 160 kg

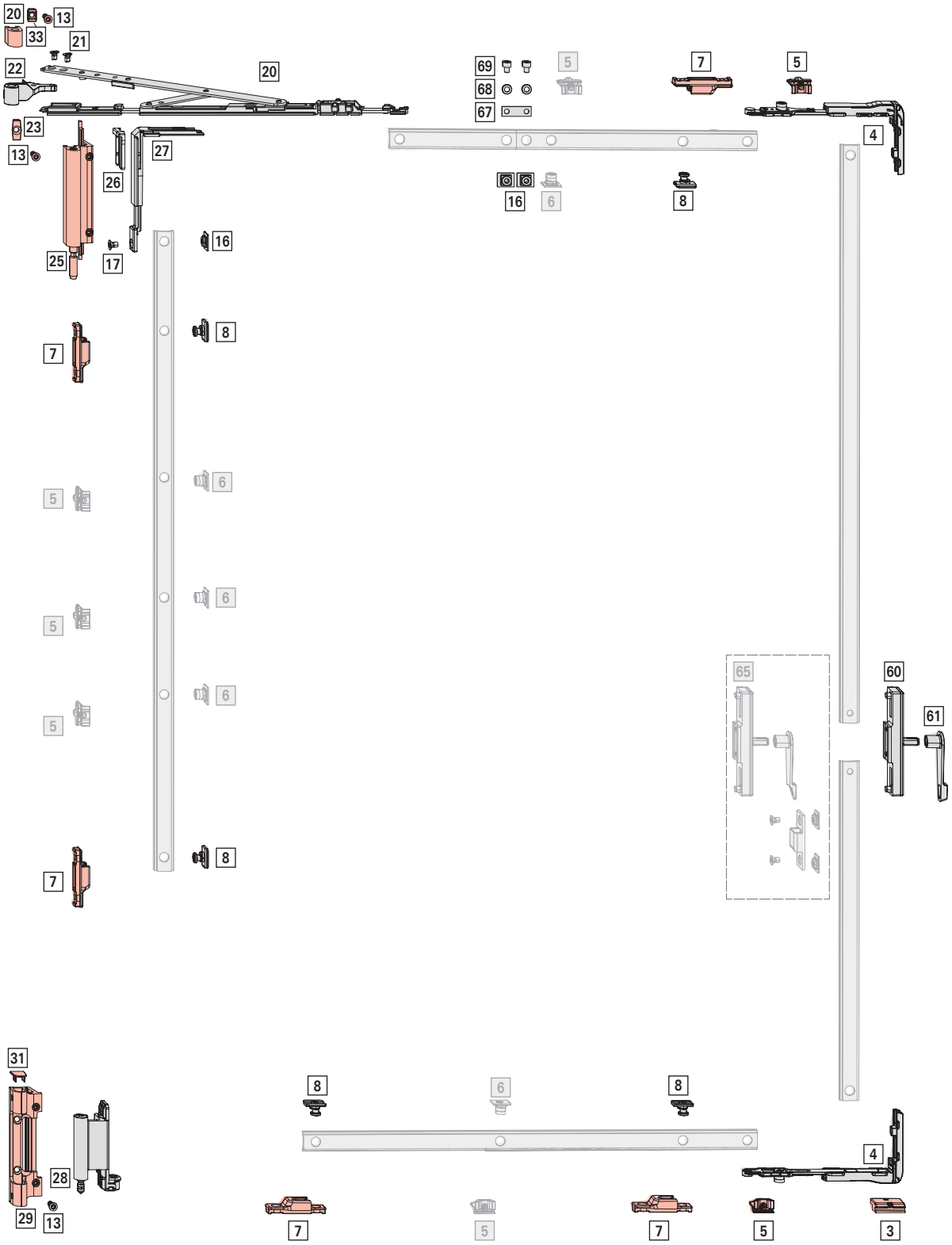

Application range

Sash width **SW** (second opening sash): 890 - 1600 mm

Sash height **SH**: 1020 - 3000 mm

Sash weight **S.kg**: max. 130 kg

Hinge passage: > 3.5 mm

Basic set

[*] T&T / TF hinge side set | 160 kg 1

					№
Clamp strip version 1	R01.5	Silver	Left	10 Piece(s)	793411
			Right	10 Piece(s)	793410
	R05.4	Dark bronze	Left	10 Piece(s)	793417
			Right	10 Piece(s)	793416
	R06.2M	Jet black, matt	Left	10 Piece(s)	793413
			Right	10 Piece(s)	793412
	R07.2	Traffic white	Left	10 Piece(s)	793415
			Right	10 Piece(s)	793414
	SF	Special colour	Left	10 Piece(s)	793419
			Right	10 Piece(s)	793418
	Roh	Untreated	Left	10 Piece(s)	793421
			Right	10 Piece(s)	793420
Clamp strip version 2	R01.5	Silver	Left	10 Piece(s)	793425
			Right	10 Piece(s)	793424
	R05.4	Dark bronze	Left	10 Piece(s)	793431
			Right	10 Piece(s)	793430
	R06.2M	Jet black, matt	Left	10 Piece(s)	793427
			Right	10 Piece(s)	793426
	R07.2	Traffic white	Left	10 Piece(s)	793429
			Right	10 Piece(s)	793428
	SF	Special colour	Left	10 Piece(s)	793433
			Right	10 Piece(s)	793432
	Roh	Untreated	Left	10 Piece(s)	793435
			Right	10 Piece(s)	793434
Clamp strip version 3	SF	Special colour	Left	10 Piece(s)	793437
			Right	10 Piece(s)	793436
	Roh	Untreated	Left	10 Piece(s)	793439
			Right	10 Piece(s)	793438

INFO
Untreated components for users who intend to paint the component themselves.

Contents:

[*]		#
[13]	Countersunk screw ST4.8 x 16; special head	3
[20]	Stay hinge, compl. | 160 kg	1
[21]	Countersunk screw M5 x 8	2
[22]	Stay bearing, compl. | 160 kg	1
[23]	Fixing connecting-link | 130 kg	1
[25]	Counter bearing	1
[28]	Corner hinge, compl. | 160 kg	1
[29]	Pivot rest, compl. | 160 kg	1
[31]	Pivot rest end cap	1
[33]	Fixing connecting-link | 160 kg	1

INFO
Only use bearings / clamp strips which have been approved for the profile. Information can be obtained from Roto sales representatives.

[18] Sash stay 1

				№
620	max. 160 kg	190	10 Piece(s)	793404

[4] Corner drive without blocking device, with retaining fork 2

		№
Corner drive without mishandling device, with retaining fork	50 Piece(s)	728844

[*] CL SEC corner drive set 1

Large packages → *from page 257*

		№
V.01 V.02	10 Piece(s)	728944

[*]		#
[16]	SEC connector	1
[17]	Countersunk screw M5 x 7	1
[26]	SEC retaining fork	1
[27]	CL SEC corner drive	1

[7] SEC striker 5

			№
V.01	9	100 Piece(s)	212637
V.02	9	100 Piece(s)	212638

[8] SEC cam RC 2 5

		№
Insertable	100 Piece(s)	447245

[*]	Coupler component set			1
				№
Coupler component set	For coupling a connecting rod		100 Piece(s)	728856

[*]		#
[16]	SEC connector	2
[67]	SEC coupler component, plate	1
[68]	Washer	2
[69]	Cylinder screw M5 x 6	2

[3]	Run-up wedge		1
			№
Run-up wedge	V.01	100 Piece(s)	684282
	V.02	100 Piece(s)	684283

[5]	Striker		2
			№
V.01	9	100 Piece(s)	728918
V.02	9	100 Piece(s)	728920

Espagnolette and connector

[*]	FM espagnolette set		1
	Alternative (profile related):		
[65]	FM SEC espagnolette set	→ *from page 283*	
			№
FM espagnolette set		20 Piece(s)	728965

Contents:

[*]		#
[60]	FM espagnolette, internal	1
[61]	Operating lever	1
	Reducing sleeve	2

Height-dependent components

[5]	Striker		
			№
V.01	9	100 Piece(s)	728918
V.02	9	100 Piece(s)	728920

≤ 1300	–
1301 – 1800	1
1801 – 2400	2
> 2400	3

[6]	Cam, insertable	
		№
Insertable	100 Piece(s)	334671

≤ 1300	–
1301 – 1800	1
1801 – 2400	2
> 2400	3

[13]	**Countersunk screw ST4.8 x 16; special head**, as an additional means of securing the pivot rest Alternatively for thread engagement ≤ 6 mm: Rivet nut set, metric → *from page 288*		
			№
Countersunk screw	ST4,8x16	100 Piece(s)	728933

≤ 2400	–
> 2400	1

Width-dependent components

[5]	Striker		
			№
V.01	9	100 Piece(s)	728918
V.02	9	100 Piece(s)	728920

≤ 1300	–
> 1300	2

[6]	Cam, insertable	
		№
Insertable	100 Piece(s)	334671

≤ 1300	–
> 1300	2

4.5.12 FM, couplable (second opening sash) | RC 3 | 160 kg

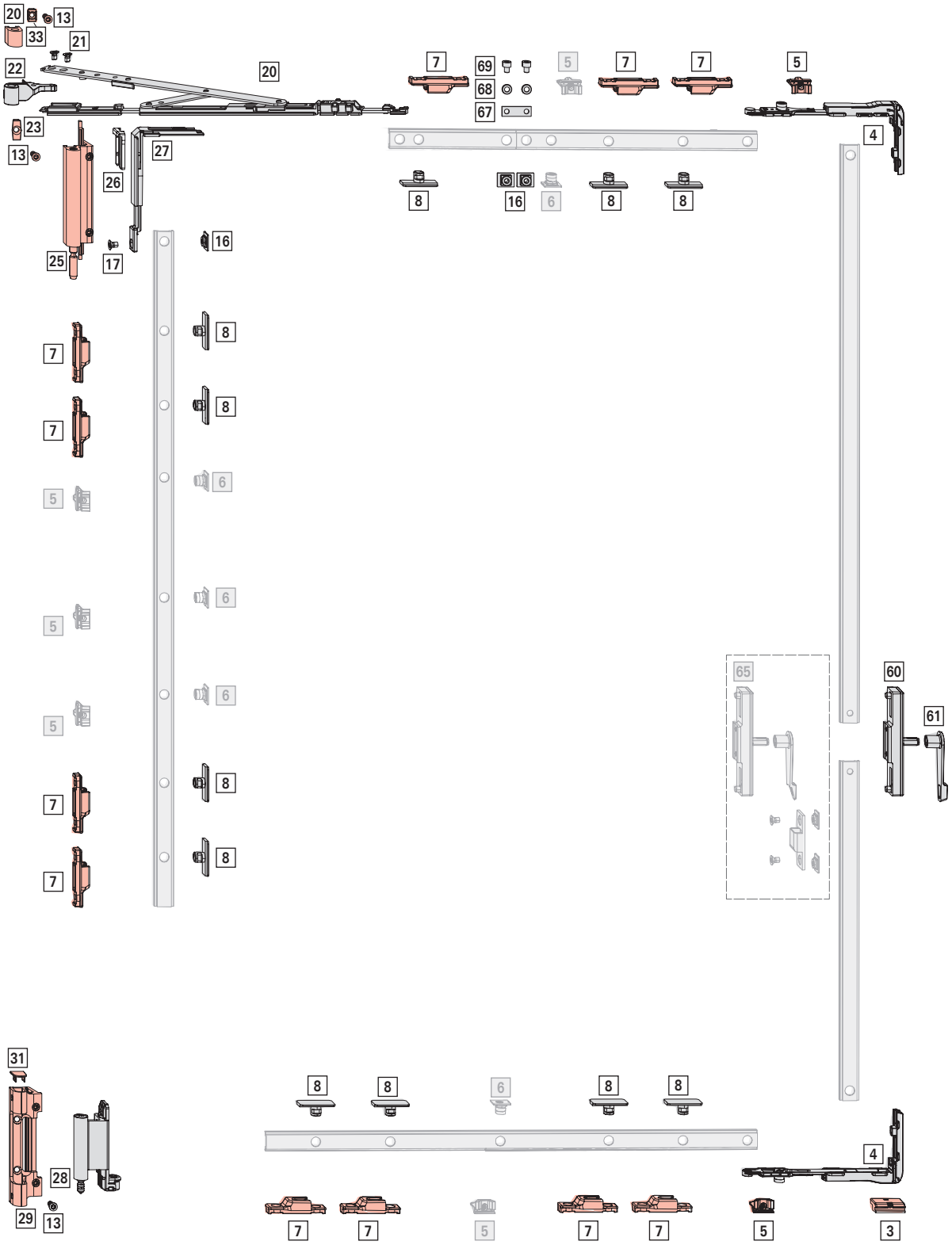

Application range

Sash width **SW** (second opening sash): 1140 - 1600 mm

Sash height **SH**: 1170 - 3000 mm

Sash weight **S.kg**: max. 130 kg

Hinge passage: > 3.5 mm

Basic set

[*] T&T / TF hinge side set | 160 kg 1

					№
Clamp strip version 1	R01.5	Silver	Left	10 Piece(s)	793411
			Right	10 Piece(s)	793410
	R05.4	Dark bronze	Left	10 Piece(s)	793417
			Right	10 Piece(s)	793416
	R06.2M	Jet black, matt	Left	10 Piece(s)	793413
			Right	10 Piece(s)	793412
	R07.2	Traffic white	Left	10 Piece(s)	793415
			Right	10 Piece(s)	793414
	SF	Special colour	Left	10 Piece(s)	793419
			Right	10 Piece(s)	793418
	Roh	Untreated	Left	10 Piece(s)	793421
			Right	10 Piece(s)	793420
Clamp strip version 2	R01.5	Silver	Left	10 Piece(s)	793425
			Right	10 Piece(s)	793424
	R05.4	Dark bronze	Left	10 Piece(s)	793431
			Right	10 Piece(s)	793430
	R06.2M	Jet black, matt	Left	10 Piece(s)	793427
			Right	10 Piece(s)	793426
	R07.2	Traffic white	Left	10 Piece(s)	793429
			Right	10 Piece(s)	793428
	SF	Special colour	Left	10 Piece(s)	793433
			Right	10 Piece(s)	793432
	Roh	Untreated	Left	10 Piece(s)	793435
			Right	10 Piece(s)	793434
Clamp strip version 3	SF	Special colour	Left	10 Piece(s)	793437
			Right	10 Piece(s)	793436
	Roh	Untreated	Left	10 Piece(s)	793439
			Right	10 Piece(s)	793438

INFO
Untreated components for users who intend to paint the component themselves.

Contents:

[*]		#
[13]	Countersunk screw ST4.8 x 16; special head	3
[20]	Stay hinge, compl. | 160 kg	1
[21]	Countersunk screw M5 x 8	2
[22]	Stay bearing, compl. | 160 kg	1
[23]	Fixing connecting-link | 130 kg	1
[25]	Counter bearing	1
[28]	Corner hinge, compl. | 160 kg	1
[29]	Pivot rest, compl. | 160 kg	1
[31]	Pivot rest end cap	1
[33]	Fixing connecting-link | 160 kg	1

INFO
Only use bearings / clamp strips which have been approved for the profile. Information can be obtained from Roto sales representatives.

[18] Sash stay 1

				№
620	max. 160 kg	190	10 Piece(s)	793404

[4] Corner drive without blocking device, with retaining fork 2

		№
Corner drive without mishandling device, with retaining fork	50 Piece(s)	728844

[*] CL SEC corner drive set 1

Large packages → *from page 257*

		№
V.01 V.02	10 Piece(s)	728944

[*]		#
[16]	SEC connector	1
[17]	Countersunk screw M5 x 7	1
[26]	SEC retaining fork	1
[27]	CL SEC corner drive	1

[7] SEC striker 11

			№
V.01	9	100 Piece(s)	212637
V.02	9	100 Piece(s)	212638

[8] SEC cam RC 3 11

		№
Insertable	100 Piece(s)	447245

[*]	Coupler component set			1
				№
Coupler component set		For coupling a connecting rod	100 Piece(s)	728856

[*]		#
[16]	SEC connector	2
[67]	SEC coupler component, plate	1
[68]	Washer	2
[69]	Cylinder screw M5 x 6	2

[3]	Run-up wedge			1
				№
Run-up wedge		V.01	100 Piece(s)	684282
		V.02	100 Piece(s)	684283

[5]	Striker		2
			№
V.01	9	100 Piece(s)	728918
V.02	9	100 Piece(s)	728920

Espagnolette and connector

[*]	FM espagnolette set		1
	Alternative (profile related):		
[65]	FM SEC espagnolette set	→ *from page 283*	
			№
FM espagnolette set		20 Piece(s)	728965

Contents:

[*]		#
[60]	FM espagnolette, internal	1
[61]	Operating lever	1
	Reducing sleeve	2

Height-dependent components

[5]	Striker		
			№
V.01	9	100 Piece(s)	728918
V.02	9	100 Piece(s)	728920

≤ 1300	–
1301 – 1800	1
1801 – 2400	2
> 2400	3

[6]	Cam, insertable	
		№
Insertable	100 Piece(s)	334671

≤ 1300	–
1301 – 1800	1
1801 – 2400	2
> 2400	3

[13]	**Countersunk screw ST4.8 x 16; special head**, as an additional means of securing the pivot rest Alternatively for thread engagement ≤ 6 mm: Rivet nut set, metric → *from page 288*		
			№
Countersunk screw	ST4,8x16	100 Piece(s)	728933

≤ 2400	–
> 2400	1

Width-dependent components

[5]	Striker		
			№
V.01	9	100 Piece(s)	728918
V.02	9	100 Piece(s)	728920

≤ 1300	–
> 1300	2

[6]	Cam, insertable	
		№
Insertable	100 Piece(s)	334671

≤ 1300	–
> 1300	2

5 Jigs / tools

5.1 Drilling jigs

Sash stay

	№
Sash stay 400, sash stay 600, additional stay arm	810754
Sash stay 640	212154

Stay bearing and pivot rest 130 kg / 160 kg

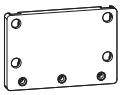

	№
Stay bearing / pivot rest	638665

Geared-handle

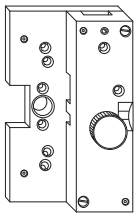

	№
Geared-handle, connecting rod, turn lock	212544

Geared-handle

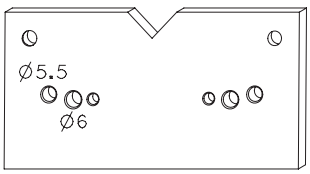

	№
Roto Line AL geared-handle	333473

Flush-encased gearbox and handle without escutcheon

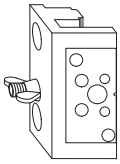

	№
Flush-encased gearbox and handle without escutcheon	365361

Flush-encased gearbox with Roto Line handle

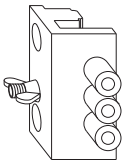

	№
Flush-encased gearbox with / without mishandling device	212155

Connecting rod

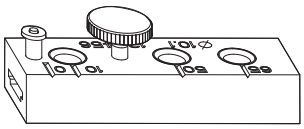

	№
Connecting rod	333472

Bearing 200 kg

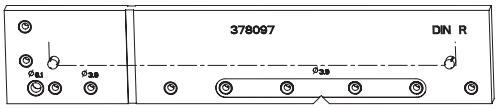

	№
Bearing, 200 kg	378097

Bearing and hinge 300 kg

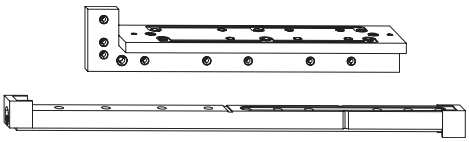

	№
Bearing and hinge, 300 kg	457350

Striker

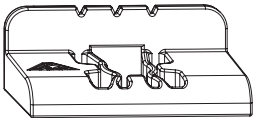

	№
Striker	774540

5.2 Positioning jigs

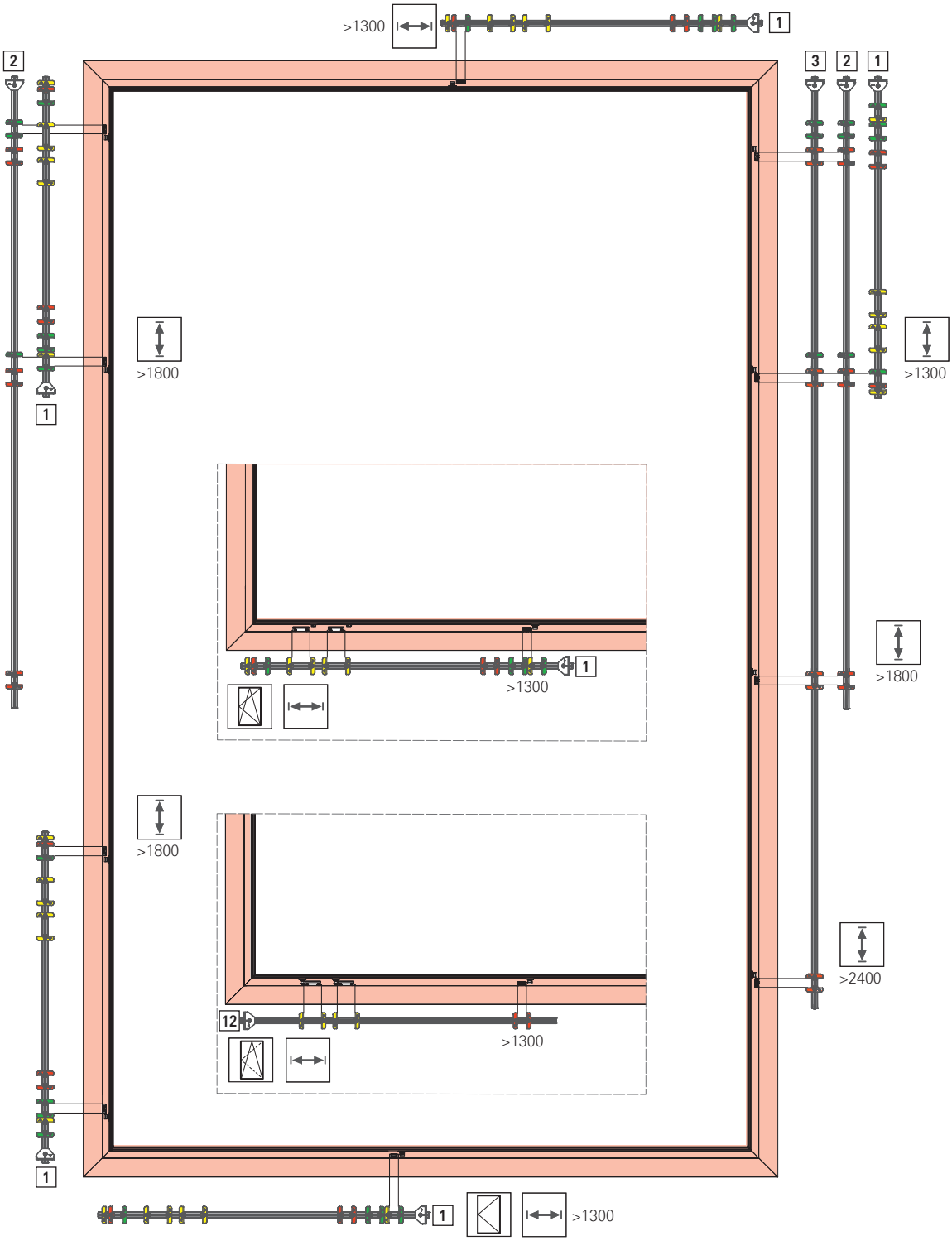

Positioning jigs, horizontal

				№
Positioning jig, short	1300 – 1600 mm	–	1 Piece(s)	739601
Positioning jig, short, 180 kg	1300 – 1600 mm	180 kg	1 Piece(s)	768934

Positioning jigs, vertical

				№
Positioning jig, short	1300 – 1800 mm	–	1 Piece(s)	739601
Positioning jig, medium	1801 – 2400 mm		1 Piece(s)	739602
Positioning jig, long	2401 – 3000 mm		1 Piece(s)	739600

Size-specific combinations:

Description	Assignment	Position	Application range	Weight	T&T	TF	T-O	TiS
Positioning jig, short	[1]	Espagnolette side	SH 1301 – 1800 mm	–	■	■	■	–
Positioning jig, medium	[2]		SH 1801 – 2400 mm	–	■	■	■	–
Positioning jig, short	[1]	Hinge side	SH 1301 – 1800 mm	–	■	■	–	–
Positioning jig, long	[2]		SH 1801 – 2400 mm	–	■	■	–	–
Positioning jig, medium	[3]		SH > 2400 mm	–	■	■	–	–
Positioning jig, short	[1]	Horizontal at the top	SW > 1300 mm	–	■	■	■	–
Positioning jig, short	[1]	Horizontal at the bottom	SW > 1300 mm	–	■	■	–	–
Positioning jig, short, 180 kg	[12]		SW > 1300 mm	> 180 kg	■	■	–	–

5.3 Tools

5.3.1 Hexalobular socket screwdriver

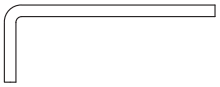

	№
Hexalobular socket screwdriver T10	625172
Hexalobular socket screwdriver T15	625173
Hexalobular socket screwdriver T25	563971

5.3.2 Extractor handle

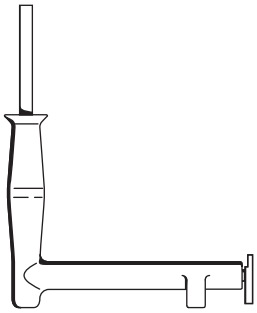

	№
Extractor handle for stay-bearing pin	740068
Replacement blade	230765

5.3.3 Punches

5.3.3.1 Pneumatic punch

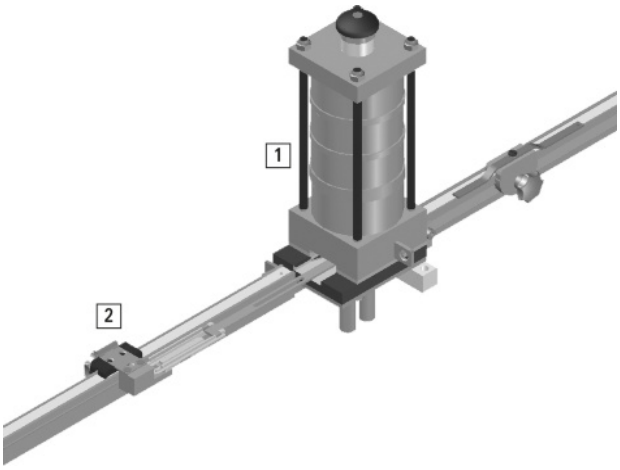

[1] Pneumatic punch – PS 4
[2] Ruler for pneumatic punch – PS 4

	{Koppelstelle}		№
Pneumatic punch – PS 4	Ø 10	1 Piece(s)	350309

Ruler

		№
Ruler for pneumatic punch – PS 3 / PS 4	1 Piece(s)	350314

6 Large packaging for individual components

6.1 Locking components

6.1.1 Corner drives and forks

[19] Corner drive with blocking device

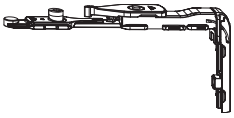

Corner drive with blocking device and retaining fork	100 Piece(s)	490173

[4] Corner drive without blocking device

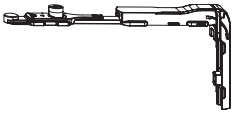

Corner drive without mishandling device, with retaining fork	50 Piece(s)	728844

[43] Corner drive for sash lifter with retaining fork

Corner drive without blocking device and cam, with retaining fork	100 Piece(s)	796229

Articulated corner drive

for arched windows and pitched windows

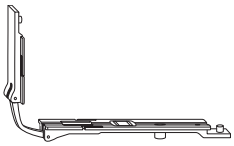

Articulated corner drive	50 Piece(s)	477292

[27] CL corner drive

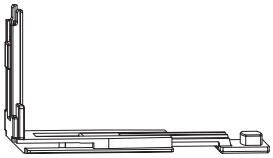

CL corner drive	20 Piece(s)	331013

[26] Retaining fork

for CL corner drive

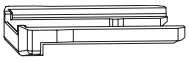

Retaining fork	100 Piece(s)	221772

[27] CL SEC corner drive

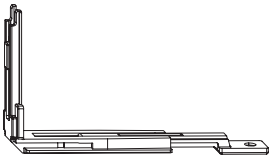

CL SEC corner drive	10 Piece(s)	334359

INFO
Also order the SEC connector → *from page 275*.

[26] SEC retaining fork

for CL SEC corner drive

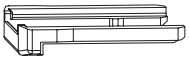

SEC retaining fork	100 Piece(s)	212636

6.1.2 Deadbolt

6.1.2.1 Tilt lock bolt

[4] Tilt lock bolt

for T&T | 90 - 130 kg

Tilt lock bolt	100 Piece(s)	490179

[3] Anti-jemmy device

for T&T | 90 - 130 kg

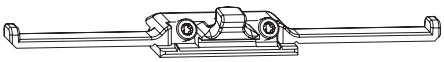

Anti-jemmy device	V.01	100 Piece(s)	728696
	V.02	100 Piece(s)	728697

[12] TF tilt lock bolt

TF tilt lock bolt	100 Piece(s)	334757

[87] Tilt lock bolt (accessible)

for T&T | accessible | 160 kg

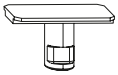

19.5	1 Piece(s)	836208

6.1.2.2 Shootbolt rod

[3a] / [3b] FM-SuN shootbolt rod

for FM-SuN

INFO
Order one DIN R and one DIN L shootbolt rod for each hardware combination and pay attention to the "installation direction" when fitting them (see installation drawing → *from page 484*).

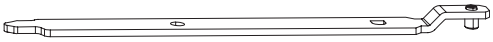

				№
180	14.4	Left	100 Piece(s)	373980
		Right	100 Piece(s)	373979

6.1.2.3 Shootbolt

[3a] / [3b] FM-Sh shootbolt

for FM-Sh

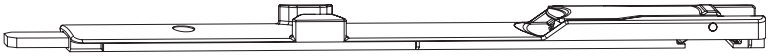

			№
Top	13.8	100 Piece(s)	355560
Bottom	13.8	100 Piece(s)	355561

6.1.3 Run-up blocks

[1] Run-up block (sash)

for T&T / T-O / TiSs

Run-up block	100 Piece(s)	212008

[3] Run-up wedge (frame)

for T&T (S.kg ≥ 160 kg) / TF / T-O

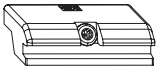

Run-up wedge	V.01	100 Piece(s)	684282
	V.02	100 Piece(s)	684283

[83] Run-up block 7.5 (two-part)

for floating mullion | accessible

Run-up block 7.5 (two-part)	1 Piece(s)	836228

[90] Run-up block sash component

for DF-C | accessible

1 Piece(s)	836225

[91] Run-up block frame component

for DF-C | accessible

1 Piece(s)	836209

6.1.4 Tilt striker

[2] Tilt striker

for T&T / T-O / TiSt

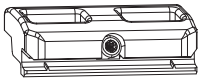

Tilt striker	100 Piece(s)	728860

[2] Tilt striker

for TF

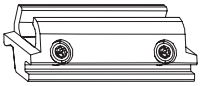

V.01	100 Piece(s)	728973
V.02	100 Piece(s)	728974

[86] Tilt striker (accessible)

for T&T | accessible | 160 kg

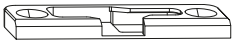

Left	1 Piece(s)	836227
Right	1 Piece(s)	836226

6.1.5 Locking components

Striker, 8 mm installation height

(for an unfavourable sash turning curve)

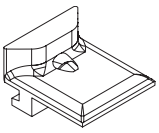

V.01	8	100 Piece(s)	728917
V.02	8	100 Piece(s)	728919

[88] Striker (accessible)

for T&T | accessible | 160 kg

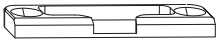

V.01 V.02	1 Piece(s)	821578

[92] SEC striker (accessible)

for T&T | accessible | 160 kg

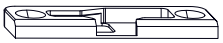

Left	1 Piece(s)	819383
Right	1 Piece(s)	819382

[2] FM-Sh multi-ported striker, compl.

for FM-SuN and FM-Sh

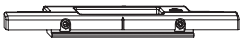

FM-Sh multi-ported striker, compl.	100 Piece(s)	728961

[93] Extended multi-ported striker

for FM, couplable | accessible

3.4	1 Piece(s)	836229

6.1.6 Cam

[89] Cam, insertable (accessible)

for T&T | accessible | 160 kg

17.5	1 Piece(s)	382986

6.2 Hinge side

6.2.1 Top

[22] Stay hinge, compl.

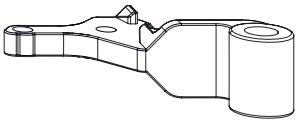

Clamp strip versions 1, 2 and 3	R01.5	Silver	50 Piece(s)	728698
	R05.4	Dark bronze	50 Piece(s)	728699
	R06.2	Jet black	50 Piece(s)	728700
	R07.2	Traffic white	50 Piece(s)	728701
	SF	Special colour	50 Piece(s)	728702

[20] Turn-Only stay hinge, compl.

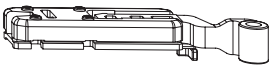

Clamp strip versions 1, 2 and 3	R01.5	Silver	50 Piece(s)	728727
	R05.4	Dark bronze	50 Piece(s)	728728
	R06.2	Jet black	50 Piece(s)	728729
	R07.2	Traffic white	50 Piece(s)	728730
	SF	Special colour	50 Piece(s)	728731

[23] Fixing connecting-link | 130 kg

max. 130 kg	100 Piece(s)	377889

[25] Stay bearing, compl.

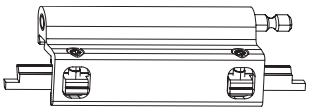

Clamp strip version 1	R01.5	Silver	50 Piece(s)	728703
	R05.4	Dark bronze	50 Piece(s)	728704
	R06.2	Jet black	50 Piece(s)	728705
	R07.2	Traffic white	50 Piece(s)	728706
	SF	Special colour	50 Piece(s)	728707
Clamp strip version 2	R01.5	Silver	50 Piece(s)	728708
	R05.4	Dark bronze	50 Piece(s)	728709
	R06.2	Jet black	50 Piece(s)	728710
	R07.2	Traffic white	50 Piece(s)	728711
	SF	Special colour	50 Piece(s)	728712
Clamp strip version 3	SF	Special colour	50 Piece(s)	728713

6.2.2 Centre

CL sash component

Alternative for T-O central hinge

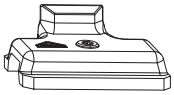

		№
CL sash component	100 Piece(s)	728884

CL frame component

Alternative for T-O central hinge

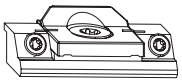

			№
CL frame component	V.01	100 Piece(s)	728885
CL frame component	V.02	100 Piece(s)	728886

[70] T-O hinge, compl. (incl. bearing)

Corresponds to: T-O central hinge | 90 - 130 kg

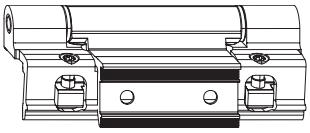

				№
Clamp strip version 1	R01.5	Silver	50 Piece(s)	728768
	R05.4	Dark bronze	50 Piece(s)	728769
	R06.2	Jet black	50 Piece(s)	728770
	R07.2	Traffic white	50 Piece(s)	728771
	SF	Special colour	50 Piece(s)	728772
Clamp strip version 2	R01.5	Silver	50 Piece(s)	728773
	R05.4	Dark bronze	50 Piece(s)	728774
	R06.2	Jet black	50 Piece(s)	728775
	R07.2	Traffic white	50 Piece(s)	728776
	SF	Special colour	50 Piece(s)	740892
Clamp strip version 3	SF	Special colour	50 Piece(s)	728778

[22] Clamping support-strip

for T-O hinge, compl. / T-O central hinge | 90 - 160 kg

		№
Turn-Only sash clamping support-strip	100 Piece(s)	212055

[40] SEC hinge lock sash component

Alternative for T-O central hinge | ≥ 200 kg

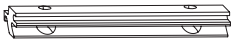

SEC hinge lock sash component	20 Piece(s)	331790

[39] SEC hinge lock frame component

Alternative for T-O central hinge | ≥ 200 kg

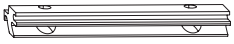

SEC hinge lock frame component	V.01	20 Piece(s)	331788
	V.02	20 Piece(s)	331789

6.2.3 Bottom

6.2.3.1 Pivot rest

[29] Pivot rest, compl.

for S.kg ≤ 130 kg (T&T / TF / T-O / FM)

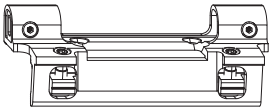

Clamp strip version 1	R01.5	Silver	50 Piece(s)	728826
	R05.4	Dark bronze	50 Piece(s)	728827
	R06.2	Jet black	50 Piece(s)	728828
	R07.2	Traffic white	50 Piece(s)	728829
	SF	Special colour	50 Piece(s)	728830
Clamp strip version 2	R01.5	Silver	50 Piece(s)	728831
	R05.4	Dark bronze	50 Piece(s)	728832
	R06.2	Jet black	50 Piece(s)	728833
	R07.2	Traffic white	50 Piece(s)	728834
	SF	Special colour	50 Piece(s)	728835
Clamp strip version 3	SF	Special colour	50 Piece(s)	728836

[32] Pivot-rest pin

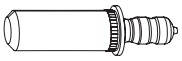

Pivot-rest pin | 130 kg	100 Piece(s)	377443

[28] Pivot rest end cap

Pivot rest end cap	100 Piece(s)	377887

6.2.3.2 Corner hinge

[33] Corner hinge

for S.kg ≤ 130 kg, HP > 3.5 mm

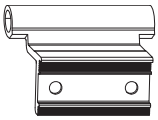

Clamp strip versions 1, 2 and 3	R01.5	Silver	50 Piece(s)	377498
	R05.4	Dark bronze	50 Piece(s)	377502
	R06.2	Jet black	50 Piece(s)	377499
	R07.2	Traffic white	50 Piece(s)	377501
	SF	Special colour	50 Piece(s)	377503

[34] Clampable corner bracket, compl.

for corner hinge

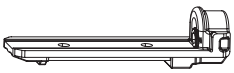

Clampable corner bracket	100 Piece(s)	377444

[31] Corner hinge end cap

Corner hinge end cap	100 Piece(s)	377885

6.3 Espagnolette and connector

6.3.1 Geared-handle

[27] Connector bolt, insertable

SW < 1300 mm

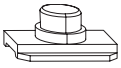

Insertable connector bolt	For Roto Line AL geared-handle	100 Piece(s)	254601

[8] T connector

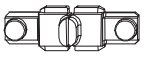

T connector	10 Piece(s)	334754

[14] SEC espagnolette protection

for geared-handle, lockable

SEC espagnolette protection	For Roto Line AL geared-handle	10 Piece(s)	487407

INFO
Also order the SEC connector → *from page 275*.

6.3.2 Flush-encased gearbox

Flush-encased gearbox without blocking device

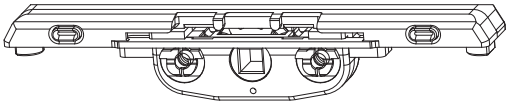

Flush-encased gearbox without mishandling device	24 mm	Coupling point, 10 mm	10 Piece(s)	378338

Flush-encased gearbox with blocking device

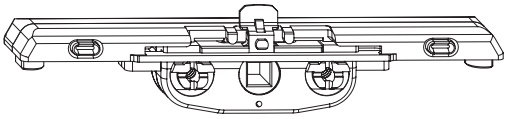

Flush-encased gearbox with mishandling device	24 mm	Coupling point, 10 mm	10 Piece(s)	378337

SEC flush-encased gearbox without blocking device

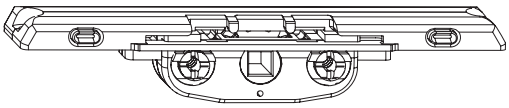

AL SEC flush-encased gearbox without mishandling device	10 Piece(s)	457210

INFO
Also order the SEC connector → *from page 275*.

SEC rebate-clearance reduction ESP

for SEC flush-encased gearbox

SEC rebate-clearance reduction ESP	For Roto Line lock. handles	50 Piece(s)	334360

SEC drilling protection

for SEC flush-encased gearbox

SEC drilling protection	For Roto Line lock. handles	10 Piece(s)	487406

6.3.3 Floating-mullion espagnolette

[59] Toggle lever, compl.

for FM-SuN

Toggle lever, compl.	100 Piece(s)	379013

[60] Guide rail, compl.

for FM-SuN

Guide rail, compl.	10 Piece(s)	634348

6.4 Accessories

6.4.1 Connecting rods

Connecting rod fixed dimensions

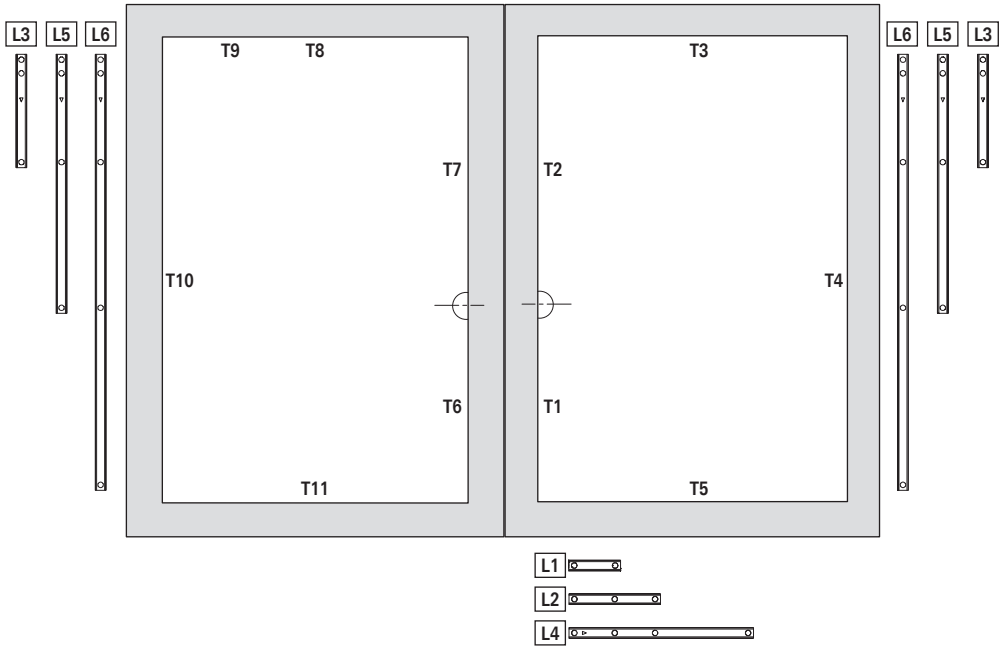

On the hinge side (CR4 / CR10)

SH	T&T			TF		T-O				TiS	Floating mullion	
	130 kg	160 kg	200 kg	130 kg	160 kg	130 kg	160 kg	200 kg	300 kg	130 kg	130 kg	160 kg
≤ 1300	–	–	–	–	–	–	–	–	–	–	–	–
1301 - 1800	L3	L3	L3	L3	L3	–	–	–	–	–	L3 (2x)	L3 (2x)
1801 - 2400	L5	L5	L5	L5	L5	–	–	–	–	–	L5 (2x)	L5 (2x)
> 2400	L6	L6	L6	L6	L6	–	–	–	–	–	L6 (2x)	L6 (2x)

Horizontal at the bottom (CR5)

SW	T&T			TF		T-O				TiS	Floating mullion	
	130 kg	160 kg	200 kg	130 kg	160 kg	130 kg	160 kg	200 kg	300 kg	130 kg	130 kg	160 kg
≤ 1300	–	–	–	L1	–	–	–	–	–	–	–	–
735-1300	–	L2	L2	–	L2	–	–	–	–	–	–	L2
> 1300	L3	L4	L4	L4	L4	L4	L4	L4	L4	–	–	–

					№
L3	536	–	1301 – 1800	10 Piece(s)	729979
L5	1206	–	1801 – 2400	10 Piece(s)	729980
L6	1876	–	2401 – 2700	10 Piece(s)	729981
L1	95	405 – 1300	–	10 Piece(s)	729982
L2	170	735 – 1300	–	10 Piece(s)	772751
L4	606	1301 – 1600	–	10 Piece(s)	769015

INFO
All other connecting rod lengths can be found in the corresponding installation drawings → *from page 419*.

Connecting rods (yard goods, also for ECC-groove)

3 m connecting rod	ECC-groove	1 Piece(s)	735102
6 m connecting rod	ECC-groove	1 Piece(s)	334665

Roto Clip

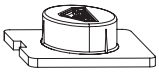

Roto Clip for free holes in connecting rods	100 Piece(s)	331288

6.4.2 [16] SEC connector

for SEC CL corner drive, SEC espagnolette protection, SEC flush-encased gearbox

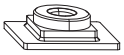

SEC connector	For SEC flush-encased gearbox	100 Piece(s)	447113

6.4.3 [37] SEC rebate-clearance reduction CD

for corner drive, on the locking side, top

SEC rebate-clearance reduction CD	50 Piece(s)	447112

6.4.4 Reducing sleeve

Adapting mount Ø 6 mm to mount Ø 10 mm

Reducing sleeve from Ø 6 to Ø 10 mm	100 Piece(s)	334352

6.4.5 Screws

6.4.5.1 Countersunk screws

[13] Countersunk screw ST4.8 x 16; special head

for fixing connecting-link, pivot rest, compl.

Countersunk screw	ST4,8x16	100 Piece(s)	728933

[17] Countersunk screw M5 x 7

for CL SEC corner drive

Countersunk screw	M5x7	100 Piece(s)	728928

[21] Countersunk screw M5 x 8

for stay hinge, compl.

Countersunk screw	M5x8	100 Piece(s)	728929

[18] Countersunk screw M5 x 9

for corner hinge

Countersunk screw	M5x9	100 Piece(s)	728930

[30] Countersunk screw M5 x 10

for SEC espagnolette protection

Countersunk screw	M5x10	100 Piece(s)	728926

Countersunk screw M5 x 30

for securing the handle in the flush-encased gearbox

Countersunk screw	M5x30	100 Piece(s)	212501

6.4.5.2 Cylinder screws

Cylinder screw M5 x 8

for SEC flush-encased gearbox

Cylinder screw	M5x8	100 Piece(s)	728936

[9] Cylinder screw M5 x 12

for T connector

Cylinder screw	M5x12	100 Piece(s)	728925

7 Large packaging for sets

7.1 Locking components

7.1.1 Tilt-Only hardware

TiSt Tilt-Only stay arm set

for TiSt | 130 kg

		№
V.01	20 Piece(s)	728862
V.02	20 Piece(s)	728863

Contents:

Figure	Quantity	Description
	1	[61] Tilt-Only stay arm, compl.
	1	[62] Slide bar, compl.

TiSs Tilt-Only stay arm set

for TiSs (all) and TiSt | 200 kg

		№
V.01	20 Piece(s)	728864
V.02	20 Piece(s)	728865

Contents:

Figure	Quantity	Description
	2	[61] Tilt-Only stay arm, compl.
	2	[62] Slider, compl.
	2	[63] Stop, compl.
	4	[24] Countersunk screw ST4.8 x 16 (not sh.)

Coupler component set

			№
Coupler component set	For coupling a connecting rod	100 Piece(s)	728856

Contents:

Figure	Quantity	Description
	2	[16] SEC connector
	1	[67] SEC coupler component, plate
	2	[68] Washer
	2	[69] Cylinder screw M5 x 6 (not sh.)

7.1.2 Floating-mullion hardware

[*] Multi-ported striker set

for FM-Su and FM-R

		№
VB 1/2	20 Piece(s)	728912
VB 3/4	20 Piece(s)	728913
VB 5/6	20 Piece(s)	728914

Contents:

Figure	Quantity	Description
	1	[2a] Multi-ported striker bottom part
	1	[2b] Multi-ported striker top part

7.2 Hinge side

7.2.1 Tilt&Turn / TiltFirst hardware

Small parts set

for S.kg ≤ 130 kg

		№
Small parts set	100 Piece(s)	728968

Contents:

Figure	Quantity	Description
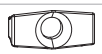	1	Fixing connecting-link | 130 kg
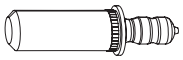	1	Pivot-rest pin
	1	Corner hinge end cap
	1	Pivot rest end cap
	1	Clampable corner bracket
Not sh.	2	Countersunk screw M5 x 8
Not sh.	2	Countersunk screw M5 x 9
Not sh.	1	Countersunk screw ST4.8 x 16

7.2.2 Turn-Only hardware

T-O-C hinge side set | 130 kg

SH ≤ 2700 mm (> 2400 mm: [13] Countersunk screw ST4.8 x 16; special head, order as an additional means of securing the pivot rest)

INFO

For SH ≥ 1300 mm, the following options are available as a central hinge:

- [70] T-O-C central hinge | 160 kg
- CL sash and frame component

				№
Clamp strip version 1	R01.5	Silver	10 Piece(s)	728745
	R05.4	Dark bronze	10 Piece(s)	728746
	R06.2	Jet black	10 Piece(s)	728747
	R07.2	Traffic white	10 Piece(s)	728748
	SF	Special colour	10 Piece(s)	728749
Clamp strip version 2	R01.5	Silver	10 Piece(s)	728750
	R05.4	Dark bronze	10 Piece(s)	728751
	R06.2	Jet black	10 Piece(s)	728752
	R07.2	Traffic white	10 Piece(s)	728753
	SF	Special colour	10 Piece(s)	740893
Clamp strip version 3	SF	Special colour	10 Piece(s)	728755

Contents:

Figure	Quantity	Description
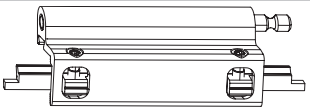	1	Stay bearing, compl. | 130 kg
	1	Turn-Only stay hinge, compl.
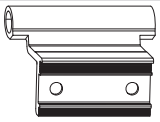	1	Corner hinge, compl. | 130 kg
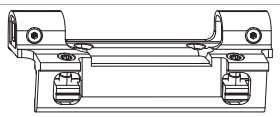	1	Pivot rest, compl. | 130 kg
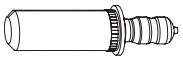	1	Pivot-rest pin
	1	Pivot rest end cap
	1	Corner hinge end cap
	1	Clampable corner bracket
Not sh.	2	Countersunk screw M5 x 9

T-O-C hinge side set | 130 kg

SH > 2700 mm ([13] Countersunk screw ST4.8 x 16; special head, order as an additional means of securing the pivot rest)

INFO

For SH ≥ 1300 mm, the following options are available as a central hinge:

- [70] T-O-C central hinge | 160 kg
- CL sash and frame component

					Nº
Clamp strip version 1	SF	Special colour	Left	10 Piece(s)	797616
	SF	Special colour	Right	10 Piece(s)	797615
Clamp strip version 2	SF	Special colour	Left	10 Piece(s)	797622
	SF	Special colour	Right	10 Piece(s)	797621

Contents:

Figure	Quantity	Description
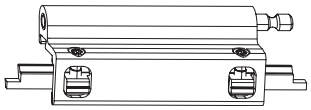	1	Stay bearing, compl. | 160 kg
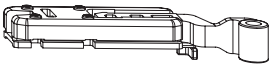	1	Turn-Only stay hinge, compl.
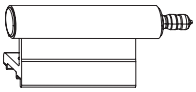	1	Corner hinge, compl. | 160 kg | reinforced
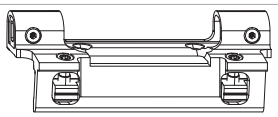	1	Pivot rest, compl. | 160 kg
	1	Pivot rest end cap

T-O small parts set

Except for T-O-C

		Nº
T-O small parts set	100 Piece(s)	728967

Contents:

Figure	Quantity	Description
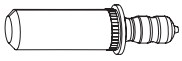	1	Pivot-rest pin
	1	Corner hinge end cap
	1	Pivot rest end cap
	1	Clampable corner bracket
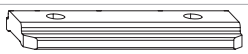	1	Clamping support-strip
Not sh.	4	Countersunk screw M5 x 9

T-O-C small parts set

T-O-C small parts set	100 Piece(s)	740891

Contents:

Figure	Quantity	Description
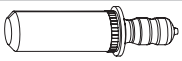	1	Pivot-rest pin
	1	Corner hinge end cap
	1	Pivot rest end cap
	1	Clampable corner bracket
Not sh.	4	Countersunk screw M5 x 9

7.3 Espagnolette and connector

7.3.1 Flush-encased gearbox

[8a] SEC flush-encased gearbox set

SEC flush-encased gearbox set	10 Piece(s)	728947

Contents:

Figure	Quantity	Description
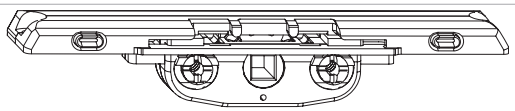	1	SEC flush-encased gearbox without blocking device
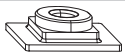	2	SEC connector
Not sh.	2	Cylinder-head screw M5 x 8
	1	SEC drilling protection
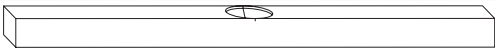	1	SEC rebate-clearance reduction flush-encased gearbox
Not sh.	1	Countersunk screw ST4.8 x 16

7.3.2 Floating-mullion espagnolette

for FM, couplable

FM SEC espagnolette set

Can be used in RC tests depending on the profile.

INFO
Note the profile system assessment.

		№
FM SEC espagnolette set	1 Piece(s)	764284

Contents:

Figure	Quantity	Description
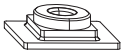	2	SEC connector
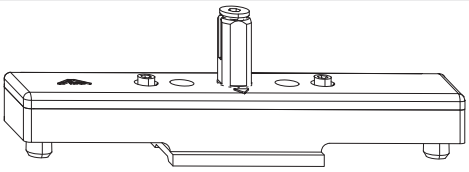	1	FM espagnolette, internal
	1	Operating lever, routed
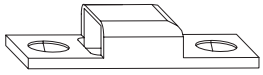	1	SEC locking
	2	Reducing sleeve
Not sh.	2	Countersunk screw M5 x 7

7.4 Accessories

7.4.1 Turn restrictor

Turn restrictor set, braked

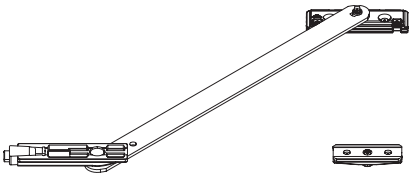

			№
Clampable	V.01	10 Piece(s)	728809
	V.02	10 Piece(s)	728810
Screw-on	V.01 V.02	10 Piece(s)	728808

Contents:

Figure	Quantity	Description
Not sh.	1	Rotating arm, cpl.
Not sh.	1	Stop
Not sh.	1	Bearing, compl.

Turn restrictor set, braked, damped

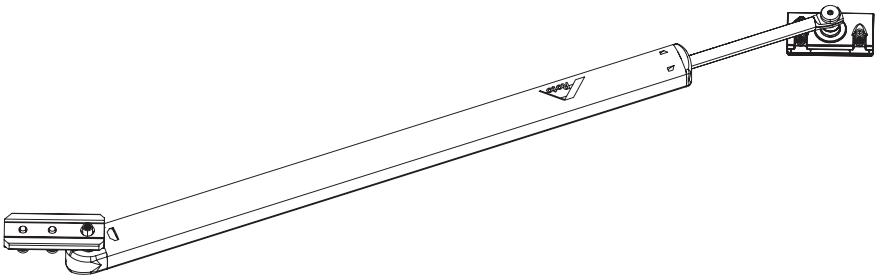

				№
Clampable	Size 1	V.01	10 Piece(s)	774487
		V.02	10 Piece(s)	774484
	Size 2	V.01	10 Piece(s)	774495
		V.02	10 Piece(s)	774496

Contents:

Figure	Quantity	Description
Not sh.	1	Turn restrictor, compl.
Not sh.	1	Mushroom-head thread
Not sh.	1	Frame bearing, compl.

7.4.2 Turn locks

Turn lock set

R01.1	Natural silver	20 Piece(s)	728815
R01.5	Silver	20 Piece(s)	728816
R05.4	Dark bronze	20 Piece(s)	728817
R07.1	Pure white	20 Piece(s)	728818
R07.2	Traffic white	20 Piece(s)	728819
SF	Special colour	20 Piece(s)	728820

Contents:

Figure	Quantity	Description
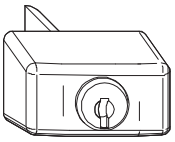	1	Turn lock, compl. with cylinder lock
	1	Key
Not sh.	2	Cylinder screw M5 x 12

Set of keys

Key set with ring	10 Piece(s)	208248

Contents:

Figure	Quantity	Description
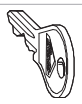	2	Key
Not sh.	1	Key ring

Locking plate set

Locking plate set	100 Piece(s)	728916

Contents:

Figure	Quantity	Description
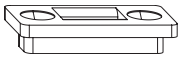	1	Locking plate
Not sh.	2	Countersunk screw ST4.8 x 16

Upgrade set

for turn lock

Upgrade set for turn lock	10 Piece(s)	684284

Contents:

Figure	Quantity	Description
	1	Locking plate
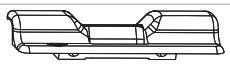	1	Multi-ported striker, compl.

7.4.3 Bullet catch

Bullet-catch set

for floating-mullion elements, second opening sash

Bullet catch set	10 Piece(s)	728924

Contents:

Figure	Quantity	Description
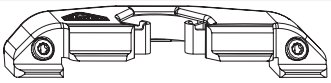	1	Bullet catch, compl.
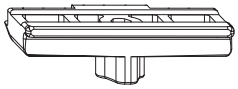	1	Bullet-catch cam, compl.

Balcony door bullet catch set

Balcony door bullet catch set	10 Piece(s)	728714

Contents:

Figure	Quantity	Description
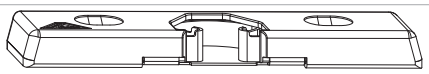	1	Balcony door bullet catch
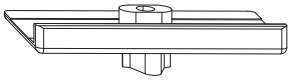	1	Balcony door bullet-catch cam
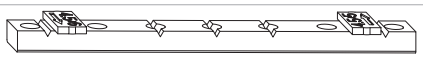	1	Packer
Not sh.	3	Self-tapping screw ST3.9 x 25
Not sh.	1	Installation instructions

7.4.4 Night vent

Night-vent set

Night vent set	10 Piece(s)	728958

Contents:

Figure	Quantity	Description
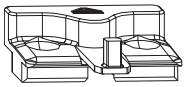	1	Night vent
	1	Night vent locking cam
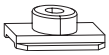	1	Coupler component
Not sh.	1	Countersunk screw M5 x 10
Not sh.	2	Self-tapping screw ST3.9 x 25

Night-vent set for T&T additional stay arm | 130 kg

Night vent set for T&T additional stay arm 130 kg	10 Piece(s)	810364

Contents:

Figure	Quantity	Description
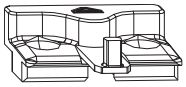	1	Night vent
	1	Night vent locking cam
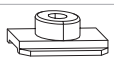	1	Coupler component
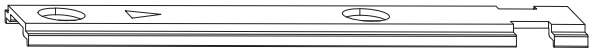	1	Connecting rod
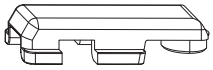	1	Additional stay arm coupler component
Not sh.	1	Countersunk screw M5 x 10
Not sh.	2	Self-tapping screw ST3.9 x 25

7.4.5 Screws

7.4.5.1 Rivet nut set

Application range: thread engagement ≤ 6 mm → *from page 295*

		№
Rivet nut set, metric	10 Piece(s)	793407

Contents:

Figure	Quantity	Description
	1	Rivet nut M5 x 12
Not sh.	1	Countersunk screw M5 x 16

8 Installation

8.1 Processing instructions

Maximum sash sizes and weights

The specifications, application diagrams and component assignments which can be found in the hardware manufacturer's product-specific documents provide information on the maximum permitted sash sizes and weights. The component with the lowest permitted load bearing capacity determines the maximum permitted sash weight.

- Before using electronic data records and implementing them in window construction programs in particular, check that they match the specifications, application diagrams and component assignments.
- Never exceed the maximum permitted sash sizes and weights. If any points are unclear, contact the hardware manufacturer.

Specifications from profile manufacturers

The window and balcony door manufacturer must comply with all specified system dimensions (e.g. gasket gap dimensions or locking distances).

They must continue to ensure and check this on a regular basis, especially when new hardware components are used for the first time, during production and on a continuous basis, up to and including window installation.

INFO
The hardware components are always designed in such a way that any system dimensions affected by the hardware can be adjusted. The hardware manufacturer shall not be liable for any additional expenses incurred if a deviation from these dimensions is not discovered until after the windows have been installed.

Combining hardware

Burglar inhibiting windows and balcony doors need hardware which meets special requirements.

Windows and balcony doors for wet rooms and those for use in environments with aggressive, corrosive constituents in the air require hardware that meets special requirements.

The resistance of windows and balcony doors to wind loads when they are closed and locked depends on the individual design of the windows and balcony doors. The hardware system is capable of handling wind loads specified by legislation and standards (for example in accordance with EN 12210 – especially test pressure P3).

In general, the Turn-Only and Tilt&Turn hardware components defined in this document are capable of meeting statutory and normative requirements for accessible dwellings.

Coordinate suitable hardware combinations and installation procedures in windows and balcony doors with the hardware manufacturer and profile manufacturer for the areas listed above, and conclude a separate agreement for them.

INFO
The hardware manufacturer's specifications on the combination of hardware (e.g. the use of additional scissor stays, the design of hardware for burglar-inhibiting window sashes and balcony door sashes, etc.) are binding.

8.2 Screw connections

DANGER

Incorrectly installed or screwed-in hardware components present a risk of death.

Incorrectly installed and screwed-in hardware components may lead to hazardous situations and cause serious or fatal accidents.

- During installation and screwdriving work, observe the specifications provided by the profile manufacturer; contact the profile manufacturer if necessary.
- Use the recommended screws.
- Select the length of the screws according to the profiles used.
- Ensure that the hardware components are adequately secured; contact the screw manufacturer if necessary.

ATTENTION

Using incorrect screw material may cause property damage.

Using the wrong screws may damage the components.

- Only use galvanised zinc-plated and passivated steel screws.
- Use screws with additional sealing in more challenging climatic conditions.
- Use stainless-steel screws on stainless-steel components only.
- For aluminium components, use screws made of steel (coated with zinc-nickel or zinc flakes) or stainless steel.

ATTENTION

Improper screw fixings may cause property damage.

Improper screw fixings may damage the components and the element as a whole, and stop them from working properly.

- Unless stated otherwise, turn screws in straight.
- Tighten screw heads until they are flush with the surface.
- Do not over-tighten screws. Note the torque. Choose a torque that will not deform the hardware and profile. Define profile-specific torques on the basis of the demo assembly.
- Use the recommended screws.
- Select the length of the screws according to the profiles used.

Fasten hardware components with the screws supplied. Observe the screwdriving specifications while doing so → *from page 291*.

8.2.1 Screw fixing specifications for aluminium profiles

WARNING

Incorrect screw connections may pose a risk of death!

Hardware components can be pulled out of the profile if they are not screwed down correctly.

- Select the length of the screws so that they will hold in the aluminium profile.
  If necessary, insert additional aluminium profiles or use rivet nuts.

INFO

Without examining the corner connectors used, Roto is unable to make any statements about the suitable fastening options.

Components	Components	Size	Quantity	d_k	Diameter to be drilled	Drive
CD hinge | 80 or 100 kg	Self-tapping screw	ST4.8 x 25	2	9.3	3.9	T25
	Alternatively: self-drilling screw	ST4.8 x 28	2	9.3	3.9	T25
CL sash component	Threaded pin	–	–	–	–	T10
Tilt-Only stay arm slide bar						
CL frame component						

The type and quality of the screw fixing always depend on the aluminium profile used by the profile manufacturer and must be inspected before use (system assessment).

Other AL hardware components are usually fastened to the frame and sash by clamping. Specific tightening torques apply during installation. Please note the relevant information on this in the chapter entitled “Installation”.

Installing the bearing in solid material

Grease countersunk screws ST4.8 x ..., which are used to fasten bearings in solid material, around the tip of the thread before screwing them in.

Screw fixings with piercing screws

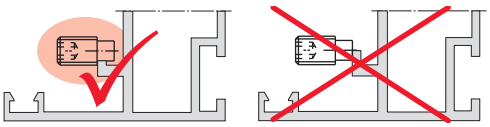

Screw head specifications for accessible components

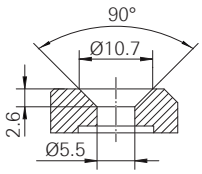

INFO

Select screws on the basis of the threshold structure. Observe the specifications on selecting the screw head while doing so. Countersink the screw head completely.

8.3 Preparing for installation

8.3.1 Preparing the connecting rods

Cropping

INFO
All connecting rod dimensions refer to an overlap width of 22 mm.
If the overlap width differs from this, adapt the connecting rod dimensions accordingly.
All connecting rod dimensions T ±0.5 mm.

1. For the length of the connecting rods, see the installation drawing. → *from page 419*
2. Mark the length on the connecting rods.
3. Crop the connecting rods.

Drilling

General dimensioning of all coupling points (except for the floating mullion), unless otherwise specified.

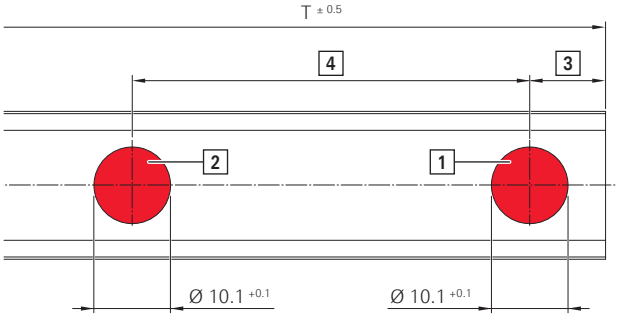

Position	Description
[1]	Drill hole for coupling point / cam
[2]	Drill hole for cam / TF tilt lock bolt
[3]	Distance dimension from outside = 10 mm Except for CR4 and CR5 with RC 3: 50 mm
[4]	Distance dimension to the next cam / TF tilt lock bolt

Dimensioning of the floating-mullion espagnolette coupling points (except for FM-SuN), unless otherwise specified.

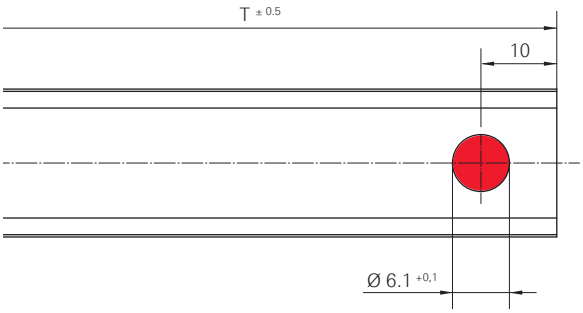

Dimensioning of the FM-SuN espagnolette coupling points, unless otherwise specified.

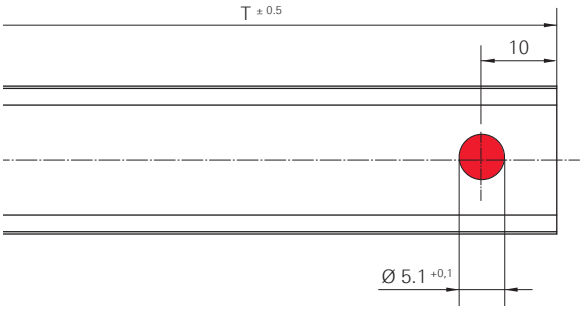

INFO
Connecting rods from the Roto product range cannot be used. Narrower connecting rods are required.

1. For the position of the coupling points, cams and TF tilt lock bolt in connecting rods, see the installation drawing.
   → *from page 419*

2. Drill holes.

8.3.2 Opening the sash corners

1. Open the connecting rod groove at all sash corners.

Position	Description
[1]	Connecting rod groove opening
[2]	Alternative connecting rod groove opening

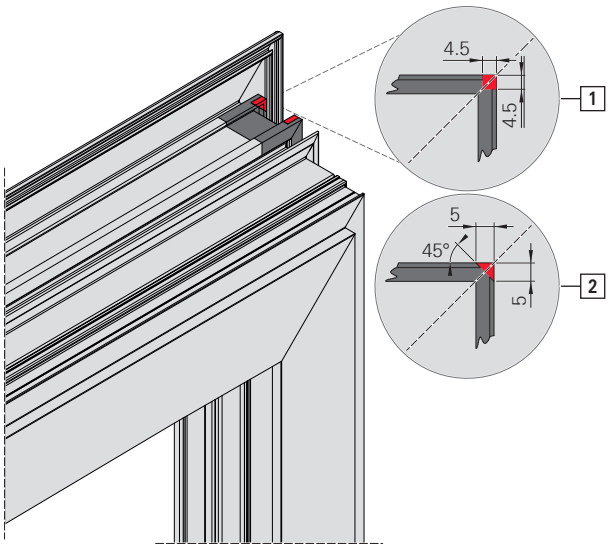

2. Deburr the edges.

8.3.3 CL corner drive – ECC-groove

Placing supports under the CL corner drive – ECC-groove

1. When the CL corner drive is used in a profile with extended connecting rod groove (ECC), use a profile-related (X) bracket as a support [1].

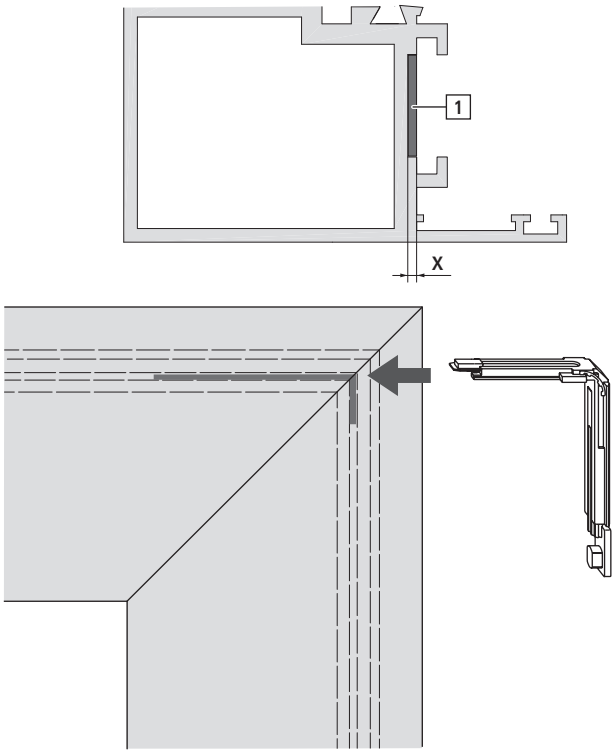

8.3.4 Rivet nuts

A preliminary system assessment is required to ensure that the rivet nuts are sufficiently secured in the profile.

The following information is a recommendation for installing the bearings.

Inserting the rivet nuts

1. If the required thread engagement [1] cannot be achieved, use rivet nuts [2] as an alternative.

   Torque: 2 - 2.5 Nm

Thread engagement [1] of self-tapping screws:	
In the frame	**In the sash**
130 kg ≥ 6 mm	130 kg ≥ 6 mm
160 kg ≥ 6 mm	160 kg ≥ 6 mm
200 kg ≥ 8 mm	200 kg ≥ 10 mm
300 kg ≥ 10 mm	300 kg ≥ 10 mm

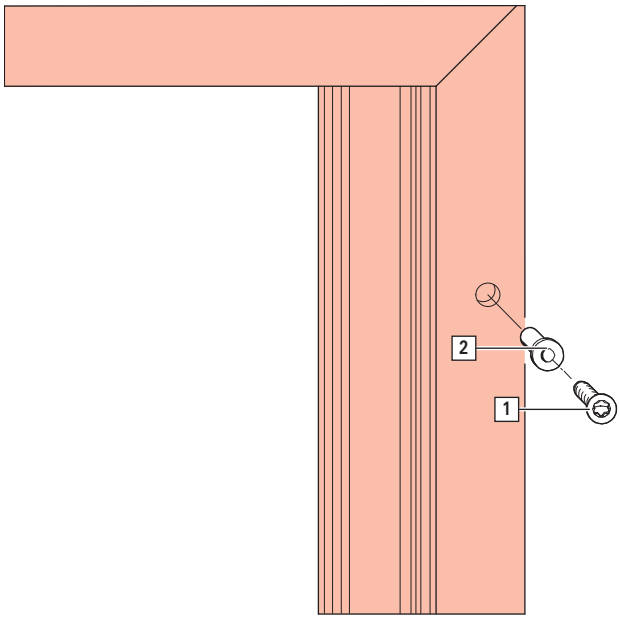

INFO

Without examining the corner connectors to be used, Roto is unable to make any binding statements on the use of the hinge sides.

8.3.5 Cutting gaskets to size

1. Cut out gaskets on the overlap.

Weight	Opening type	A	B	C	D	E	F[32]
50 kg	T-O-B	–	–	150^{+1}	150^{+1}	95^{+2}	> 3.5
70 kg	T-O-B	–	–	100^{+1}	100^{+1}	95^{+2}	> 3.5
80 kg	T-O-B	– –	–	170^{+1}	170^{+1}	115^{+2}	> 3.5
T-O-B | 100 kg	T-O-B	–	–	180^{+1}	180^{+1}	140^{+2}	> 3.5
130 kg	T&T, TF, T-O, TiSt, TiSs	–	–	115^{+1}	115^{+1}	115^{+2}	> 3.5
160 kg	T&T, TF, T-O	–	–	115^{+1}	115^{+1}	115^{+2}	> 5
200 kg	T&T, TF, T-O	11^{+1}	–	194^{+1}	154^{+1}	181^{+2}	> 7
300 kg	T-O	39^{+1}	39^{+1}	243^{+1}	214^{+1}	234^{+2}	> 8

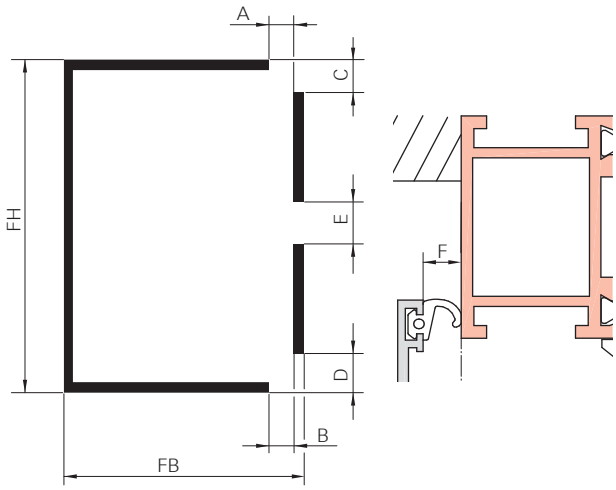

[32] Required hinge passage

8.3.6 Connecting the coupling points

INFO
Prepared connecting rods always have coupling points.

Joining the connecting rods

1. Use the SEC coupler component [1] at the coupling point on a connecting rod [2].

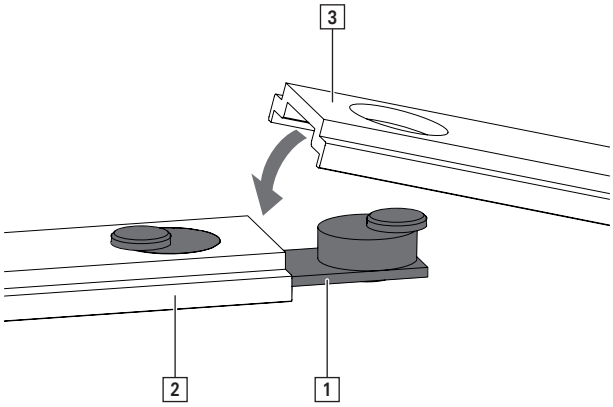

2. Connect the unit to another connecting rod [3] at the coupling point.

Connecting the corner drive to the connecting rod

1. Connect the corner drive [1] at the coupling point on the connecting rod [2].

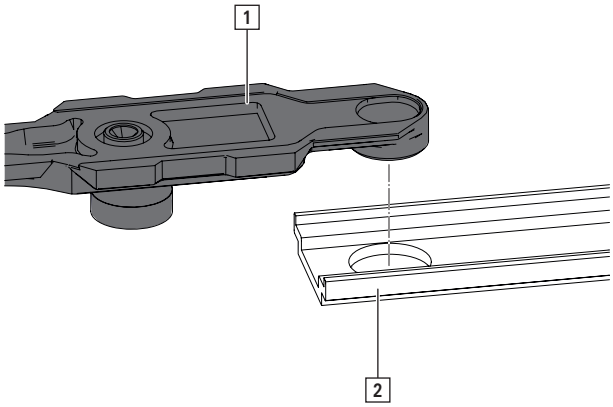

8.4 General installation

8.4.1 Sash

8.4.1.1 Installation sequence

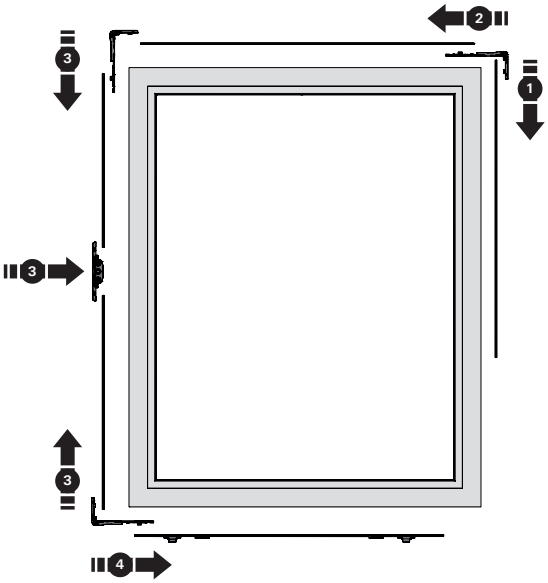

[1] Connecting rod on the hinge side
[2] Horizontal top connecting rods and components
[3] Connecting rods and espagnolette on the locking side
[4] Horizontal bottom connecting rod and components

Observing the installation sequence

1. Open the sash corners → *from page 293*.
2. Crop and drill into the connecting rods → *from page 292*.
3. Install the insertable cam → *from page 302*.
4. Install the connecting rod on the hinge side .
5. Install the horizontal top connecting rods and components .
6. Install the connecting rods and espagnolette on the locking side .
7. Install the horizontal bottom connecting rod and components .
8. Install the handle → *from page 409*.

8.4.1.2 T connector

Installing the T connector

1. When using the centre lock, break the lower horizontal T connector in the centre and insert it from above or below.

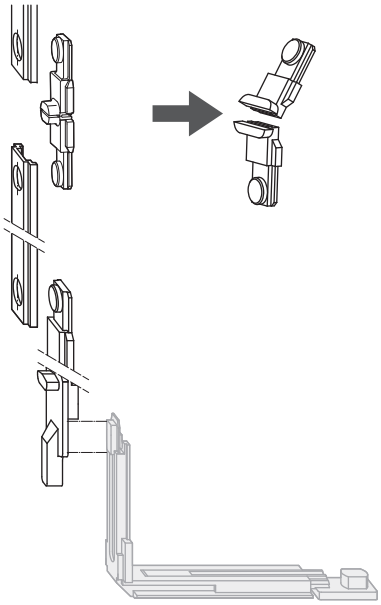

8.4.1.3 Connector bolt, insertable

for Roto Line AL geared-handle

Installing the connector bolt, insertable

INFO
Comply with the installation sequence for the aluminium sash. → *from page 297*

1. For the position of the connector bolt, see the installation drawings → *from page 419*.

2. Connecting the corner drive to the connecting rod at the coupling point → *from page 304*

Install the cam → *from page 302*.

3. Insert the connector bolt [1] into the continuous connecting rod.

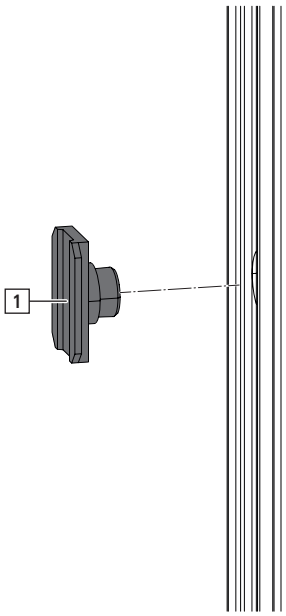

4. Insert everything jointly into the connecting rod groove from above on the locking side.

5. Fix the corner drive to the sash using the retaining fork → *from page 304*.

8.4.1.4 SEC espagnolette protection

for Roto Line AL lockable geared-handle

Installing the SEC espagnolette protection

⇨ The Roto Line AL geared-handle, lockable, is installed → *from page 409*.

INFO
Comply with the installation sequence for the aluminium sash. → *from page 297*

1. For the position of the SEC espagnolette protection, see the installation drawings → *from page 419*.

2. Install the Roto Line AL geared-handle, lockable, with espagnolette support → *from page 409*.

INFO
It is not possible to install the espagnolette support at a later point.

3. Screw down the SEC espagnolette protection onto the connecting rods as follows.

a. Insert the corner drive with connecting rod [1], SEC connector [2] and cam into the connecting rod groove from above on the locking side.
b. Insert the connecting rod [3], SEC connector [2] and cam into the connecting rod groove from below on the locking side.
c. Swing the SEC espagnolette protection [4] into the connecting rod groove on the locking side.
d. Fasten the SEC espagnolette protection on the connecting rods to the SEC connectors using screws.

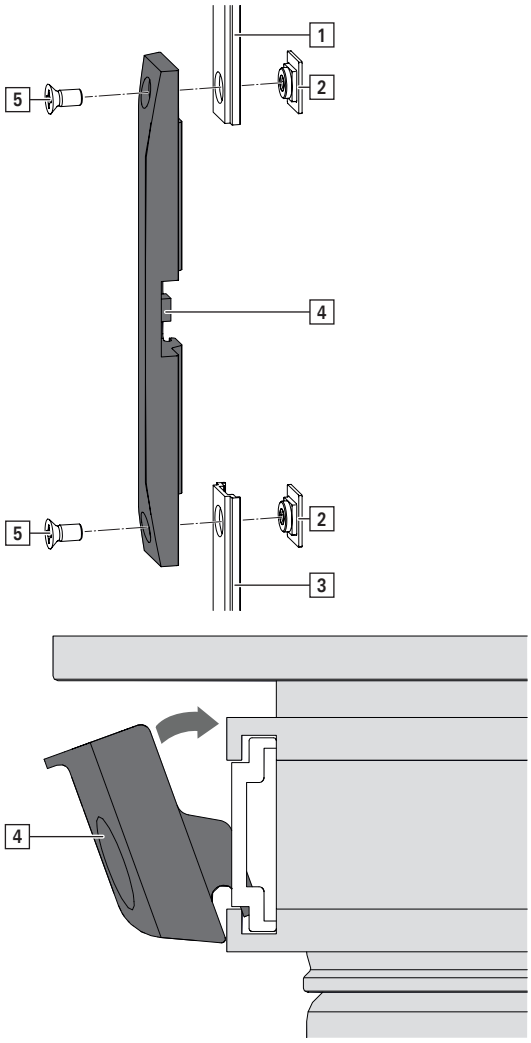

4. Fix the corner drive to the sash using the retaining fork → *from page 304*.

8.4.1.5 Flush-encased gearbox

Installing the flush-encased gearbox

1. For the position of the flush-encased gearbox, see the installation drawings. → *from page 419*

2. Place the flush-encased gearbox in the delivery state in the routing provided as shown.

INFO
Turn the clampable lug to secure the flush-encased gearbox for transport.

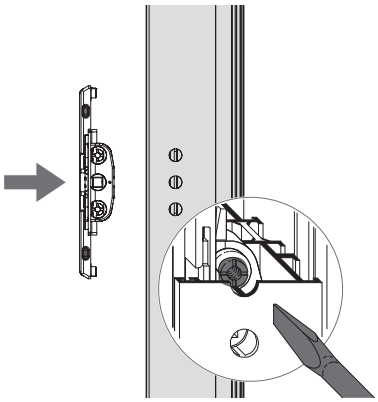

8.4.1.6 Cam, insertable

Installing the cam, insertable

INFO
Comply with the installation sequence for the aluminium sash. → *from page 297*

1. For the number and position of cams, see the installation drawings. → *from page 419*

2. Insert the cam [1] into the connecting rod [2].

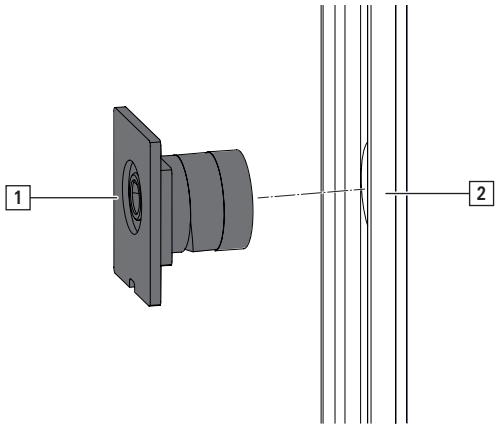

a. The recess [1] on the cam points away from the striker.

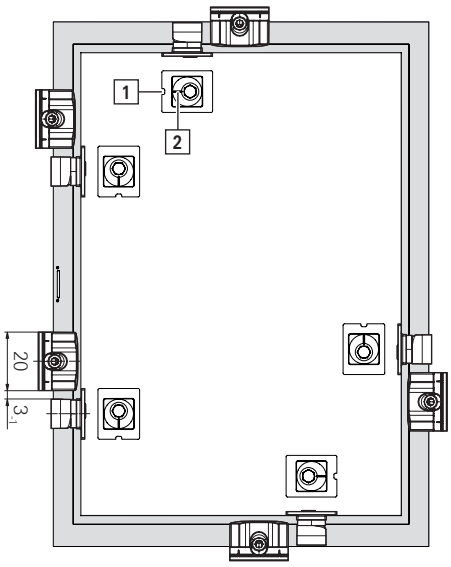

b. Adjust the marking [2] for adjusting the cam horizontally or vertically in relation to direction of travel.

   Note the type of connecting rod (standard / with extended connecting rod groove). → *10.1.1 "Cam, insertable" from page 492*

8.4.1.7 Cam, insertable – ECC-groove

Installing the cam, insertable – ECC-groove

INFO
Comply with the installation sequence for the aluminium sash. → *from page 297*

1. For the number and position of cams, see the installation drawings. → *from page 419*

2. Insert the cam [1] into the connecting rod [2].

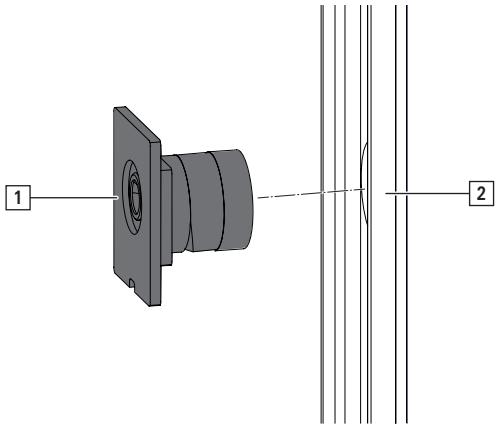

a. The recess [1] on the cam points towards the striker.

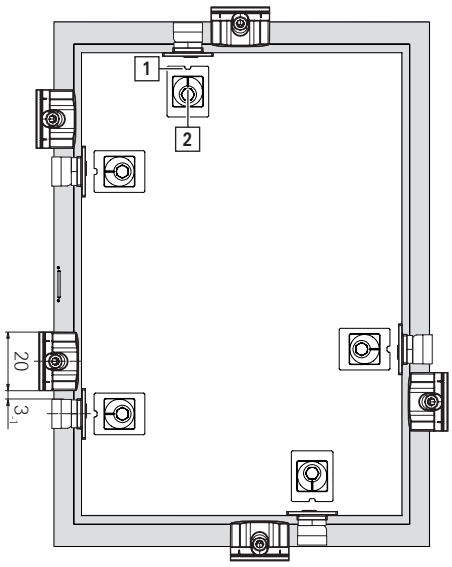

b. Adjust the marking [2] for adjusting the cam horizontally or vertically in relation to direction of travel.

   Note the type of connecting rod (standard / with extended connecting rod groove). → *10.1.1 "Cam, insertable" from page 492*

8.4.1.8 Corner drives

Installing the corner drives

⇨ Drill holes created in the handle → *from page 308*

⇨ Espagnolette cutout routed → *from page 308*

⇨ Sash corners opened → *from page 293*

⇨ Connecting rods prepared → *from page 292*

⇨ Cam installed → *from page 302*

INFO
Comply with the installation sequence for the aluminium sash. → *from page 297*

1. Connect the corner drive [1] to the connecting rod [2] and additional components at the coupling point.

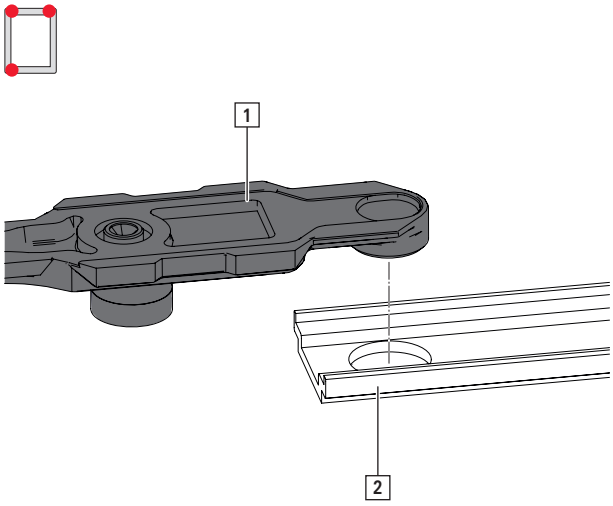

2. Insert everything jointly into the connecting rod groove.

3. Fix the corner drive to the sash using the retaining fork [1].

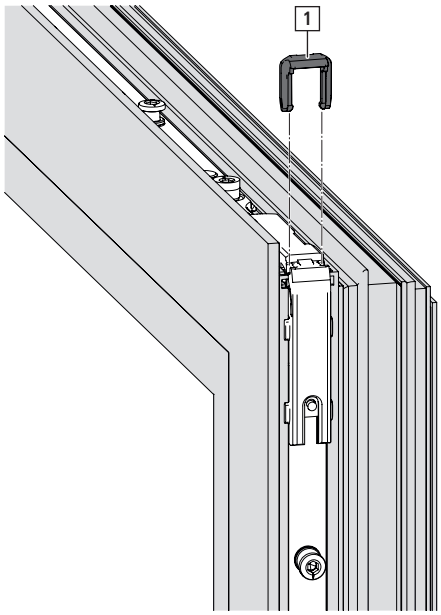

8.4.2 Frame

INFO
Install the frame components when the frame is horizontal (workshop).

Once the frame is fitted, the reveal may prevent frame components from being installed correctly.

8.4.2.1 Strikers

Position the strikers in accordance with the installation drawings or using positioning jigs → *from page 254*.

Striker positions in installation drawings correspond to cams in the turned, open position (T&T / T-O / FM) and tilted, open position (TF / TiS).

Test distance from striker to cam

- 3_{-1} mm in turned, open position (T&T[33] / T-O / FM) and tilted, open position (TiS)
- 20.5_{-1} mm in turned, open position (TF)

INFO
Check all dimensions during demo assembly prior to series production.

Installing standard strikers

1. Determine the striker position.

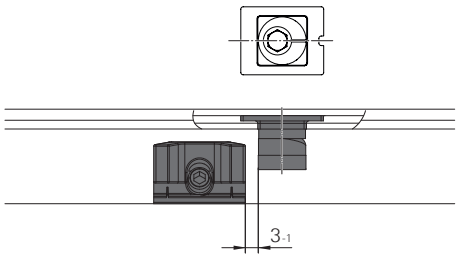

2. Fasten the striker with a threaded pin.
   Tool: T10 hexalobular socket
   Torque: 2 – 2.5 Nm
   Check that the striker is fitted securely.

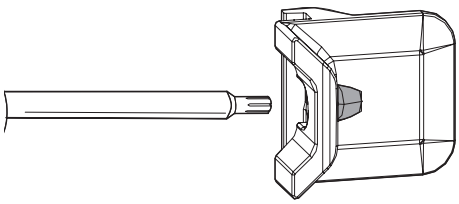

[33] T&T | accessible: align in the centre, see *Installing strikers (accessible)*

Installing standard strikers as centre locks

1. Place centre locks horizontally and vertically from SW or SH > 1300 mm.

   Depending on the profile stability and leaktightness requirements, the centre locks may have to be positioned at smaller sash widths and lower sash heights.

INFO
From 0.5 kN/m² wind load or SH > 1800 mm, place additional centre locks on the hinge side and locking side.

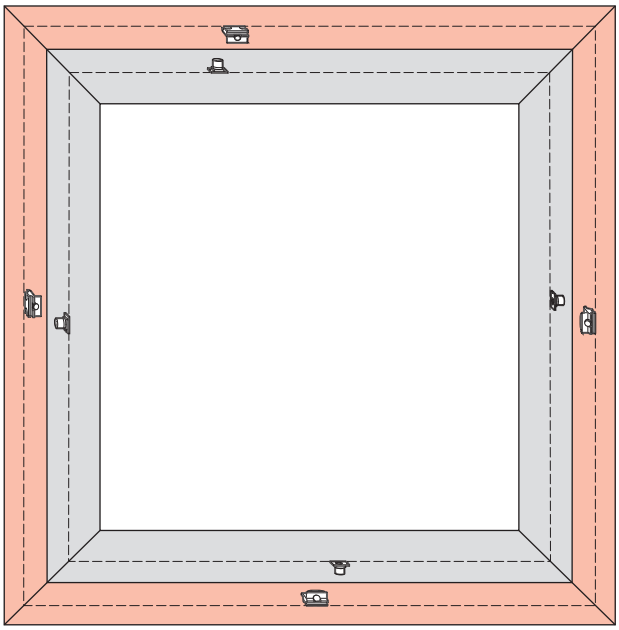

Installing SEC strikers

1. Determine the striker position.

INFO
Security locking points must not collide with standard locking points.

RC 2

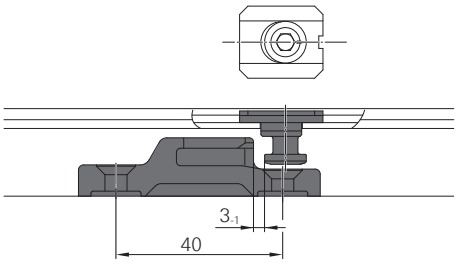

RC 3

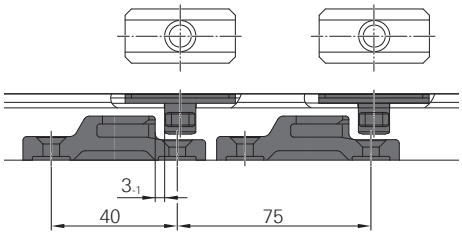

2. Fasten the SEC striker with two screws.
   Check that the striker is fitted securely.

INFO
It must be ensured that the SEC strikers are securely fitted (in accordance with RC classification) for security hardware.

Installing strikers (accessible)

1. Determine the striker position.
   Align the striker and cam in the centre.

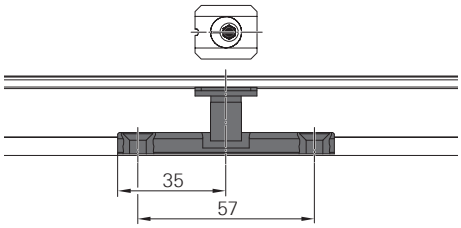

2. Fasten the striker with two screws.

INFO
Select screws on the basis of the threshold structure. Observe the specifications on selecting the screw head while doing so. Countersink the screw head completely.

Check that the striker is fitted securely.

8.4.2.2 SEC rebate-clearance reduction corner drive

Installing the SEC rebate-clearance reduction CD

1. Insert the SEC rebate-clearance reduction CD [1] into the frame [2].

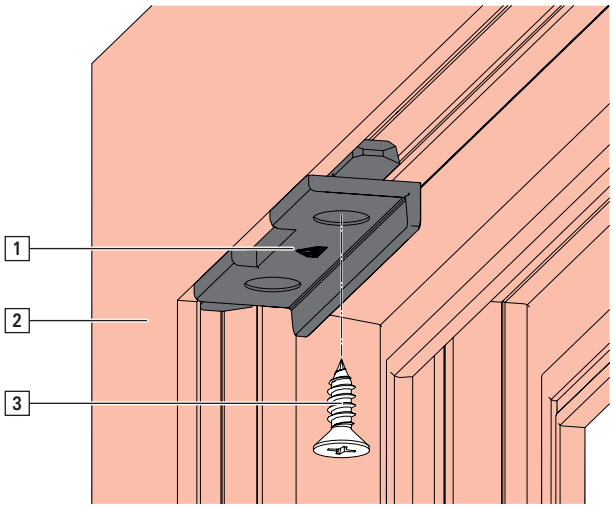

2. Push the SEC rebate-clearance reduction CD all the way into the corner and fasten with a screw [3].

8.5 Tilt&Turn / TiltFirst hardware

8.5.1 Drilling and routing dimensions

8.5.1.1 Stay bearing fixing connecting-link | 90 - 130 kg

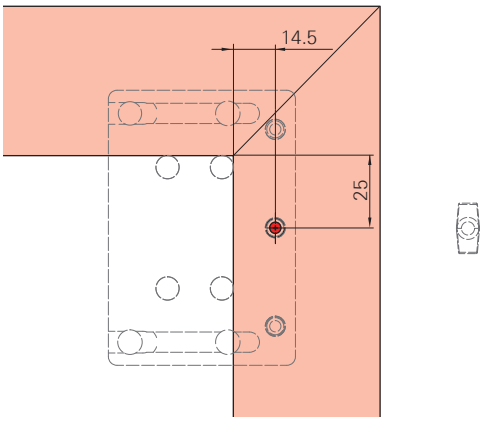

Place the drilling jig on the cams in the frame.

Drill the hole:

1 x Ø 3.9 mm, at least 14 mm deep.

INFO
In solid material, drill out a Ø 4.1 mm hole.
Screw-in depth → *from page 295*

8.5.1.2 Fixing connecting-links for stay bearing and counter bearing | 160 kg

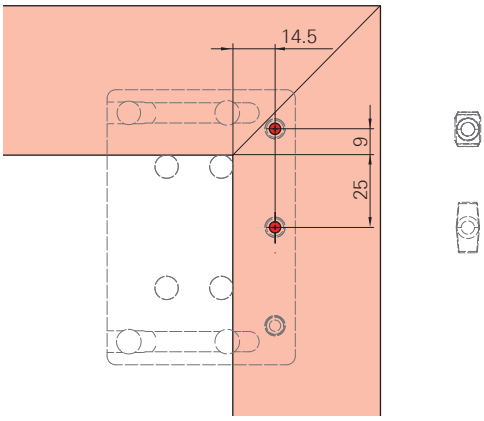

Place the drilling jig on the cams in the frame.

Drill holes:

2 x Ø 3.9 mm, at least 14 mm deep.

INFO
In solid material, drill out a Ø 4.1 mm hole.
Screw-in depth → *from page 295*

8.5.1.3 Stay bearing | 200 kg

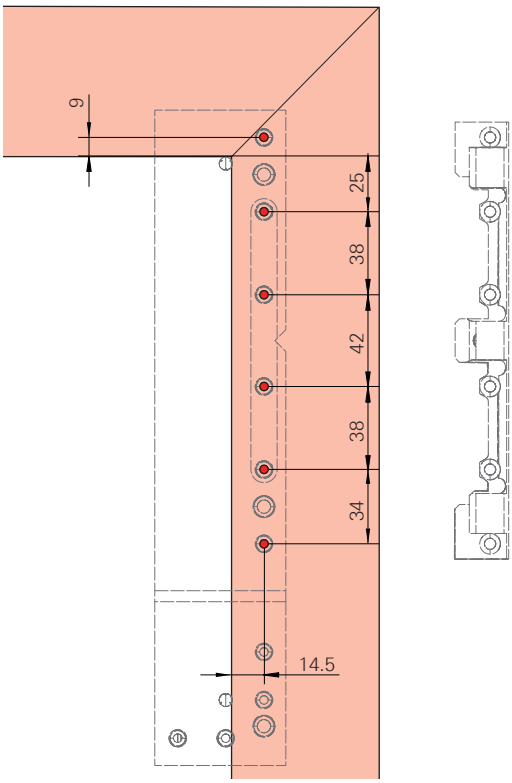

Place the drilling jig on the cams in the frame.

Drill holes:

6 x Ø 3.9 mm, at least 14 mm deep.

INFO
In solid material, drill out a Ø 4.1 mm hole.

Screw-in depth → *from page 295*

8.5.1.4 Pivot rest | 90 - 160 kg

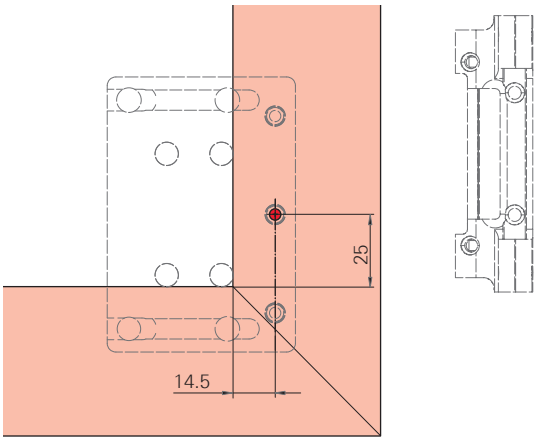

Place the drilling jig on the cams in the frame.

Drill the hole:

1 x Ø 3.9 mm, at least 14 mm deep.

INFO
In solid material, drill out a Ø 4.1 mm hole.

Screw-in depth → *from page 295*

INFO
- 90 - 130 kg:
  Pivot rest screw from SH > 2400 mm.
- > 130 kg:
  Always use a pivot rest screw.

8.5.1.5 Pivot rest | 200 kg

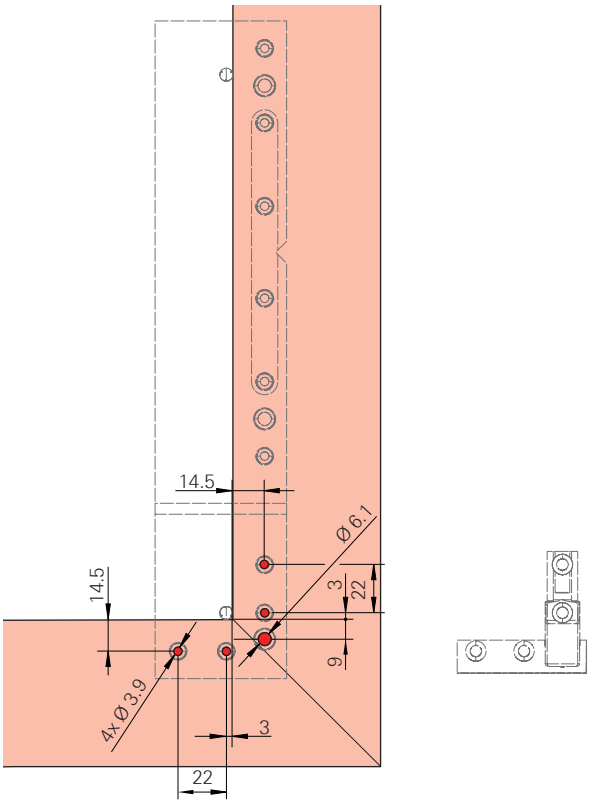

Place the drilling jig on the cams in the frame.

Drill holes:

4 x Ø 3.9 mm, at least 14 mm deep.

1 x Ø 6.1 mm, at least 7 mm deep.

INFO
In solid material, drill out a Ø 4.1 mm hole.
Screw-in depth → *from page 295*

8.5.1.6 TF additional stay arm | 90 - 130 kg

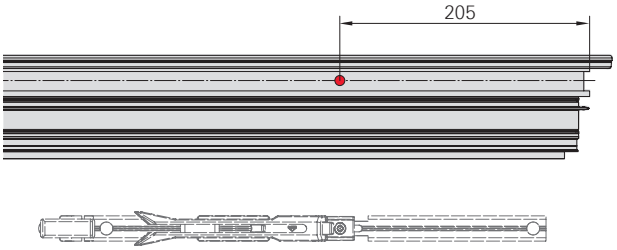

Drill the hole:

1 x Ø 5.1 mm, at least 14 mm deep.

8.5.2 Sash

8.5.2.1 Corner hinge | 90 - 130 kg

DANGER

Risk of death caused by using the wrong corner hinge!

The sash could fall out if a reinforced corner hinge has not been installed for SH > 2700 mm.

- Check to ensure that the correct corner hinge has been fitted (see figure).

Checking the corner hinge

1. Take the value for the corner hinge dimension X from the table and check the corner hinge.

SH	Description	X	HP
≤ 2700	Corner hinge	3.2	> 3.5
> 2700	Corner hinge, reinforced	4.2	> 5

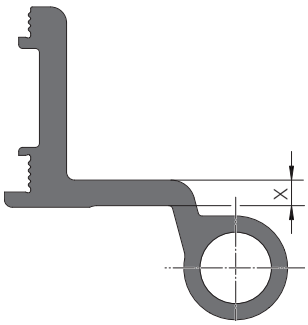

Installing the corner hinge

1. Insert the pivot-rest pin from below.

2. Slide the hinge, including preassembled clampable corner bracket, into the profile until the clampable corner bracket is resting on the base of the sash groove [A].

3. Push the hinge onto the profile so that it is level and fasten with screws [1].

   Tool: T25 hexalobular socket

   Torque: 3.5 – 5.0 Nm

   Check that the hinge is fitted securely.

INFO

- Do not leave a gap between the hinge and profile. The hinge must be positioned securely on the profile without any gaps.
- Do not damage the pin when tapping it in. Do not use a metal hammer.

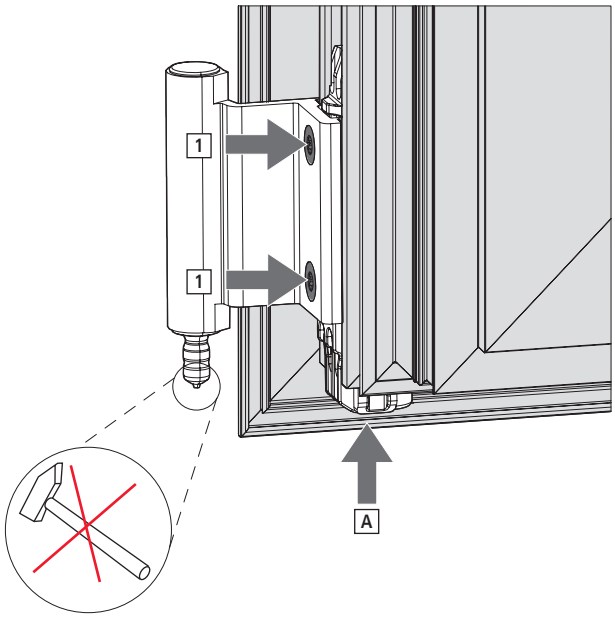

8.5.2.2 Corner hinge | 160 kg

Installing the corner hinge

1. Slide the hinge, including preassembled pivot-rest pin and clampable corner bracket, into the profile until the clampable corner bracket is resting on the base of the sash groove [A].

2. Push the hinge onto the profile so that it is level and fasten with screws [1].

   Tool: T25 hexalobular socket

   Torque: 3.5 – 5.0 Nm

   Check that the hinge is fitted securely.

INFO

Do not leave a gap between the hinge and profile. The hinge must be positioned securely on the profile without any gaps.

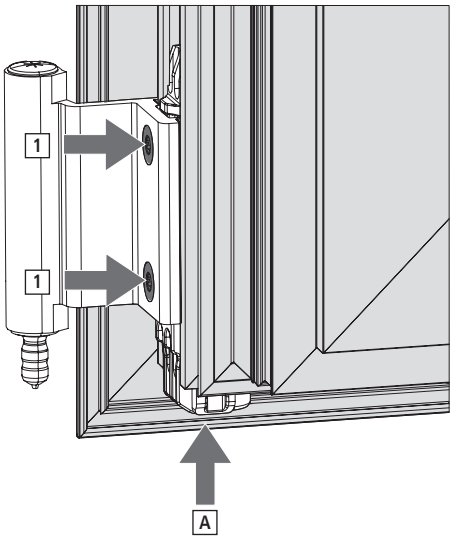

8.5.2.3 Corner hinge | 200 kg

Installing the corner hinge

1. Slide the hinge, including preassembled clampable corner bracket, into the profile until the slotted pin is resting on the base of the sash groove [A].

2. Push the hinge onto the profile so that it is level and fasten with screws [1].

   Tool: T25 hexalobular socket

   Torque: 3.5 – 5.0 Nm

   Check that the hinge is fitted securely.

INFO

- Do not leave a gap between the hinge and profile. The hinge must be positioned securely on the profile without any gaps.
- Do not damage the pin when tapping it in. Do not use a metal hammer.

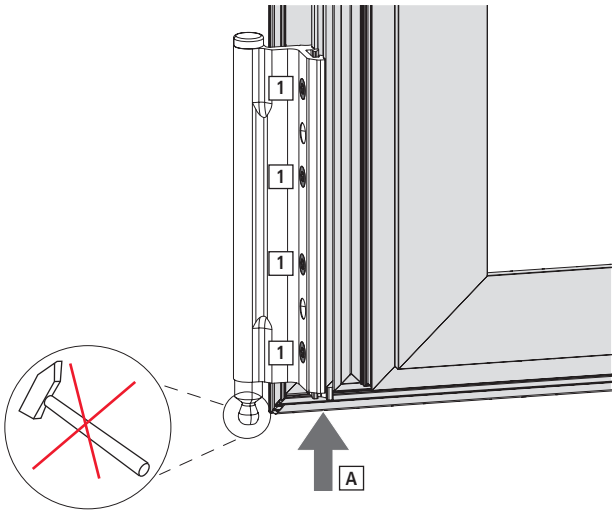

8.5.2.4 Stay hinge | 90 - 160 kg

Installing the stay hinge

1. Fasten the stay hinge [1] to the sash stay [3] using countersunk screws [2] with “green” threadlocker.

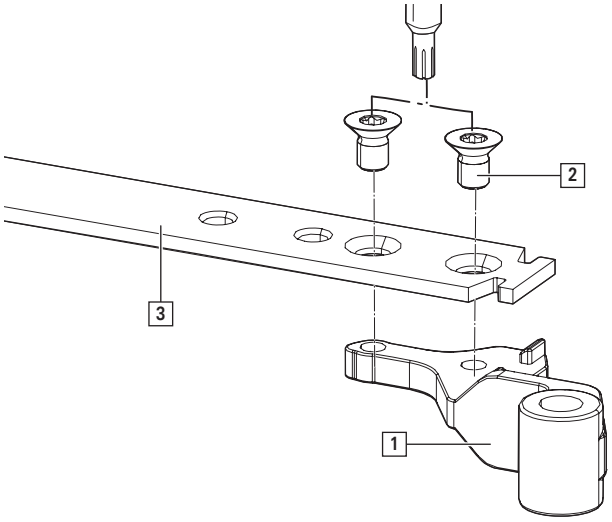

2. Tighten the countersunk screws.
   Tool: T25 hexalobular socket
   Torque: 3.5 – 5.0 Nm

INFO
Do not undo tightened screws.
If these have come undone, new screws must be used with “green” threadlocker.

8.5.2.5 Sash stay | 90 - 200 kg

INFO
Figures: installation of sash stay 600, SH ≥ 1300 mm.

Installing the sash stay

1. Insert connecting rod CR4 with components (see installation drawing → *9 “Installation drawings”*

from page 419) in the Euro-groove on the hinge side.

2. Link connecting rod CR3 and the CL corner drive to the sash stay and insert the entire assembly at the top, starting from the hinge side. Link connecting rod CR4 to the CL corner drive.

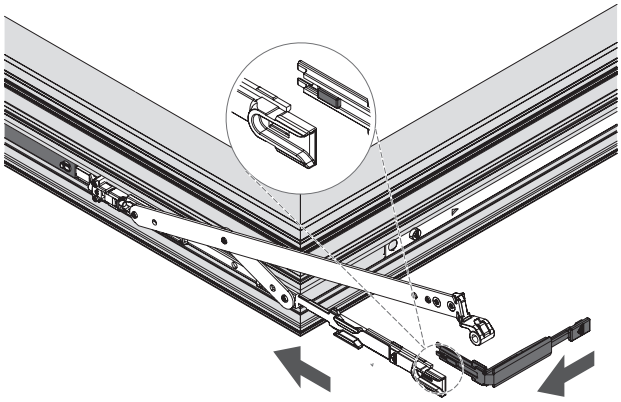

3. Secure the CL corner drive with the retaining fork.

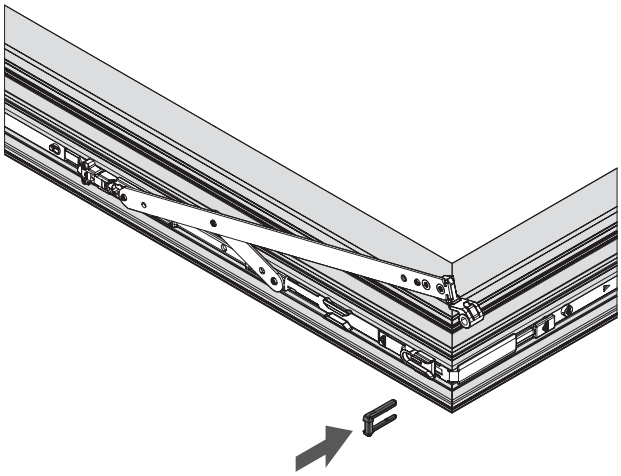

4. Prepare the jig for the sash stay by inserting the positioning pin into the corresponding drill hole (depending on the sash stay selected).

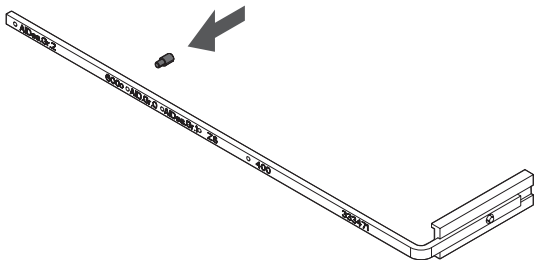

5. Position the jig on the Euro-groove so that it is level [A].

   Open the sash stay and insert the jig positioning pin into the sash stay hole provided [B].

   Secure the sash stay in position with piercing screws.

Sash stay	Piercing screw
400	[C]
600	[C]
620	[C]
640	[D]

   Tool: T10 hexalobular socket

   Torque: 2 – 2.5 Nm

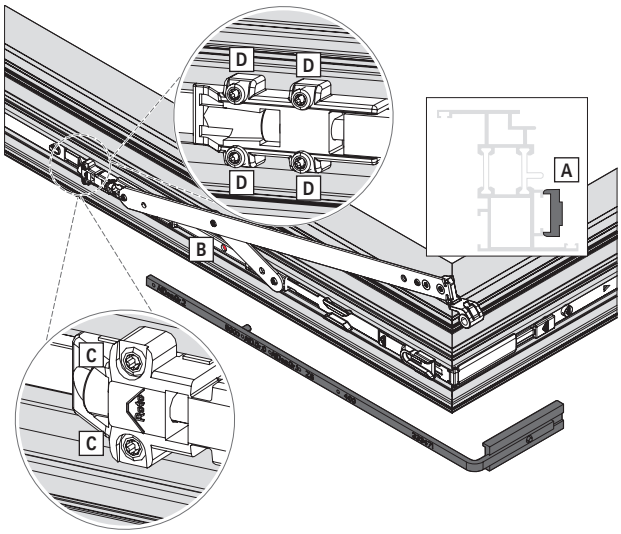

8.5.2.6 Additional stay arm | 90 - 160 kg

Installing the additional stay arm

1. Connect the scissor stay deadbolt [1] to the coupling rod [2].

   Insert the stop [3] into the scissor stay guide [4] as shown and place both on the coupling rod.

   INFO
   Omit the stop for 160 kg.

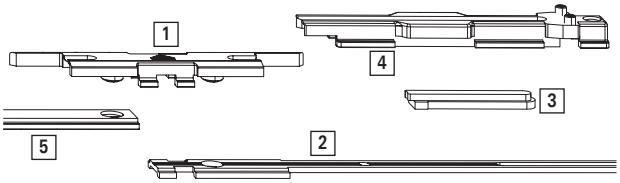

2. Connect the additional stay arm sash components to the connecting rod [5] and insert into the sash profile at the top, starting from the locking side.

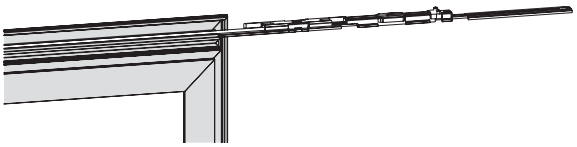

3. Connect the corner drive to the connecting rod and insert it from above into the sash groove on the locking side.

   Join with the coupling rod.

4. Fasten the scissor stay guide at the specified position (see installation drawing → *9 "Installation drawings" from page 419*) with two threaded pins [A].

   Tool: T10 hexalobular socket

   Torque: 2 – 2.5 Nm

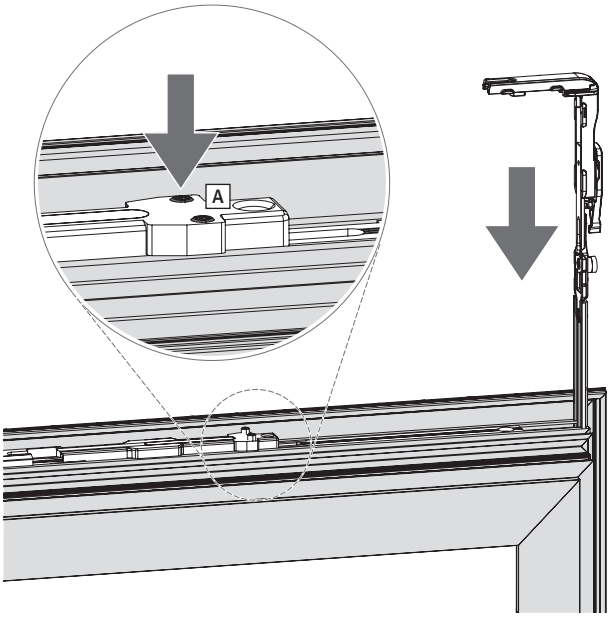

8.5.2.7 Additional stay arm | 200 kg

Installing the additional stay arm

1. Connect the scissor stay deadbolt [1] to the coupling rod [2].

   For a tilt distance of 160 mm: insert the stop [3] into the scissor stay guide [4] as shown.

   Position the scissor stay guide on the coupling rod.

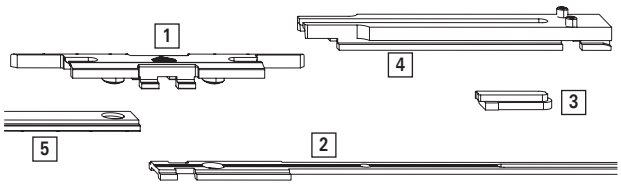

2. Connect the additional stay arm sash components to the connecting rod [5] and insert into the sash profile at the top, starting from the locking side.

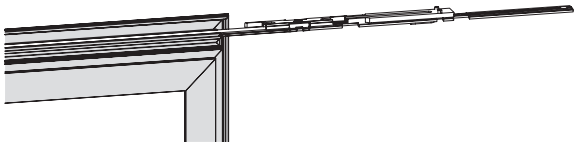

3. Connect the corner drive to the connecting rod and insert it from above into the sash groove on the locking side.

   Join with the coupling rod.

4. Fasten the scissor stay guide at the specified position (see installation drawing → *9 "Installation drawings" from page 419*) with two threaded pins [A].

   Tool: T10 hexalobular socket

   Torque: 2 – 2.5 Nm

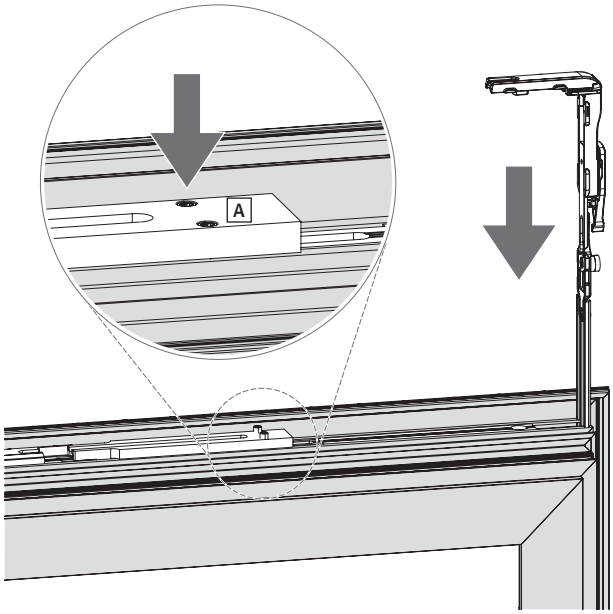

8.5.2.8 TF additional stay arm | 90 - 130 kg

Installing the additional stay arm

1. Connect the coupler component [1] to the coupling rod [2].

   Insert the stop [3] into the scissor stay guide [4] as shown and place both on the coupling rod.

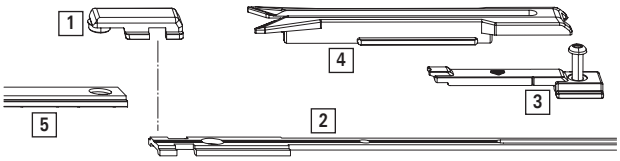

2. Connect the additional stay arm sash components to the connecting rod [5] and insert into the sash profile at the top, starting from the locking side.

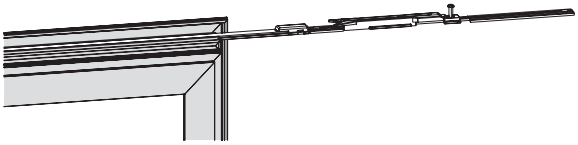

3. Connect the corner drive to the connecting rod and insert it from above into the sash groove on the locking side.

   Join with the coupling rod.

4. Secure the stop at the predrilled position with the screw [A].

   Tool: T25 hexalobular socket

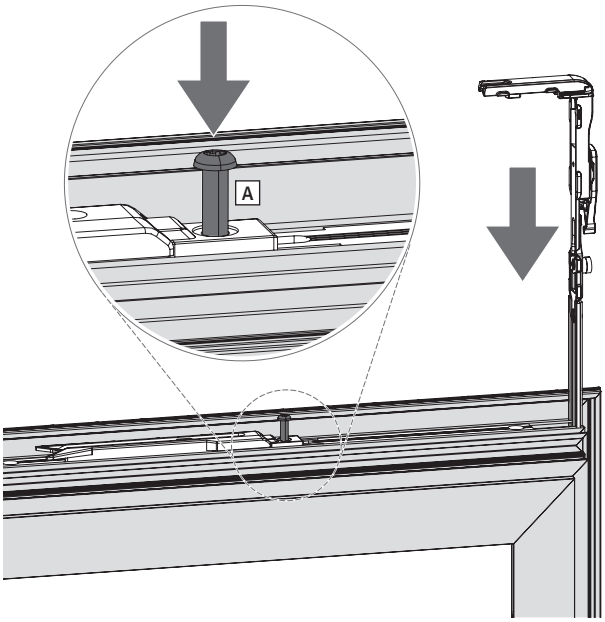

8.5.2.9 TF additional stay arm | 160 - 200 kg

Installing the additional stay arm

1. Connect the coupler component [1] to the coupling rod [2].

   Insert the stop [3] into the scissor stay guide [4] as shown and place both on the coupling rod.

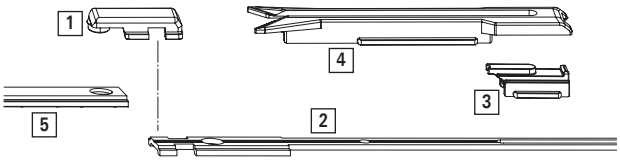

2. Connect the additional stay arm sash components to the connecting rod [5] and insert into the sash profile at the top, starting from the locking side.

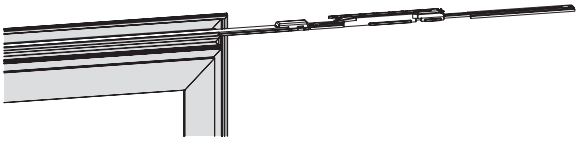

3. Connect the corner drive to the connecting rod and insert it from above into the sash groove on the locking side.

   Join with the coupling rod.

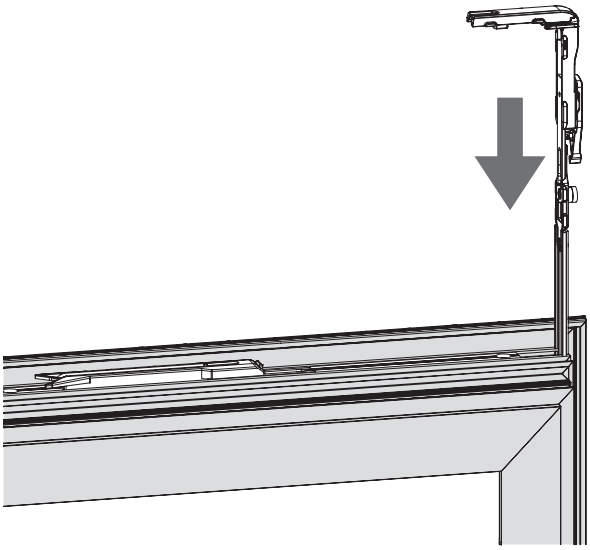

8.5.2.10 Sash lifter | 200 kg

Installing the sash lifter

1. Place the run-up block [1] on the coupler component [2]. Connect the coupler component to the connecting rod [3] and the corner drive for the sash lifter [4] and insert into the sash profile.

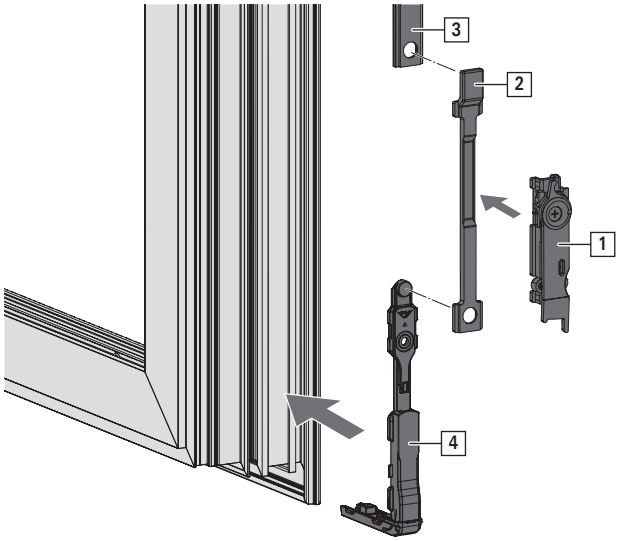

2. Secure the corner drive to the sash using the retaining fork.

INFO
Do not fix the run-up block in place until the sash is connected to the frame and the run-up block is aligned in its final position.

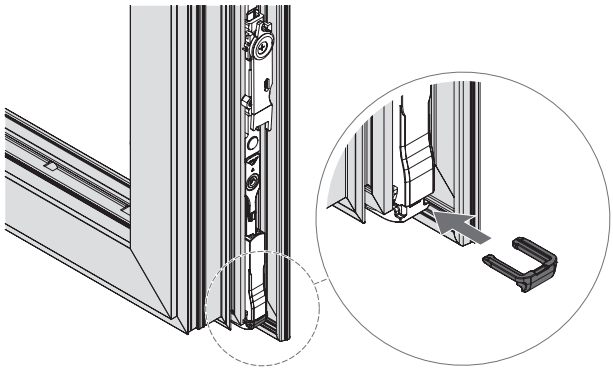

8.5.3 Frame

INFO

Install the frame components when the frame is horizontal (workshop).

Once the frame is fitted, the reveal may prevent frame components from being installed correctly.

8.5.3.1 Pivot rest | 90 - 160 kg

Installing the pivot rest

1. Swing the bearing into the profile so that the clamp strip engages in the frame groove.

   Position the bearing flush in the corner.

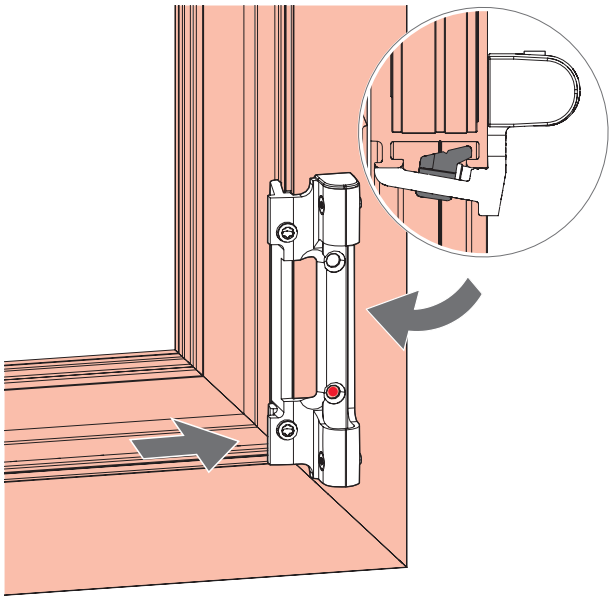

2. Push the bearing onto the profile so that it is level and fasten with preassembled screws [1].

   Tool: T25 hexalobular socket

   Torque: 3.5 – 5.0 Nm

   Check that the bearing is fitted securely.

   INFO

   - Do not leave a gap between the bearing and profile. The bearing must be positioned securely on the profile without any gaps. Follow the screwdriving sequence.
   - Use an additional screw [2] for:

     SH > 2400 mm

     S.kg > 130 kg

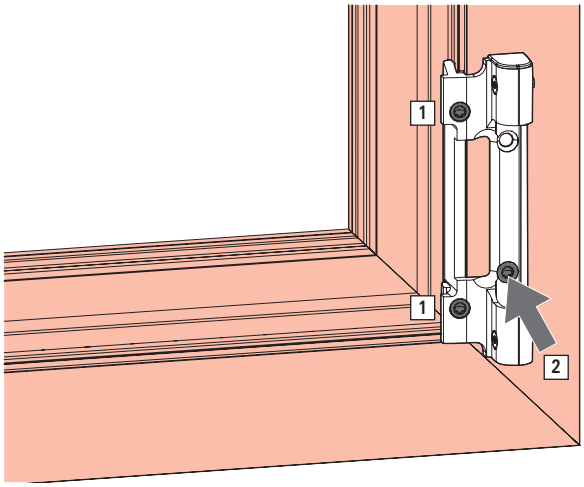

8.5.3.2 Pivot rest | 200 kg

Installing the pivot rest

1. Push the bearing on the predrilled frame onto the profile so that it is level and fasten with screws.

   Tool: T25 hexalobular socket

   Torque: 3.5 – 5.0 Nm

   Check that the bearing is fitted securely.

INFO
Do not leave a gap between the bearing and profile. The bearing must be positioned securely on the profile without any gaps.

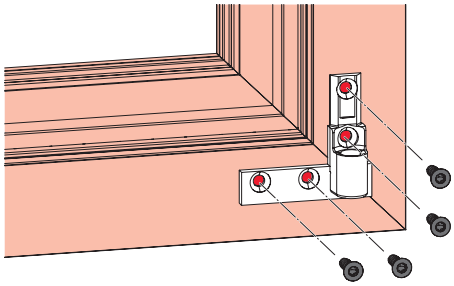

8.5.3.3 Fixing connecting-link | 90 - 130 kg

Installing the fixing connecting-link

1. Insert the fixing connecting-link [1] into the drilling jig [2] [A].

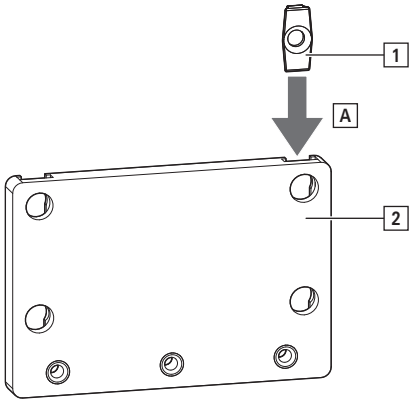

2. Push the drilling jig onto the profile so that it is level and position in the corner using cams.

   Install the fixing connecting-link through the drilling jig with a screw [B].

   Tool: T25 hexalobular socket

   Torque: 2 – 2.5 Nm

   Check that the fixing connecting-link is fitted securely.

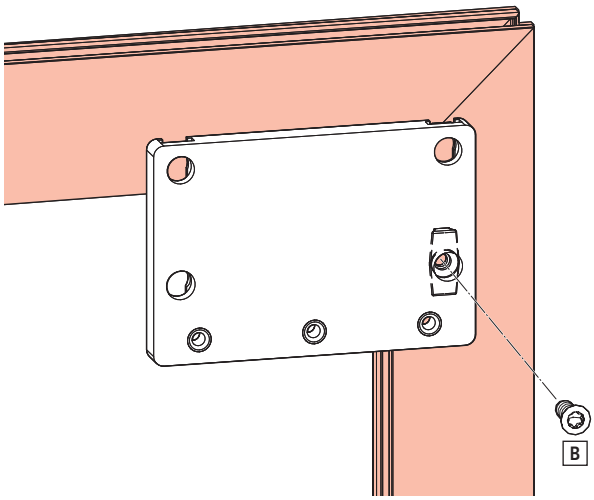

> **INFO**
> Do not leave a gap between the fixing connecting-link and profile. The fixing connecting-link must be positioned securely on the profile without any gaps.
>
> With solid material, lubricate the screws.

3. Remove the drilling jig by pulling it downwards [C].

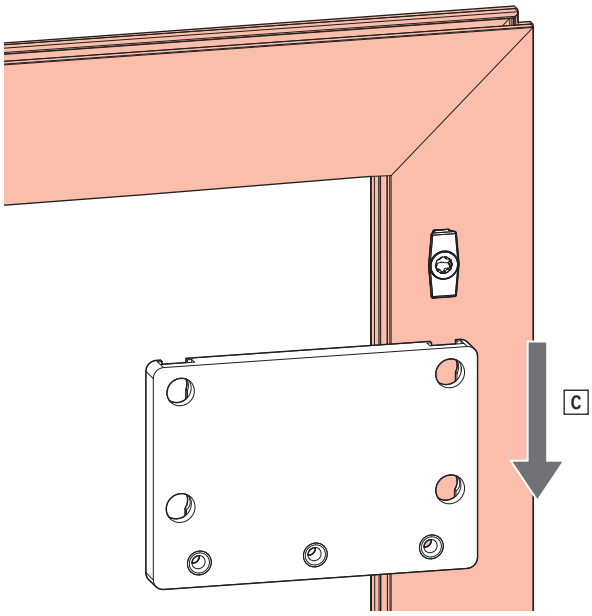

8.5.3.4 Fixing connecting-link | 160 kg

Installing the fixing connecting-link

1. Remove the preassembled fixing connecting-link from the counter bearing. Insert the fixing connecting-link [1] and the fixing connecting-link for the counter bearing [2] into the drilling jig [3] in the order shown [A].

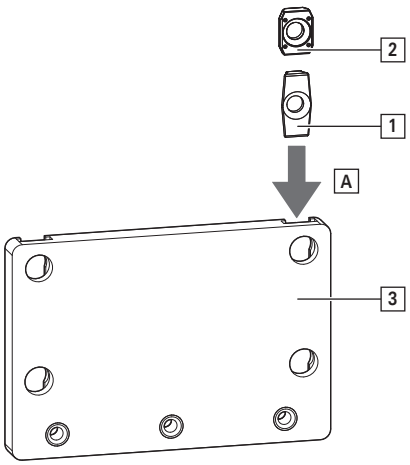

2. Push the drilling jig onto the profile so that it is level and position in the corner using cams.

   Install the fixing connecting-link through the drilling jig with screws [B].

   Tool: T25 hexalobular socket

   Torque: 2 – 2.5 Nm

   Check that the fixing connecting-link is fitted securely.

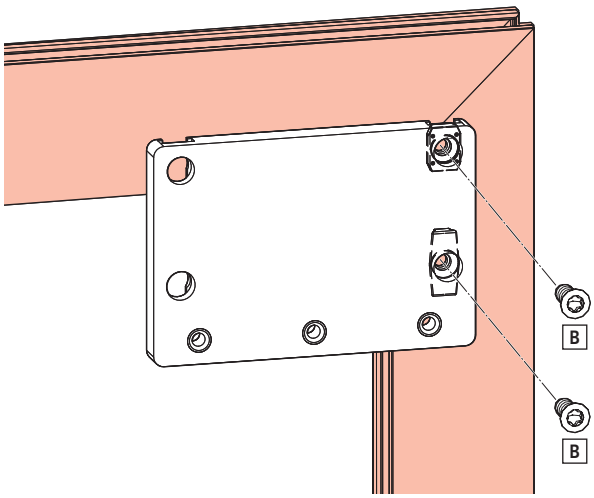

INFO

Do not leave a gap between the fixing connecting-link and profile. The fixing connecting-link must be positioned securely on the profile without any gaps.

With solid material, lubricate the screws.

3. Remove the drilling jig by pulling it downwards [C].

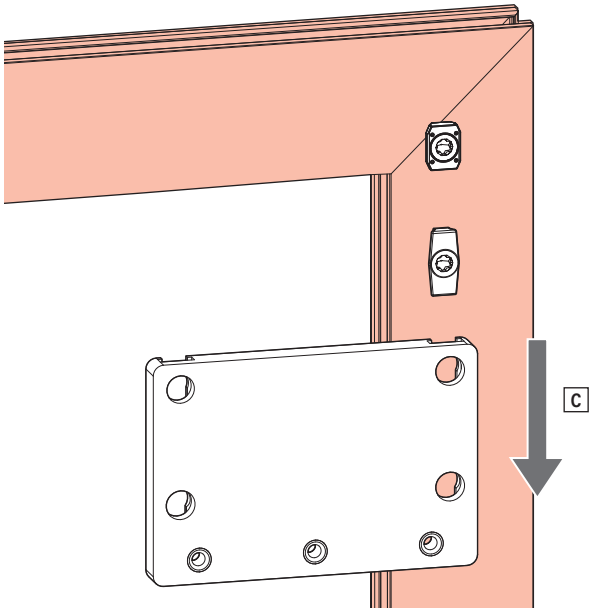

8.5.3.5 Stay bearing | 90 - 130 kg

Installing the stay bearing

1. Swing the bearing into the profile so that the clamp strip engages in the frame groove.

   Slide the bearing onto the fixing connecting-link. While doing so, ensure that the clamp strip lies on the frame groove without any gaps [A].

   INFO
   Only slide the bearing into position by hand to avoid damaging the paintwork.

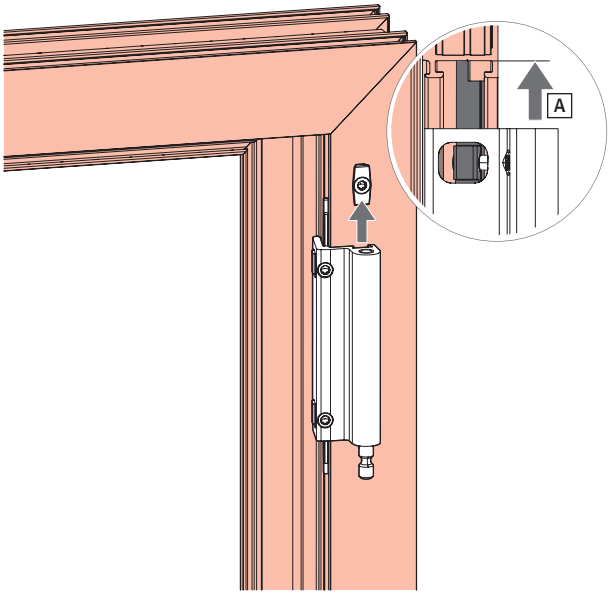

2. Push the bearing onto the profile so that it is level and fasten with preassembled screws.

   Tool: T25 hexalobular socket

   Torque: 3.5 – 5.0 Nm

   Check that the bearing is fitted securely.

   INFO
   Do not leave a gap between the fixing connecting-link and profile. The fixing connecting-link must be positioned securely on the profile without any gaps.

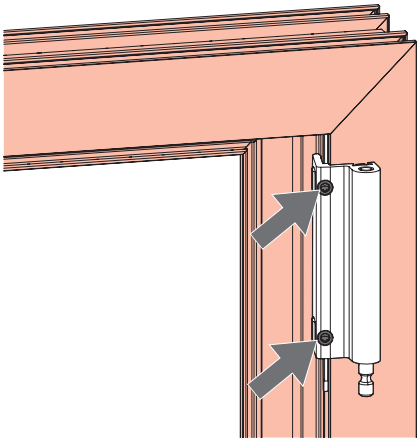

8.5.3.6 Stay bearing | 160 kg

Installing the stay bearing

1. Swing the bearing into the profile so that the clamp strip engages in the frame groove.

   Slide the bearing onto the fixing connecting-link. While doing so, ensure that the clamp strip lies on the frame groove without any gaps [A].

INFO
Only slide the bearing into position by hand to avoid damaging the paintwork.

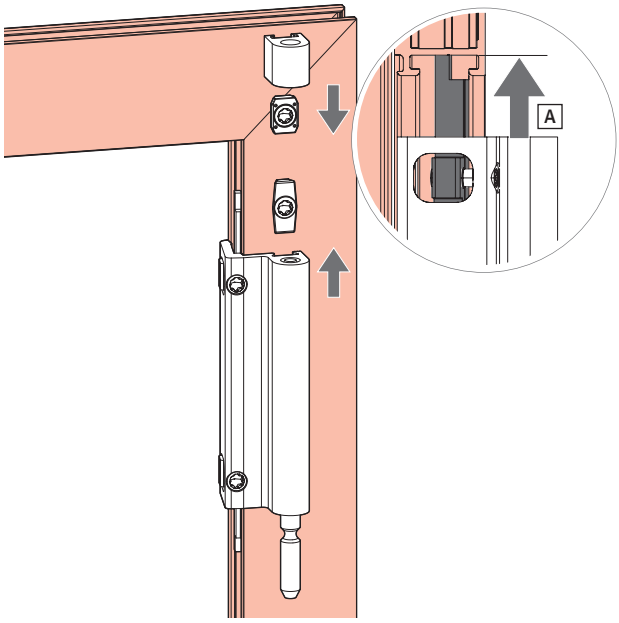

2. Slide the counter bearing onto the fixing connecting-link so that it locks in place.

3. Push the bearing onto the profile so that it is level and fasten with preassembled screws.

   Tool: T25 hexalobular socket

   Torque: 3.5 – 5.0 Nm

   Check that the bearing is fitted securely.

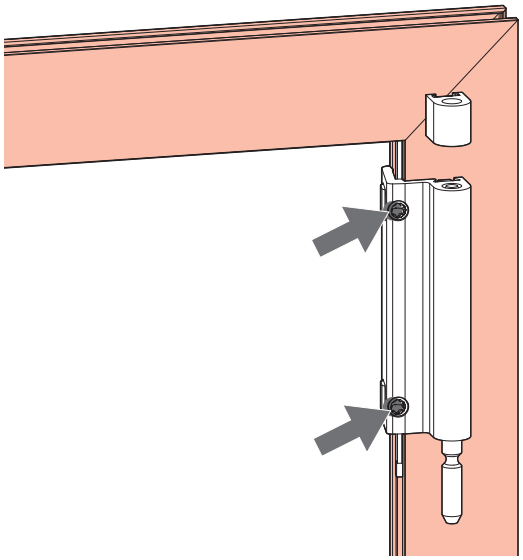

8.5.3.7 Stay bearing | 200 kg

Installing the stay bearing

1. Push the bearing onto the profile so that it is level and fasten with six screws.

   Tool: T25 hexalobular socket

   Torque: 3.5 – 5.0 Nm

   Check that the bearing is fitted securely.

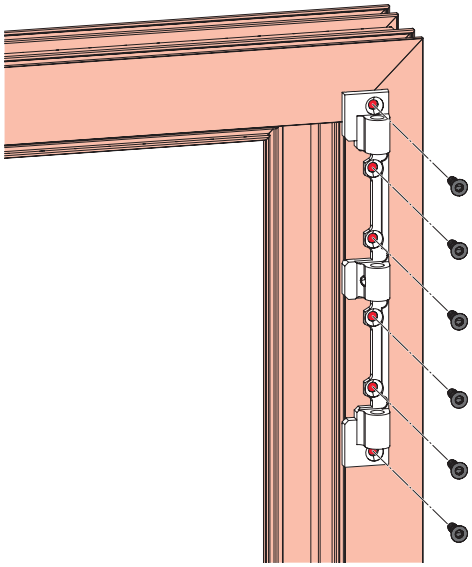

8.5.3.8 Additional stay arm | 90 - 200 kg

Installing the additional stay arm

1. Swing the additional scissor stay arm, compl., into the frame at the specified position (see installation drawing → *9 "Installation drawings" from page 419*).

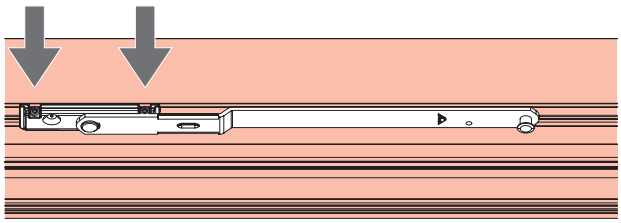

2. Fasten the bearing with preassembled threaded pins.

   Tool: T10 hexalobular socket

Torque: 2 – 2.5 Nm

3. Open the additional scissor stay arm and position the retaining spring next to the bearing.
   Fasten with a preassembled threaded pin.
   Tool: T10 hexalobular socket
   Torque: 2 – 2.5 Nm

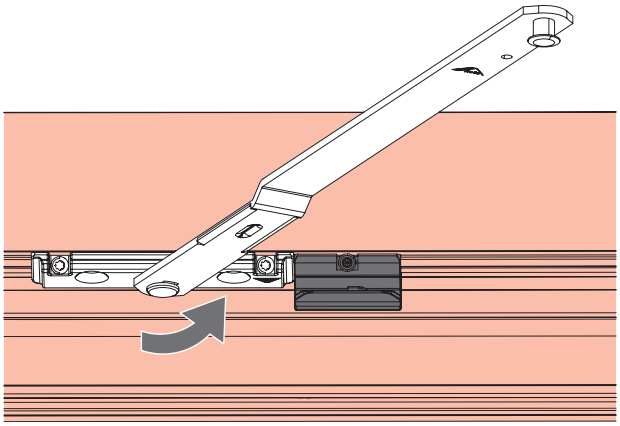

4. Clip the additional scissor stay arm into the retaining spring.

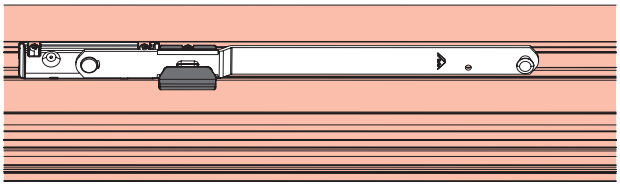

8.5.3.9 Sash lifter | 200 kg

Installing the sash lifter

1. Swing the stop into the profile at the specified position on the locking side (see installation drawing → *9.2.6 "T&T accessible | 90 - 130 kg" from page 427*).

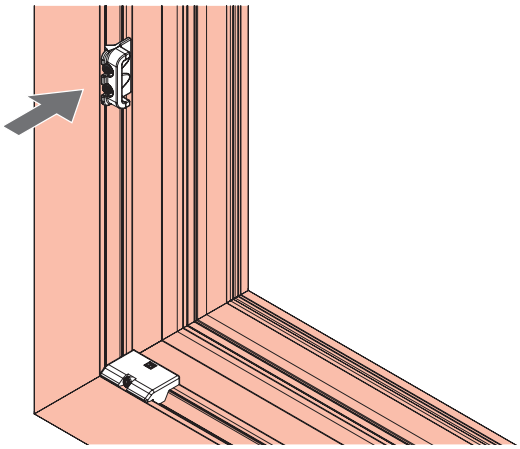

2. Fasten the stop with preassembled threaded pins.
   Tool: T10 hexalobular socket
   Torque: 2 – 2.5 Nm

8.5.4 Joining the sash and frame

WARNING

Heavy loads pose the risk of injury and property damage.

Lifting and carrying heavy loads in an uncontrolled manner may lead to physical injury and property damage.

- Transport and installation must be carried out by at least two people.
- Use transportation means. → *14 "Transport" from page 517*

8.5.4.1 T&T hinge side | 90 - 130 kg

1. Move the handle to the turn position.

2. With the sash slightly tilted inwards, guide it along the frame in a downwards direction [A] until you feel the hinge engage in the bearing [B].

INFO

The frame grooves and sash grooves, as well as the components installed in them, must be free from component residues.

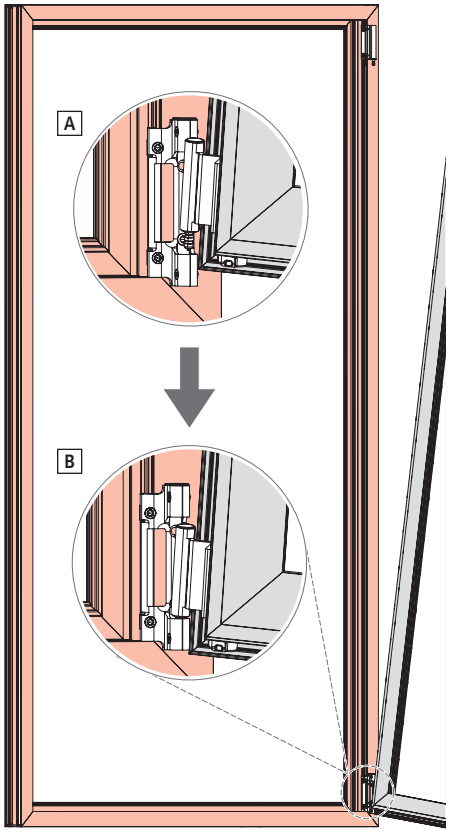

3. Position the sash with hinge above the bearing.

4. Push the preassembled pin upwards [C].

5. Screw the preassembled threaded pin fully (i.e. as far as it will go) into the hinge to secure the pin [D].

   Tool: T10 hexalobular socket

   Torque: 2 – 2.5 Nm

   Check that the hinge is fitted securely.

WARNING
An unsecured sash may pose a risk of death!
The sash may fall if the pin joining the bearing and the hinge is not secure.
- Check that the pin is seated flush with the bearing.
- Check that the threaded pin is flush with the stay hinge [E].

  The threaded pin must not protrude.

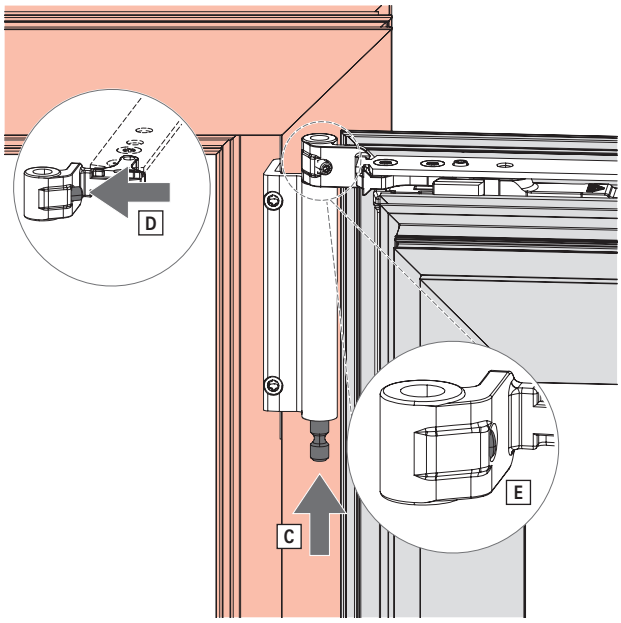

8.5.4.2 T&T hinge side | 160 kg

1. Move the handle to the turn position.

2. With the sash slightly tilted inwards, guide it along the frame in a downwards direction [A] until you feel the hinge engage in the bearing [B].

INFO
The frame grooves and sash grooves, as well as the components installed in them, must be free from component residues.

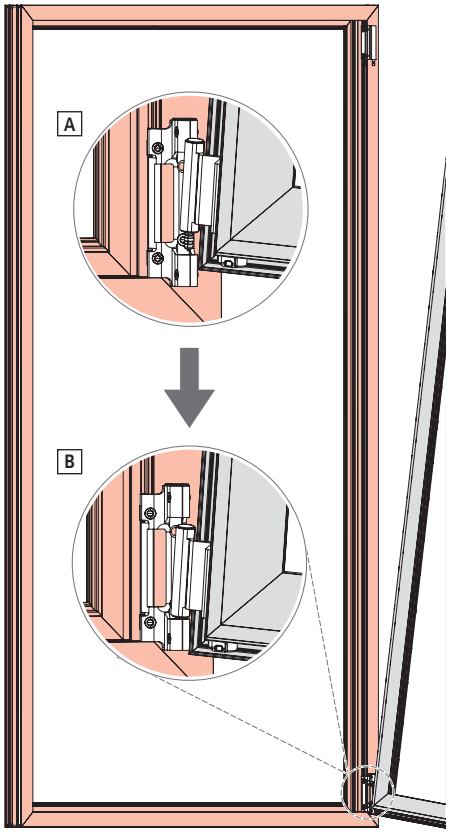

3. Align the sash with hinge between the counter bearings on the stay bearing.

4. Push the preassembled pin upwards [C].

INFO
Dispose of the retaining sleeve that falls out [D].

5. Screw the preassembled threaded pin fully (i.e. as far as it will go) into the Turn-Only stay hinge to secure the pin [E].

   Tool: T10 hexalobular socket

   Torque: 2 – 2.5 Nm

   Check that the hinge is fitted securely.

WARNING
An unsecured sash may pose a risk of death!
The sash may fall if the pin joining the bearing and the hinge is not secure.
- Check that the pin is seated flush with the bearing.
- Check that the threaded pin is flush with the stay hinge [F].

  The threaded pin must not protrude.

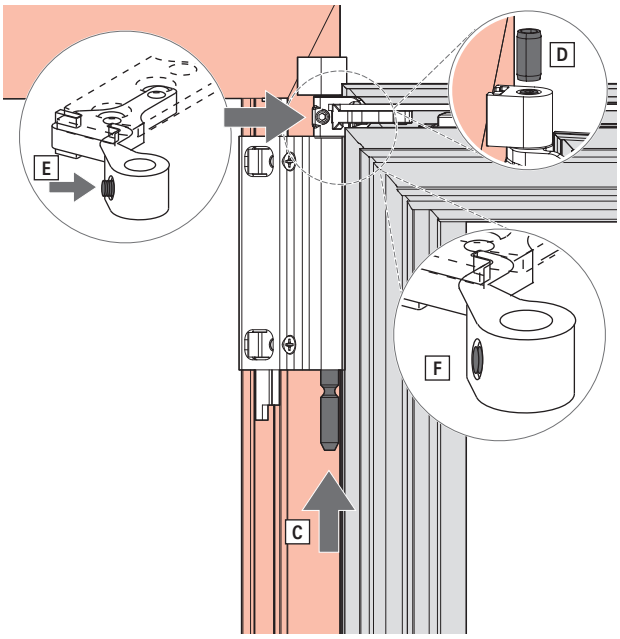

8.5.4.3 T&T hinge side | 200 kg

1. Move the handle to the turn position.

2. With the sash slightly tilted inwards, guide it along the frame in a downwards direction [A] until you feel the hinge [1] engage in the bearing [2] [B].

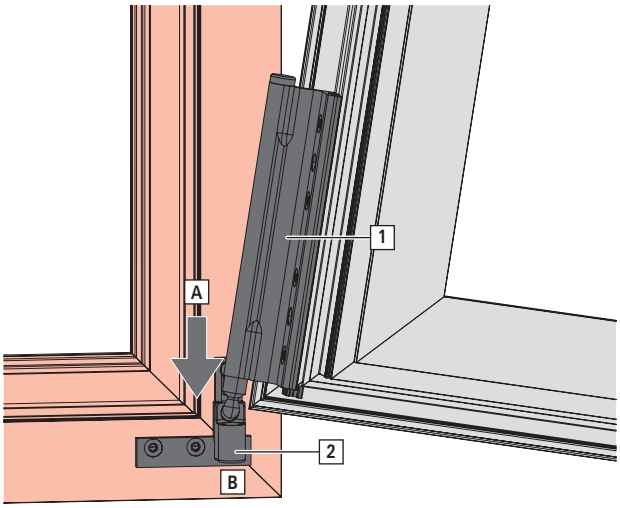

3. Insert the sash with hinge between the bearings.

INFO
The frame grooves and sash grooves, as well as the components installed in them, must be free from component residues.

4. Insert the pin from below and push it upwards.

5. Screw the preassembled threaded pin [3] fully (i.e. as far as it will go) into the bearing to secure the pin.
   Tool: T10 hexalobular socket
   Torque: 2 – 2.5 Nm
   Check that the hinge is fitted securely.

WARNING
An unsecured sash may pose a risk of death!
The sash may fall if the pin joining the bearing and the hinge is not secure.
- Check that the pin is seated flush with the bearing.
- Check that the threaded pin is flush with the stay hinge [C].
  The threaded pin must not protrude.

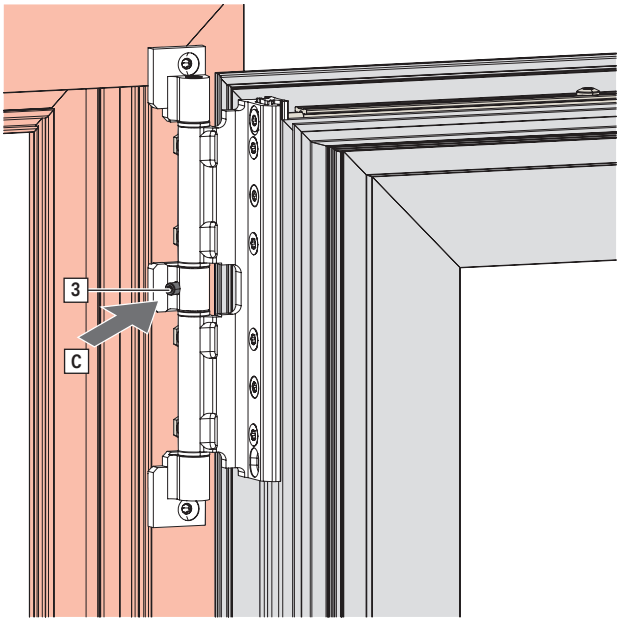

8.6 Turn-Only hardware

8.6.1 Drilling and routing dimensions

8.6.1.1 Clamping block | 200 kg

for T-O hinge | 200 kg

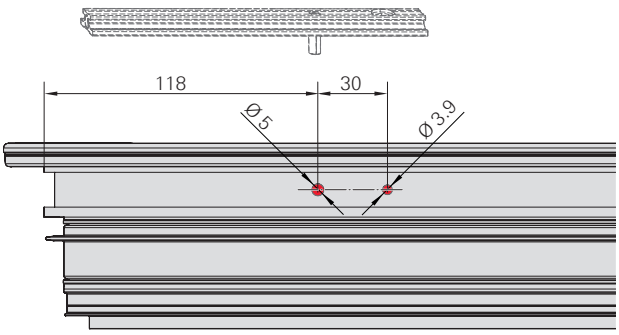

Drill the hole:
1 x Ø 3.9 mm, at least 19 mm deep.
1 x Ø 5.0 mm, at least 11 mm deep.

8.6.1.2 Clamping block | 300 kg

for T-O hinge | 300 kg

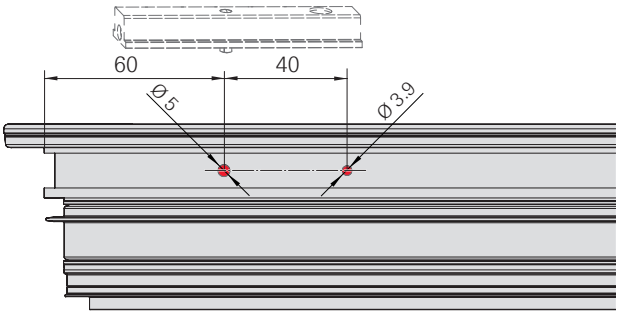

Drill the hole:

1 x Ø 3.9 mm, at least 19 mm deep.

1 x Ø 5.0 mm, at least 5 mm deep.

8.6.1.3 CD hinge | 80 kg or 100 kg

INFO
Only when self-tapping screws are used.

For sash component

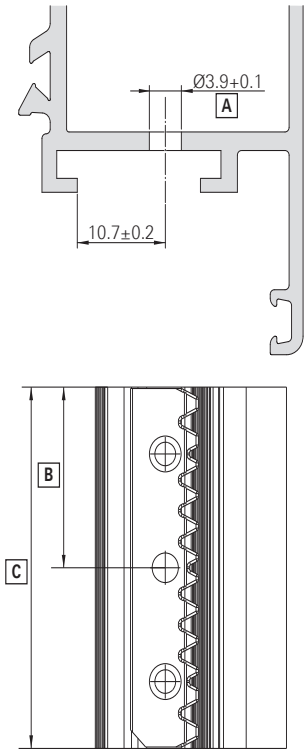

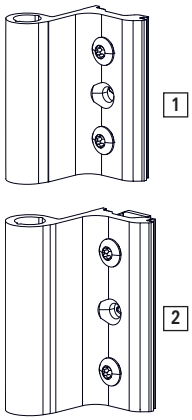

Only predrill for the hinge through the first profile wall.

[A] Ø 3.9 $^{+0.1}$

[1] Hinge | 80 kg:

[C] 27

[D] 54

[2] Hinge | 100 kg:

[B] 31.8

[C] 63.5

INFO
In solid material, drill out a Ø 4.1 mm hole.

For frame component

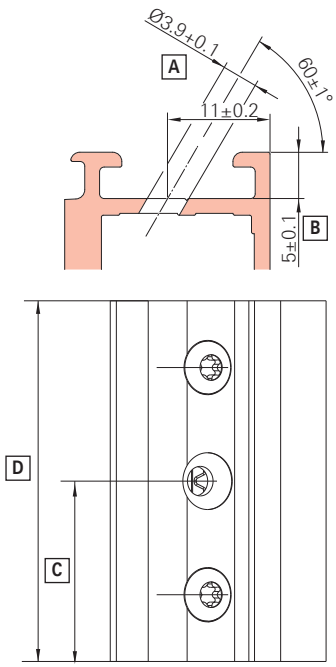

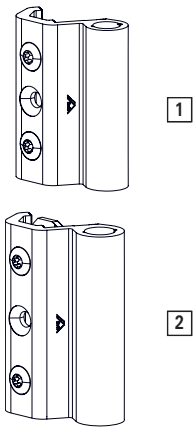

Only predrill for the bearing through the first profile wall.

[A] Ø 3.9 $^{+0.1}$

[B] Groove depth

[1] Bearing | 80 kg:

[C] 27

[D] 54

[2] Bearing | 100 kg:

[C] 31.8

[D] 63.5

INFO
In solid material, drill out a Ø 4.1 mm hole.

8.6.1.4 T-O hinge | 300 kg

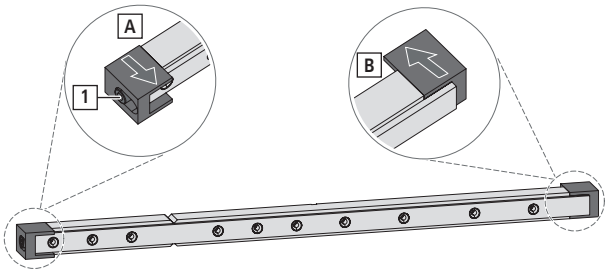

Prepare the drilling jig by slightly undoing the screws [1] at both ends of the jig and moving the stops [A] [B] as shown.

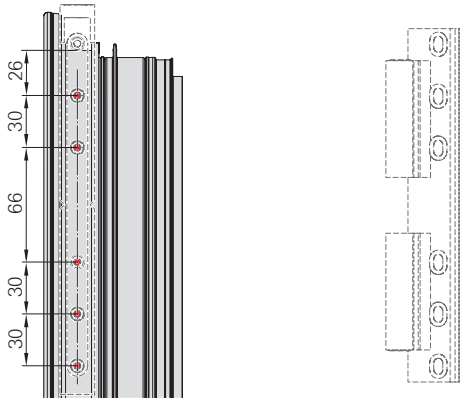

Position the drilling jig with stop on the sash.

Drill holes:

5 x Ø 3.9 mm, at least 17 mm deep.

INFO

- In solid material, drill out a Ø 4.1 mm hole.
- Screw-in depth → *from page 295*
- Ensure that you choose the right drill holes on the drilling jig.

8.6.1.5 CL hinge | 300 kg

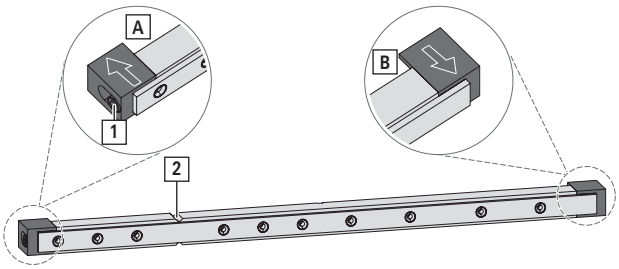

Prepare the drilling jig by slightly undoing the screws [1] at both ends of the jig and moving the stops [A] [B] as shown.

Place the drilling jig with notch [2] on the centre of the sash.

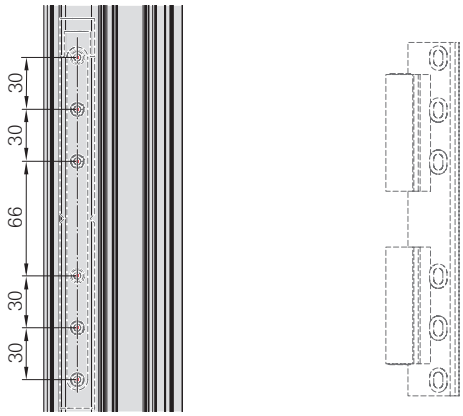

Drill holes:

6 x Ø 3.9 mm, at least 17 mm deep.

INFO

- In solid material, drill out a Ø 4.1 mm hole.
- Screw-in depth → *from page 295*
- Ensure that you choose the right drill holes on the drilling jig.

8.6.1.6 T-O corner hinge | 300 kg

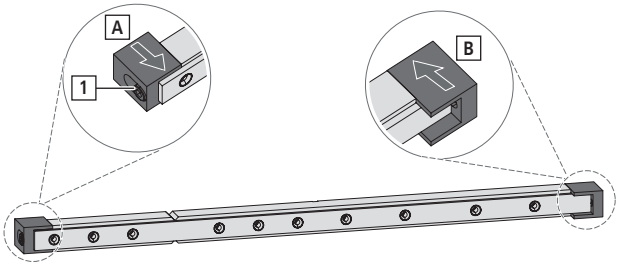

Prepare the drilling jig by slightly undoing the screws [1] at both ends of the jig and moving the stops [A] [B] as shown.

Position the drilling jig with stop on the sash.

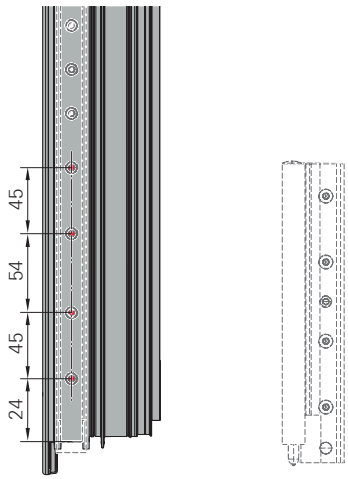

Drill holes:

4 x Ø 3.9 mm, at least 17 mm deep.

INFO

- In solid material, drill out a Ø 4.1 mm hole.
- Screw-in depth → *from page 295*
- Ensure that you choose the right drill holes on the drilling jig.

8.6.1.7 Stay bearing fixing connecting-link | 90 - 130 kg

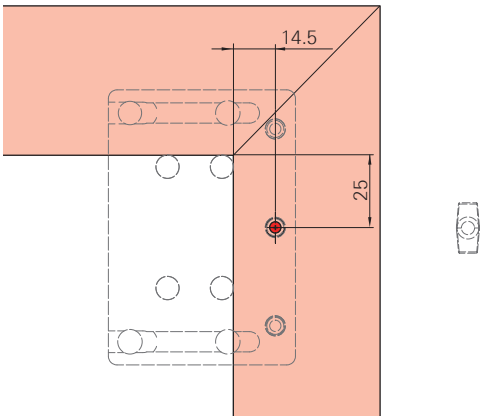

Place the drilling jig on the cams in the frame.

Drill the hole:

1 x Ø 3.9 mm, at least 14 mm deep.

INFO

In solid material, drill out a Ø 4.1 mm hole.

Screw-in depth → *from page 295*

8.6.1.8 Fixing connecting-links for stay bearing and counter bearing | 160 kg

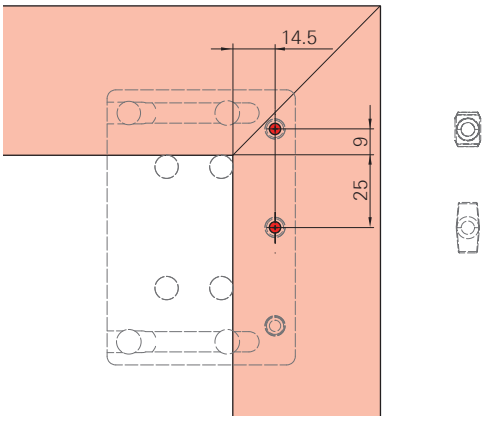

Place the drilling jig on the cams in the frame.

Drill holes:

2 x Ø 3.9 mm, at least 14 mm deep.

INFO
In solid material, drill out a Ø 4.1 mm hole.
Screw-in depth → *from page 295*

8.6.1.9 Stay bearing | 200 kg

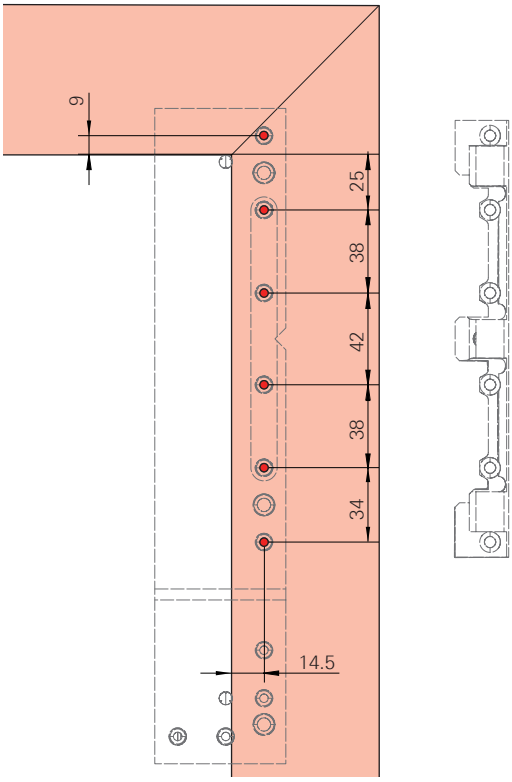

Place the drilling jig on the cams in the frame.

Drill holes:

6 x Ø 3.9 mm, at least 14 mm deep.

INFO
In solid material, drill out a Ø 4.1 mm hole.
Screw-in depth → *from page 295*

8.6.1.10 T-O bearing | 300 kg

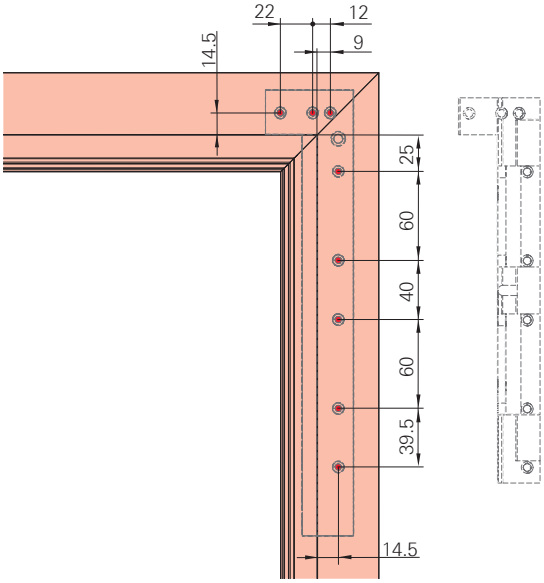

Place the drilling jig on the profile leg in the frame.

Drill holes:

8 x Ø 4.1 mm, at least 14 mm deep.

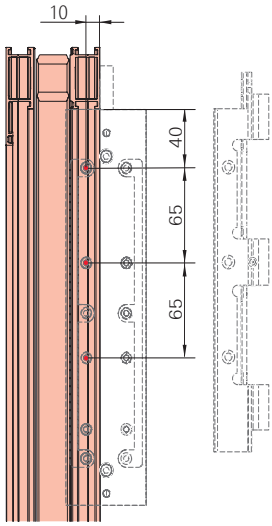

Drill the inside of the frame.

Drill holes:

3 x Ø 3.9 mm, at least 14 mm deep.

INFO

In solid material, drill out a Ø 4.1 mm hole.

Screw-in depth → *from page 295*

8.6.1.11 CL T-O bearing | 200 kg

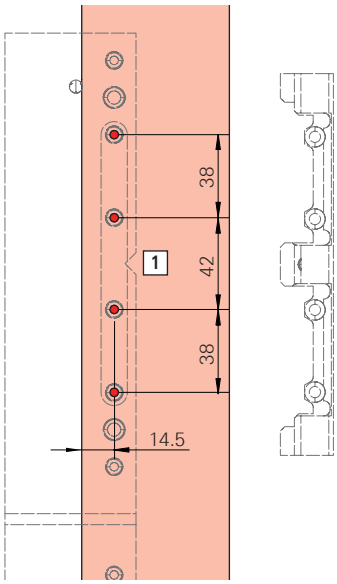

Place the drilling jig with notch [1] at the centre of the sash.

Drill holes:

4 x Ø 3.9 mm, at least 14 mm deep.

INFO
In solid material, drill out a Ø 4.1 mm hole.

Screw-in depth → *from page 295*

8.6.1.12 CL bearing | 300 kg

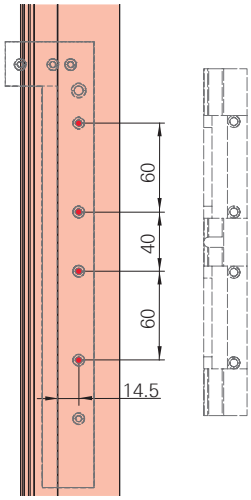

Place the drilling jig on the profile leg in the frame. Align with the centre of the sash.

Drill holes:

4 x Ø 4.1 mm, at least 14 mm deep.

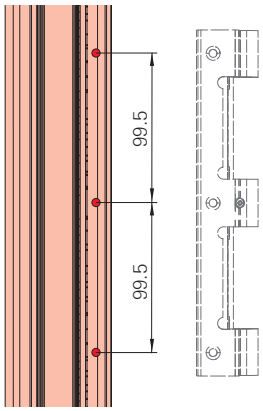

Drill the inside of the frame.

Drill holes:

3 x Ø 3.9 mm, at least 23 mm deep.

INFO
In solid material, drill out a Ø 4.1 mm hole.

Screw-in depth → *from page 295*

8.6.1.13 Pivot rest | 90 - 160 kg

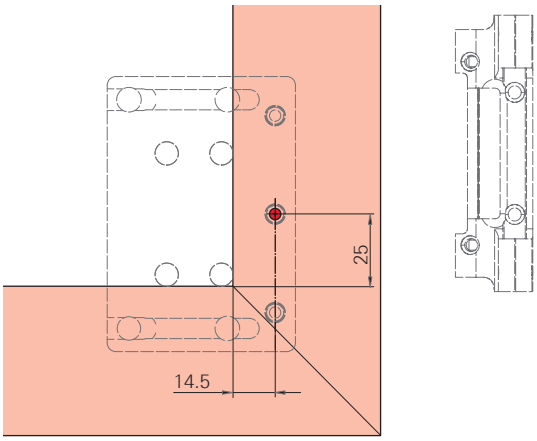

Place the drilling jig on the cams in the frame.

Drill the hole:

1 x Ø 3.9 mm, at least 14 mm deep.

INFO
In solid material, drill out a Ø 4.1 mm hole.

Screw-in depth → *from page 295*

INFO
- 90 - 130 kg:
  Pivot rest screw from SH > 2400 mm.
- > 130 kg:
  Always use a pivot rest screw.

8.6.1.14 Pivot rest | 200 kg

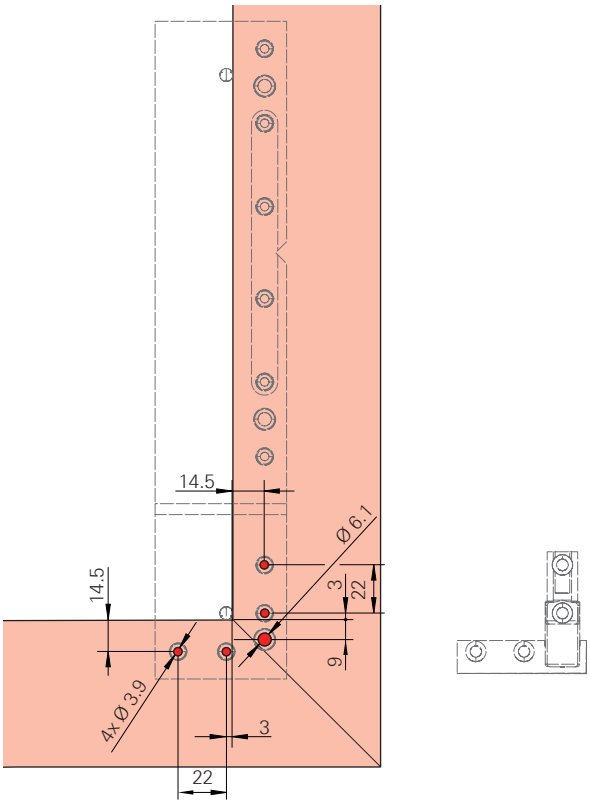

Place the drilling jig on the cams in the frame.

Drill holes:

4 x Ø 3.9 mm, at least 14 mm deep.

1 x Ø 6.1 mm, at least 7 mm deep.

INFO
In solid material, drill out a Ø 4.1 mm hole.

Screw-in depth → *from page 295*

8.6.1.15 Pivot rest | 300 kg

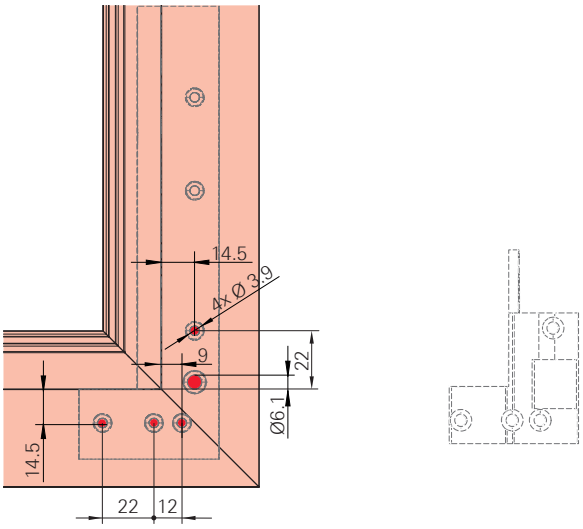

Place the drilling jig on the profile leg in the frame.

Drill holes:

4 x Ø 4.1 mm, at least 23 mm deep.

1 x Ø 6.1 mm, at least 7 mm deep.

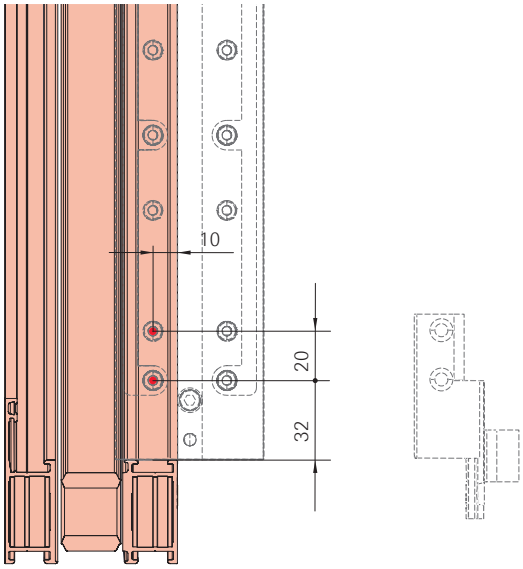

Drill the inside of the frame.

Drill holes:

2 x Ø 3.9 mm, at least 23 mm deep.

INFO

In solid material, drill out a Ø 4.1 mm hole.

Screw-in depth → *from page 295*

8.6.2 Sash

8.6.2.1 Corner hinge | 90 - 130 kg

DANGER

Risk of death caused by using the wrong corner hinge!

The sash could fall out if a reinforced corner hinge has not been installed for SH > 2700 mm.

- Check to ensure that the correct corner hinge has been fitted (see figure).

Checking the corner hinge

1. Take the value for the corner hinge dimension X from the table and check the corner hinge.

SH	Description	X	HP
≤ 2700	Corner hinge	3.2	> 3.5
> 2700	Corner hinge, reinforced	4.2	> 5

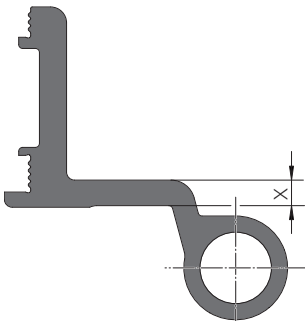

Installing the corner hinge

1. Insert the pivot-rest pin from below.

2. Slide the hinge, including preassembled clampable corner bracket, into the profile until the clampable corner bracket is resting on the base of the sash groove [A].

3. Push the hinge onto the profile so that it is level and fasten with screws [1].

   Tool: T25 hexalobular socket

   Torque: 3.5 – 5.0 Nm

   Check that the hinge is fitted securely.

INFO

- Do not leave a gap between the hinge and profile. The hinge must be positioned securely on the profile without any gaps.
- Do not damage the pin when tapping it in. Do not use a metal hammer.

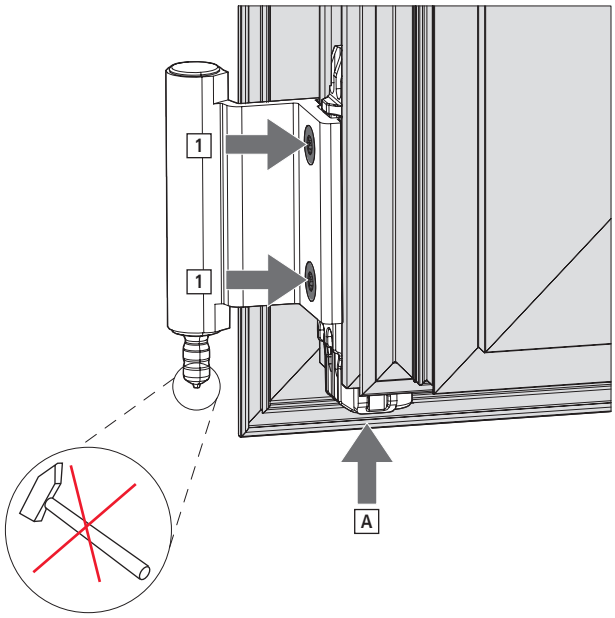

8.6.2.2 Corner hinge | 160 kg

Installing the corner hinge

1. Slide the hinge, including preassembled pivot-rest pin and clampable corner bracket, into the profile until the clampable corner bracket is resting on the base of the sash groove [A].

2. Push the hinge onto the profile so that it is level and fasten with screws [1].

   Tool: T25 hexalobular socket

   Torque: 3.5 – 5.0 Nm

   Check that the hinge is fitted securely.

INFO

Do not leave a gap between the hinge and profile. The hinge must be positioned securely on the profile without any gaps.

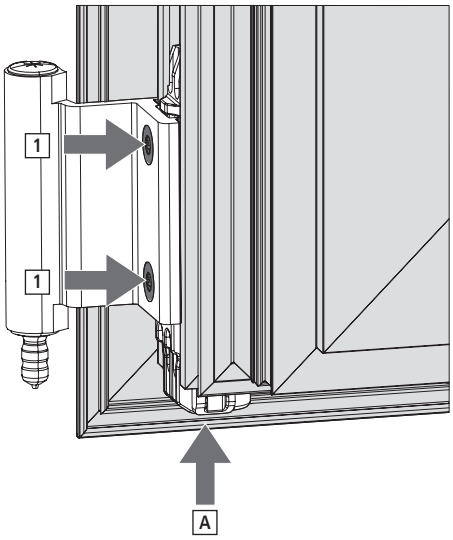

8.6.2.3 Corner hinge | 200 kg

Installing the corner hinge

1. Slide the hinge, including preassembled clampable corner bracket, into the profile until the slotted pin is resting on the base of the sash groove [A].

2. Push the hinge onto the profile so that it is level and fasten with screws [1].

   Tool: T25 hexalobular socket

   Torque: 3.5 – 5.0 Nm

   Check that the hinge is fitted securely.

INFO

- Do not leave a gap between the hinge and profile. The hinge must be positioned securely on the profile without any gaps.
- Do not damage the pin when tapping it in. Do not use a metal hammer.

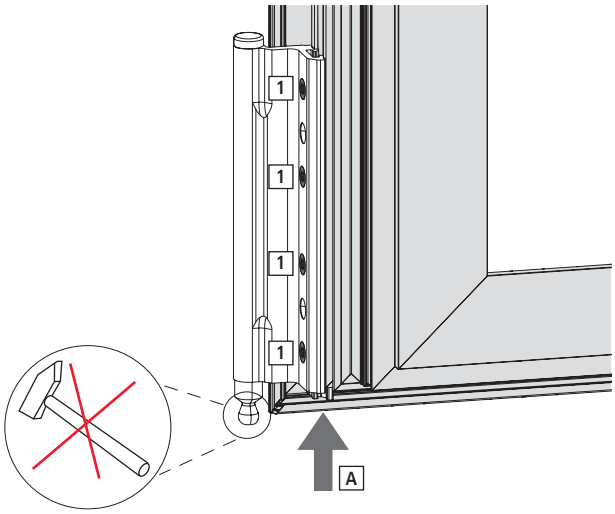

8.6.2.4 Corner hinge | 300 kg

Installing the corner hinge

1. Slide the hinge into the profile until the slotted pin is resting on the base of the sash groove [A].

2. Push the hinge onto the profile so that it is level and fasten with screws [1].

   Tool: T25 hexalobular socket

   Torque: 3.5 – 5.0 Nm

   Check that the hinge is fitted securely.

INFO

- Do not leave a gap between the hinge and profile. The hinge must be positioned securely on the profile without any gaps.
- Do not damage the pin when tapping it in. Do not use a metal hammer.

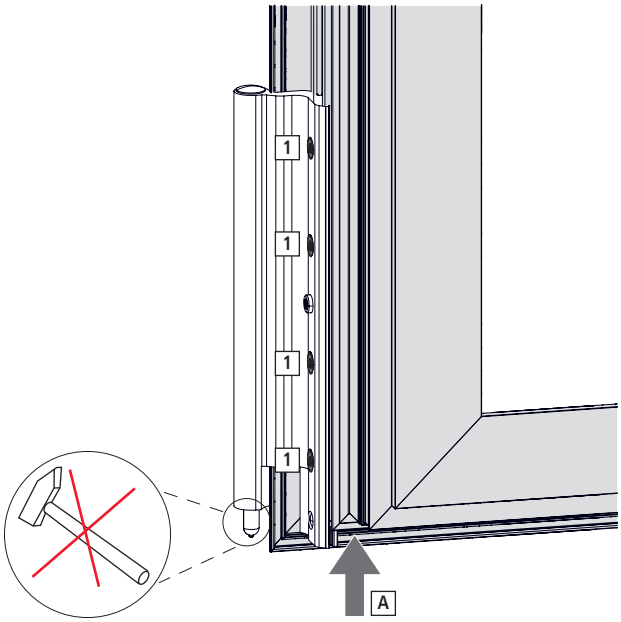

8.6.2.5 CD hinge | 50 kg: sash component (hinge)

Installing the top hinge

1. Position the top hinge.

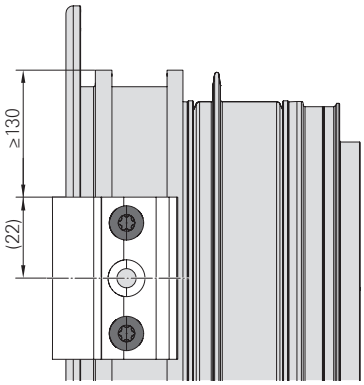

2. Push the hinge onto the profile so that it is level and slightly tighten the two preassembled screws.

   Tool: T25 hexalobular socket

   Torque: 1.5 – 2.0 Nm

INFO
Installation is not completed until the sash is joined to the frame → *from page 373*.

3. Insert the pin into the Turn-Only hinge bush from above and push downwards.

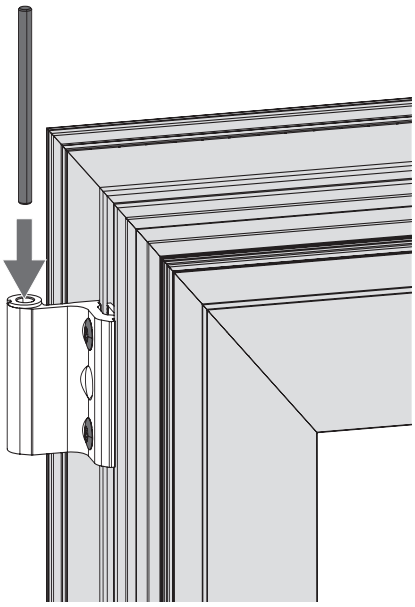

Installing the bottom hinge

1. Position the bottom hinge.

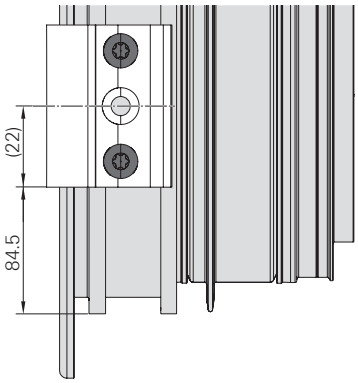

2. Push the hinge onto the profile so that it is level and fasten with two preassembled screws.
   Tool: T25 hexalobular socket
   Torque: 4.5 – 6.0 Nm
   Check that the hinge is fitted securely.

Installing the central hinge

1. Position the hinge depending on the SH (see installation drawing → *from page 455*).

2. Push the hinge onto the profile so that it is level and fasten with two preassembled screws.
   Tool: T25 hexalobular socket
   Torque: 4.5 – 6.0 Nm
   Check that the hinge is fitted securely.

8.6.2.6 CD hinge | 80 kg or 100 kg: sash component (hinge)

INFO

Figures: CD hinge | 100 kg.

Installation is identical for the CD hinge | 80 kg.

Installing the top hinge

⇨ The sash must be predrilled for the additional screw → *8.6.1.3 "CD hinge | 80 kg or 100 kg" from page 336*.

1. Position the top hinge.
   CD hinge | 80 kg: Y = 27 mm
   CD hinge | 100 kg: Y = 31.8 mm

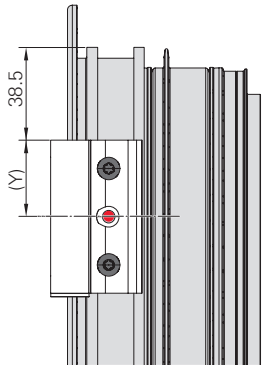

2. Push the hinge onto the profile so that it is level and fasten with two preassembled screws.
   Tool: T25 hexalobular socket
   Torque: 4.5 – 6.0 Nm

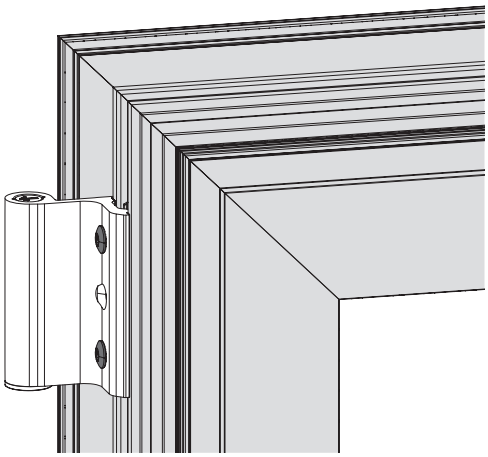

3. Fasten the hinge to the sash with one additional screw.
   Tool: T25 hexalobular socket
   Torque: 1.5 – 2.0 Nm
   Check that the hinge is fitted securely.

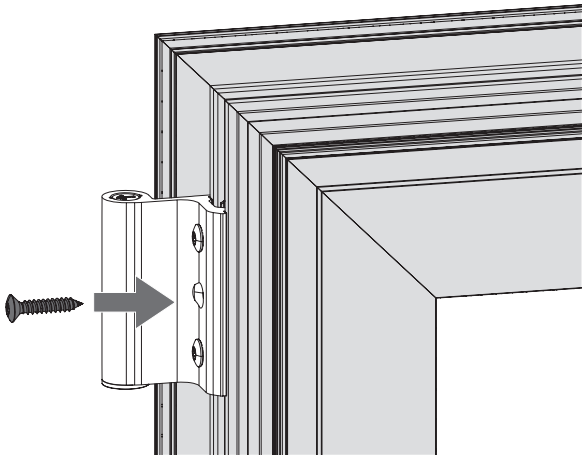

Installing the bottom hinge

⇨ The sash must be predrilled for the additional screw → *8.6.1.3 "CD hinge | 80 kg or 100 kg" from page 336*.

1. Position the bottom hinge according to weight:
   CD hinge | 80 kg: X = 94.5 mm; Y = 27 mm
   CD hinge | 100 kg: X = 105 mm; Y = 31.8 mm

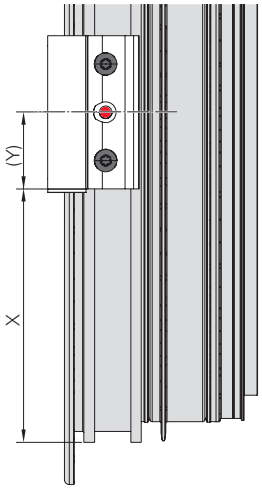

2. Push the hinge onto the profile so that it is level and fasten with two preassembled screws.
   Tool: T25 hexalobular socket
   Torque: 4.5 – 6.0 Nm

3. Fasten the hinge to the sash with one additional screw.
   Tool: T25 hexalobular socket
   Torque: 1.5 – 2.0 Nm
   Check that the hinge is fitted securely.

Installing the central hinge

⇨ The sash must be predrilled for the additional screw → *8.6.1.3 "CD hinge | 80 kg or 100 kg" from page 336*.

1. Position the hinge depending on the SH (see installation drawing → *from page 455*).

2. Push the hinge onto the profile so that it is level and fasten with two preassembled screws.
   Tool: T25 hexalobular socket
   Torque: 4.5 – 6.0 Nm

3. Fasten the hinge to the sash with one additional screw.
   Tool: T25 hexalobular socket
   Torque: 1.5 – 2.0 Nm
   Check that the hinge is fitted securely.

8.6.2.7 T-O hinge | 90 kg

Installing the T-O hinge

⇨ For elements with SH > 1300 mm, insert the clamping support-strip for the central hinge.

1301 – 1800	1
1801 – 2400	2
> 2400	3

1. Insert the T-O hinge in the profile and put it into position.

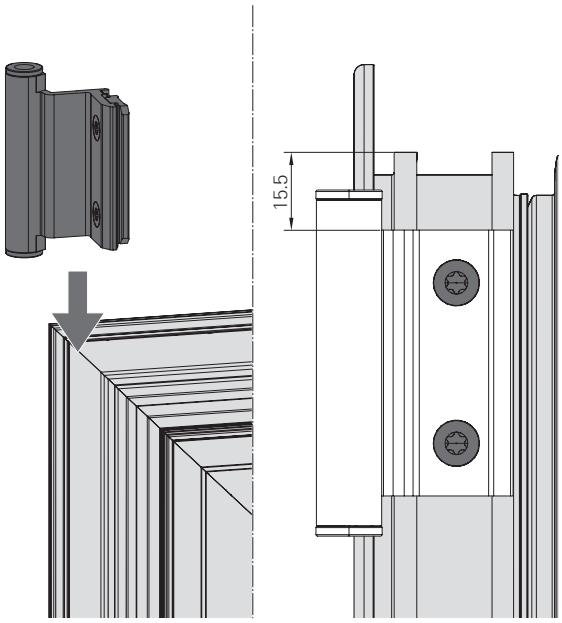

2. Push the T-O hinge onto the profile so that it is level and fasten with preassembled screws [1].
   Tool: T25 hexalobular socket
   Torque: 3.5 – 5.0 Nm
   Check that the hinge is fitted securely.

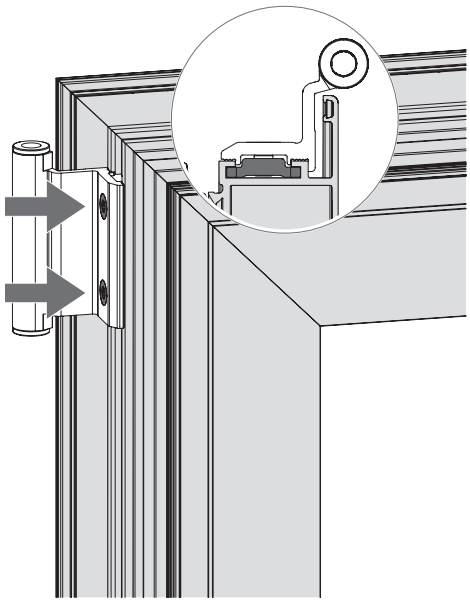

8.6.2.8 Turn-Only stay hinge | 90 - 160 kg

Preassembling the Turn-Only stay hinge

1. Fold the Turn-Only stay hinge [1] upwards.

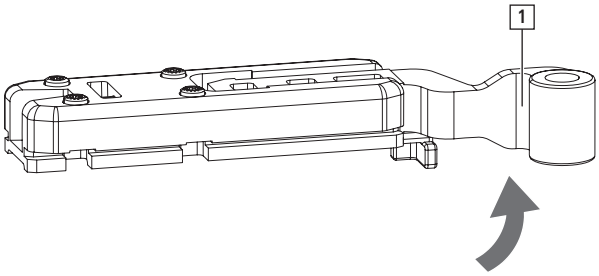

2. Turn the Turn-Only stay hinge 180°.

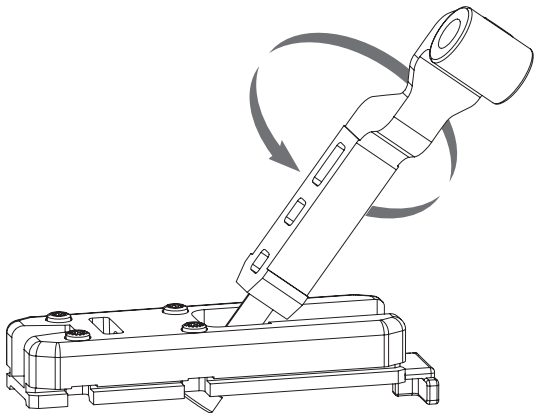

3. Fold the Turn-Only stay hinge back again.

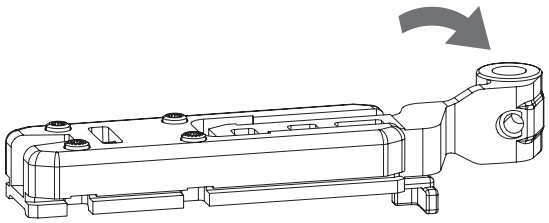

Installing the Turn-Only stay hinge

⇨ For elements with SH > 1300 mm, insert the clamping support-strip for the central hinge.

1301 – 1800	1
1801 – 2400	2
> 2400	3

1. Insert the Turn-Only stay hinge into the sash groove as far as it will go at the top on the hinge side.

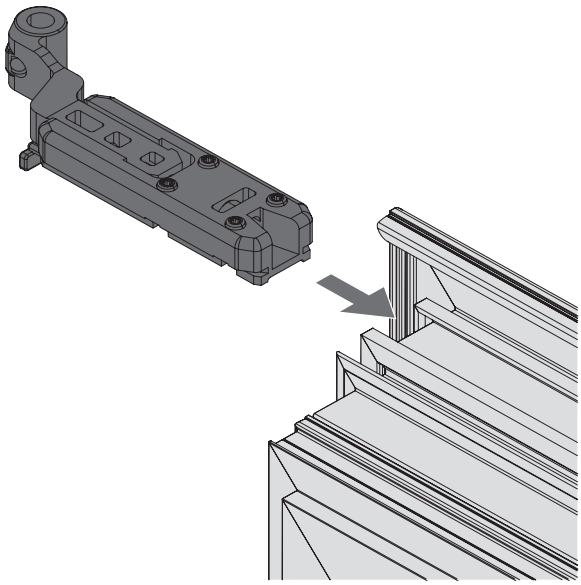

2. Secure the Turn-Only stay hinge in position with four piercing screws.

   Tool: T10 hexalobular socket

   Torque: 2 – 2.5 Nm

   Check that the hinge is fitted securely.

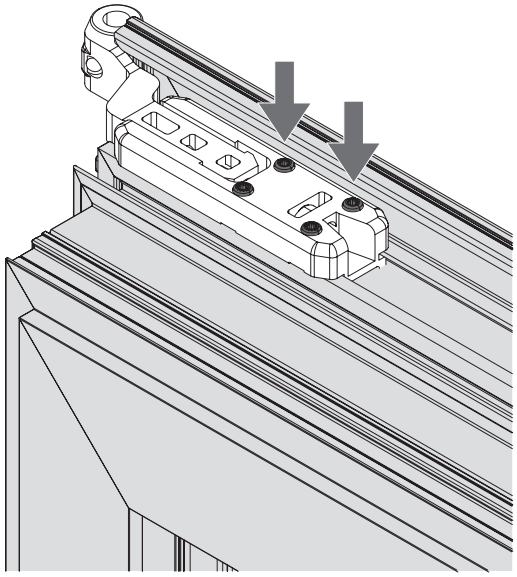

8.6.2.9 Turn-Only hinge | 200 kg

Installing the Turn-Only hinge

⇨ For elements with SH > 1300 mm, insert the clamping support-strip for the central hinge.

1. Insert the clamping block (aligned as shown) into the top of the sash groove, starting from the hinge side.

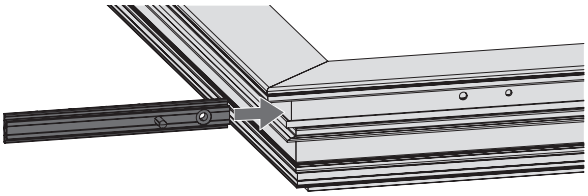

INFO
Do not leave a gap between the clamping block and profile. The clamping block must be positioned securely on the profile without any gaps.

2. Screw down the clamping block [A] and join it to the sash to produce a form-fitting connection by driving in the slotted pin [B].

   Tool: T25 hexalobular socket, hammer

   Torque: 3.5 – 5.0 Nm

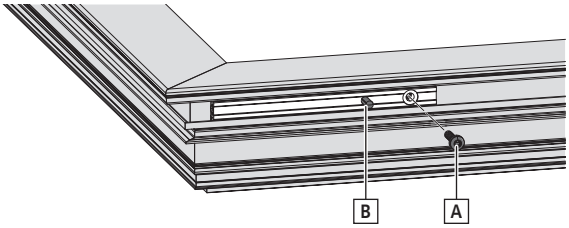

3. Insert bushes into the hinge.

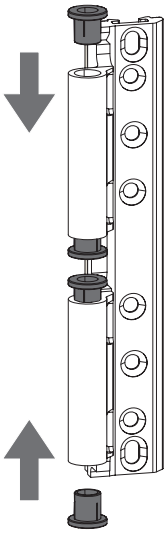

4. Insert the clamping support-strip into the sash groove at the top on the hinge side.

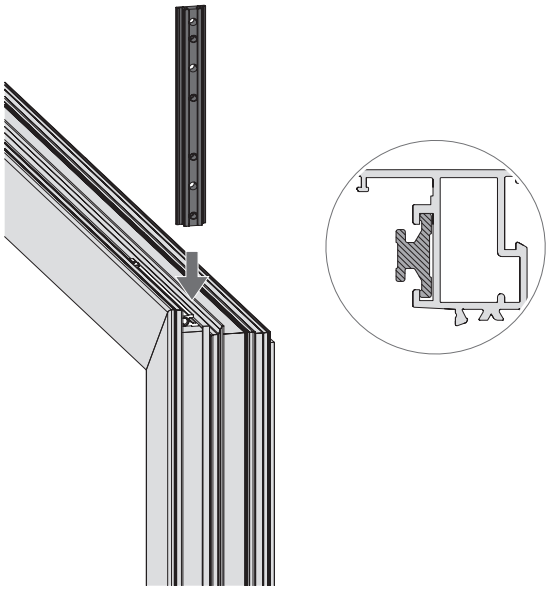

5. Use screws to fasten the hinge to the clamping block and clamping support-strip in the sash.
   [1] Countersunk screw M5 x 40
   [2] Countersunk screw M5 x 10
   [3] Optional: self-tapping screw ST4.8 x 25
   Tool: T25 hexalobular socket
   Torque: 3.5 – 5.0 Nm
   Check that the hinge is fitted securely.

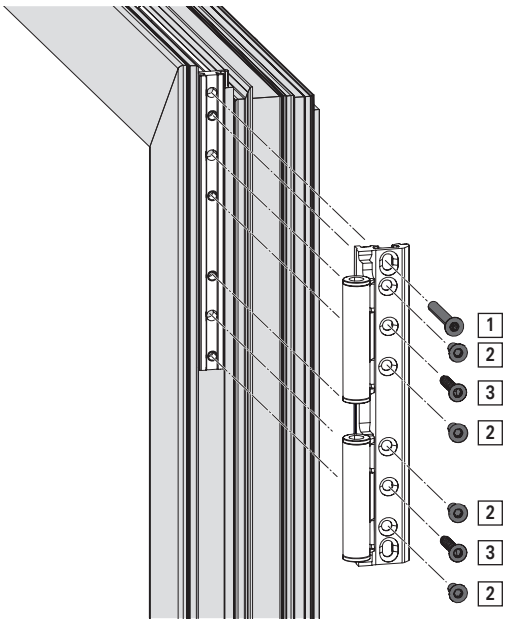

8.6.2.10 Turn-Only hinge | 300 kg

Installing the Turn-Only hinge

1. Insert the clamping block (aligned as shown) into the top of the sash groove, starting from the hinge side.

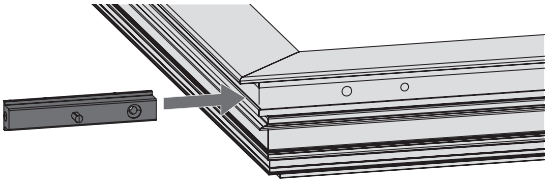

> **INFO**
> Do not leave a gap between the clamping block and profile. The clamping block must be positioned securely on the profile without any gaps.

2. Screw down the clamping block [A] and join it to the sash to produce a form-fitting connection by driving in the slotted pin [B].

   Tool: T25 hexalobular socket, hammer

   Torque: 3.5 – 5.0 Nm

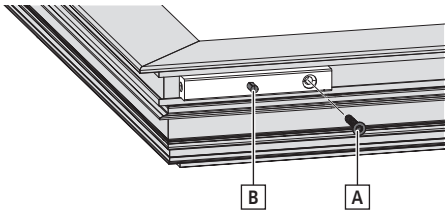

3. Insert bushes into the hinge.

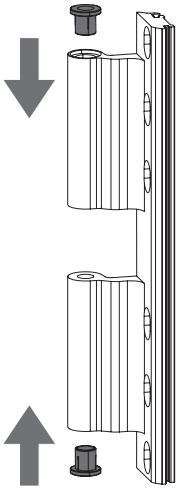

4. Insert the Turn-Only hinge into the sash groove at the top on the hinge side.

> **INFO**
> When using a central hinge, install the CL hinge first.

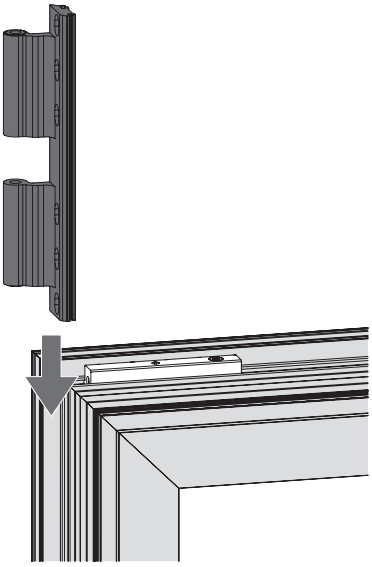

5. Use screws to fasten the hinge to the clamping block in the sash.
   [1] Countersunk screw M5 x 40
   [2] Self-tapping screw ST4.8 x 25
   Tool: T25 hexalobular socket
   Torque: 3.5 – 5.0 Nm
   Check that the hinge is fitted securely.

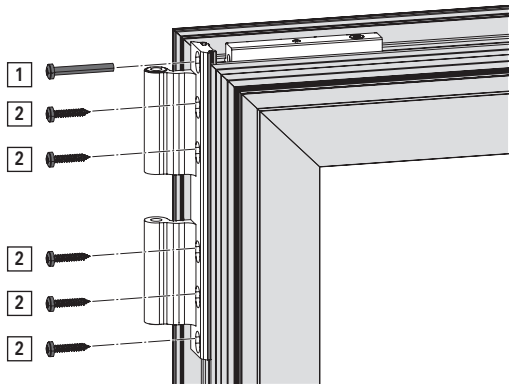

8.6.2.11 CL sash component

Installing the CL sash component

1. Insert the CL sash component into the sash groove on the hinge side.

2. Fasten the CL sash component with a preassembled threaded pin.
   Tool: T10 hexalobular socket
   Torque: 2 – 2.5 Nm

8.6.2.12 Locking sleeve

Installing the locking sleeve

1. Produce the espagnolette lock by using a locking sleeve in the slot on connecting rod CR2.

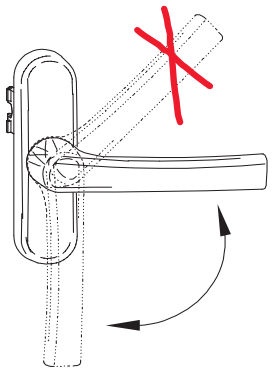

2. Produce the slot in connecting rod CR2 before installation [A].

INFO
X = freely positionable (suggestion: 60 mm)

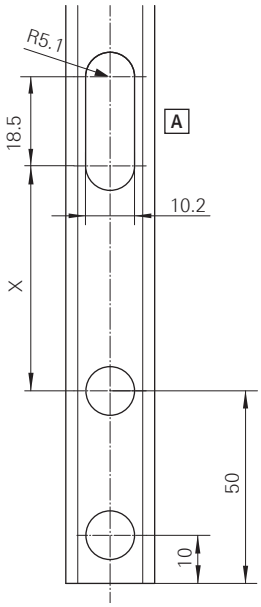

3. Drill out the sash in the 90° handle position [B] for locking sleeve with screw [C].
   Drill the hole:
   1 x Ø 3.5 mm; at least 4 mm deep.

4. Fasten the locking sleeve [1] with the screw [2].
   Tool: T25 hexalobular socket

8.6.2.13 Sash lifter | 200 kg

Installing the sash lifter

1. Place the run-up block [1] on the coupler component [2]. Connect the coupler component to the connecting rod [3] and the corner drive for the sash lifter [4] and insert into the sash profile.

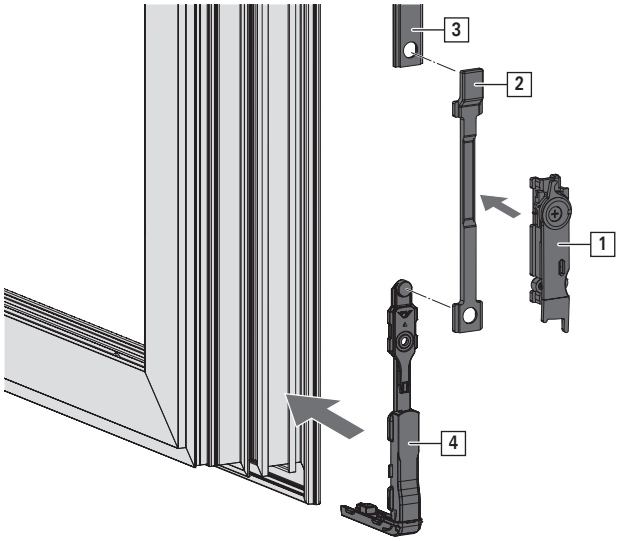

2. Secure the corner drive to the sash using the retaining fork.

INFO
Do not fix the run-up block in place until the sash is connected to the frame and the run-up block is aligned in its final position.

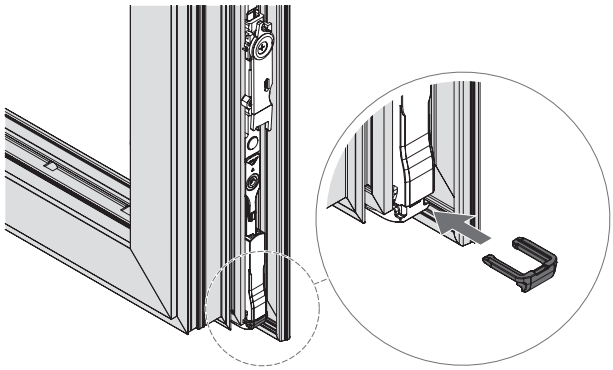

8.6.3 Frame

INFO
Install the frame components when the frame is horizontal (workshop).

Once the frame is fitted, the reveal may prevent frame components from being installed correctly.

8.6.3.1 CD hinge | 50 kg: frame component (bearing)

Installing the top bearing

1. Position the bearing.
   The clamp strip must engage in the frame groove.

   INFO
   Do not leave a gap between the bearing and profile. The bearing must be positioned securely on the profile without any gaps.

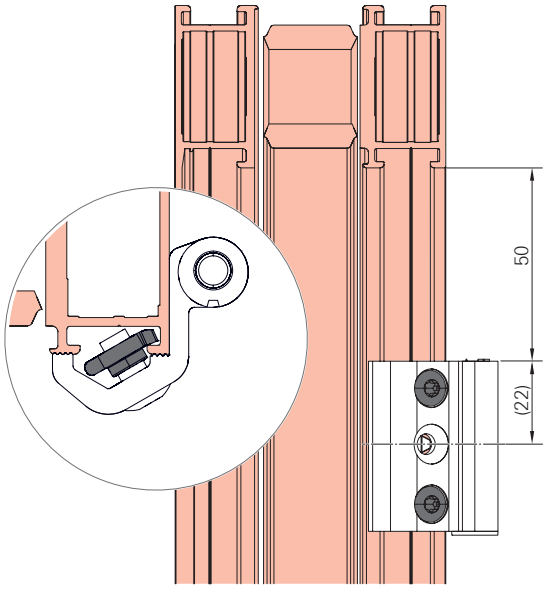

2. Push the bearing onto the profile so that it is level and fasten with two preassembled screws.
   Tool: T25 hexalobular socket
   Torque: 4.5 – 6.0 Nm
   Check that the bearing is fitted securely.

Installing the bottom bearing

1. Position the bearing.
   The clamp strip must engage in the frame groove.

> **INFO**
> Do not leave a gap between the bearing and profile. The bearing must be positioned securely on the profile without any gaps.

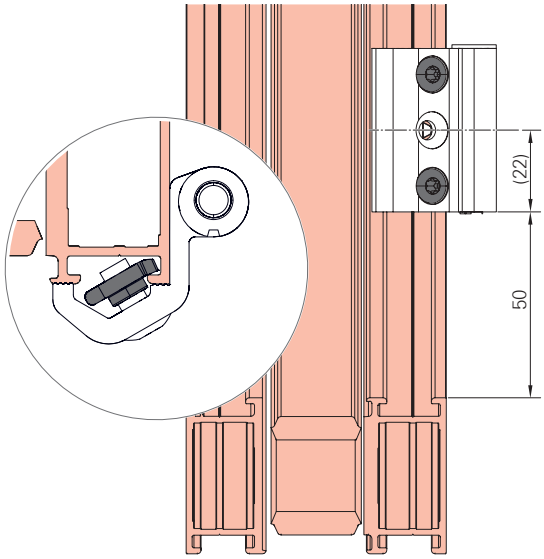

2. Push the bearing onto the profile so that it is level and fasten with two preassembled screws.
   Tool: T25 hexalobular socket
   Torque: 4.5 – 6.0 Nm
   Check that the bearing is fitted securely.

3. Insert the pin into the Turn-Only hinge bush from above and push downwards.

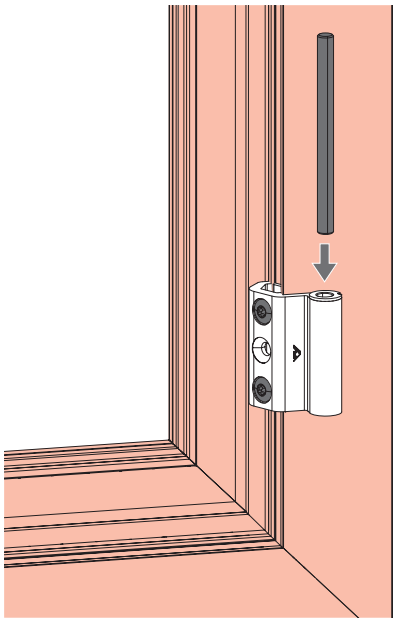

Installing the central bearing

1. Position the bearing depending on the SH (see installation drawing → *from page 455*).
   The clamp strip must engage in the frame groove.

INFO
Do not leave a gap between the bearing and profile. The bearing must be positioned securely on the profile without any gaps.

2. Push the bearing onto the profile so that it is level and fasten with two preassembled screws.
   Tool: T25 hexalobular socket
   Torque: 4.5 – 6.0 Nm
   Check that the bearing is fitted securely.

3. Insert the pin into the Turn-Only hinge bush from above and push downwards.

8.6.3.2 CD hinge | 80 kg or 100 kg: frame component (bearing)

INFO
Figures: CD hinge | 100 kg.
Installation is identical for the CD hinge | 80 kg.

Installing the top bearing

⇨ The frame must be predrilled for the additional screw → *8.6.1.3 "CD hinge | 80 kg or 100 kg" from page 336*.

1. Position the bearing according to weight:
   CD hinge | 80 kg: X = 106 mm; Y = 27 mm
   CD hinge | 100 kg: X = 116.5 mm; Y = 31.8 mm
   The clamp strip must engage in the frame groove.

   INFO
   Do not leave a gap between the bearing and profile. The bearing must be positioned securely on the profile without any gaps.

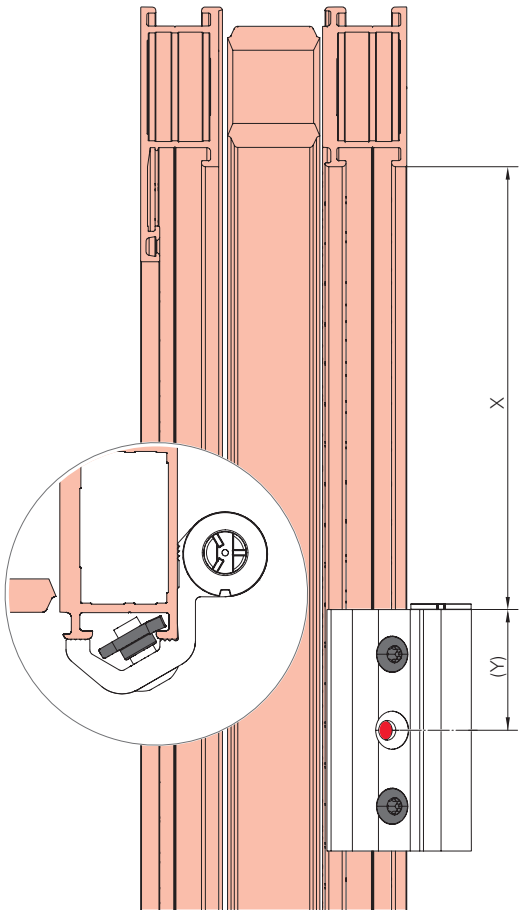

2. Push the bearing onto the profile so that it is level and fasten with two preassembled screws.
   Tool: T25 hexalobular socket

Torque: 4.5 – 6.0 Nm

3. Insert the pin [1] into the Turn-Only hinge bush from above and push downwards.
   Fasten the bearing to the frame with one additional screw [2].
   Tool: T25 hexalobular socket
   Torque: 1.5 – 2.0 Nm
   Check that the bearing is fitted securely.

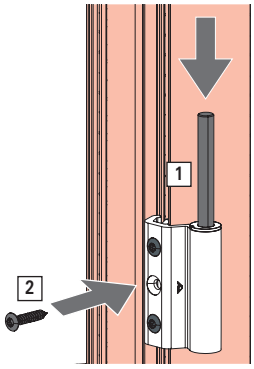

Installing the bottom bearing

⇨ The frame must be predrilled for the additional screw → *8.6.1.3 "CD hinge | 80 kg or 100 kg" from page 336*.

1. Position the bearing.
   CD hinge | 80 kg: Y = 27 mm
   CD hinge | 100 kg: Y = 31.8 mm
   The clamp strip must engage in the frame groove.

INFO
Do not leave a gap between the bearing and profile. The bearing must be positioned securely on the profile without any gaps.

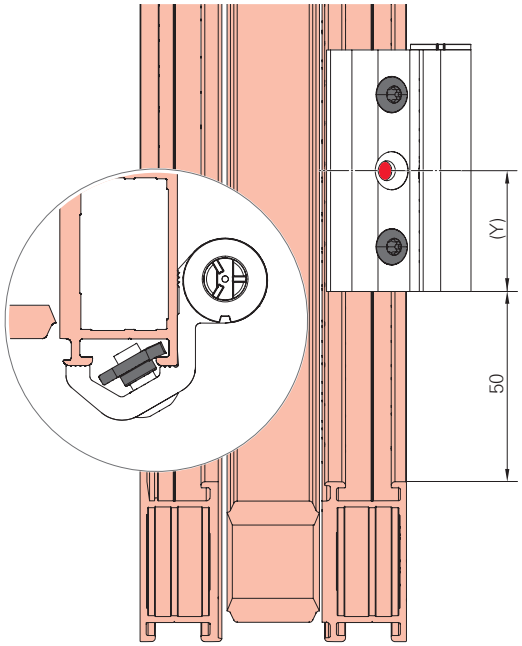

2. Push the bearing onto the profile so that it is level and fasten with two preassembled screws.
   Tool: T25 hexalobular socket
   Torque: 4.5 – 6.0 Nm

3. Insert the pin into the Turn-Only hinge bush from above and push downwards.
   Fasten the bearing using the additional screw.
   Tool: T25 hexalobular socket
   Torque: 1.5 – 2.0 Nm
   Check that the bearing is fitted securely.

Installing the central bearing

⇨ The frame must be predrilled for the additional screw → *8.6.1.3 "CD hinge | 80 kg or 100 kg" from page 336*.

1. Position the bearing depending on the SH (see installation drawing → *from page 455*).

The clamp strip must engage in the frame groove.

INFO
Do not leave a gap between the bearing and profile. The bearing must be positioned securely on the profile without any gaps.

2. Push the bearing onto the profile so that it is level and fasten with two preassembled screws.
   Tool: T25 hexalobular socket
   Torque: 4.5 – 6.0 Nm

3. Insert the pin into the Turn-Only hinge bush from above and push downwards.
   Fasten the bearing using the additional screw.
   Tool: T25 hexalobular socket
   Torque: 1.5 – 2.0 Nm
   Check that the bearing is fitted securely.

8.6.3.3 Pivot rest | 90 - 160 kg

Installing the pivot rest

1. Swing the bearing into the profile so that the clamp strip engages in the frame groove.

   Position the bearing flush in the corner.

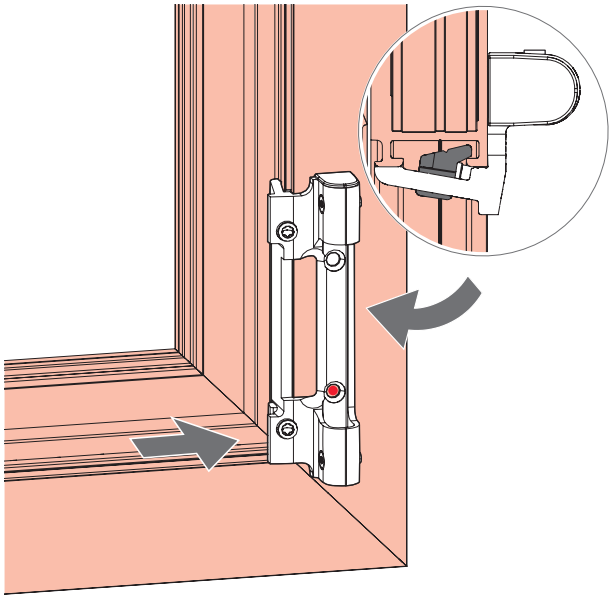

2. Push the bearing onto the profile so that it is level and fasten with preassembled screws [1].

   Tool: T25 hexalobular socket

   Torque: 3.5 – 5.0 Nm

   Check that the bearing is fitted securely.

INFO

- Do not leave a gap between the bearing and profile. The bearing must be positioned securely on the profile without any gaps. Follow the screwdriving sequence.
- Use an additional screw [2] for:

  SH > 2400 mm

  S.kg > 130 kg

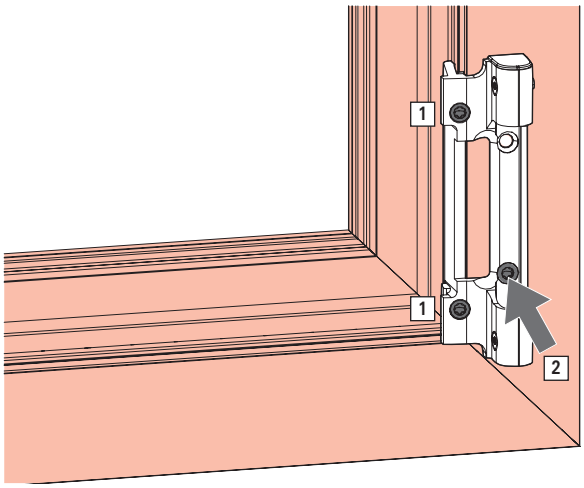

8.6.3.4 Pivot rest | 200 kg

Installing the pivot rest

1. Push the bearing on the predrilled frame onto the profile so that it is level and fasten with screws.

   Tool: T25 hexalobular socket

   Torque: 3.5 – 5.0 Nm

   Check that the bearing is fitted securely.

INFO

Do not leave a gap between the bearing and profile. The bearing must be positioned securely on the profile without any gaps.

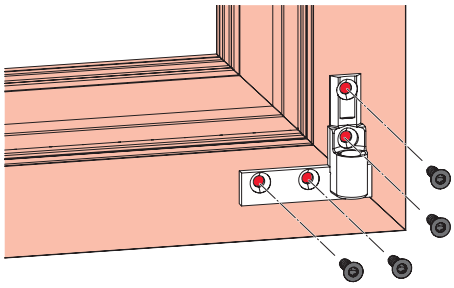

8.6.3.5 Pivot rest | 300 kg

Installing the pivot rest

1. Push the bearing on the predrilled frame onto the profile so that it is level and fasten with four screws [1].

   Tool: T25 hexalobular socket

   Torque: 3.5 – 5.0 Nm

2. Predrill the inside and fasten with two screws [2].

   Tool: T25 hexalobular socket

   Torque: 3.5 – 5.0 Nm

   Check that the bearing is fitted securely.

INFO
Do not leave a gap between the bearing and profile. The bearing must be positioned securely on the profile without any gaps.

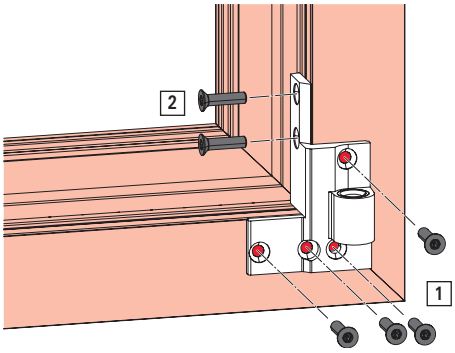

8.6.3.6 Fixing connecting-link | 90 - 130 kg

Installing the fixing connecting-link

1. Insert the fixing connecting-link [1] into the drilling jig [2] [A].

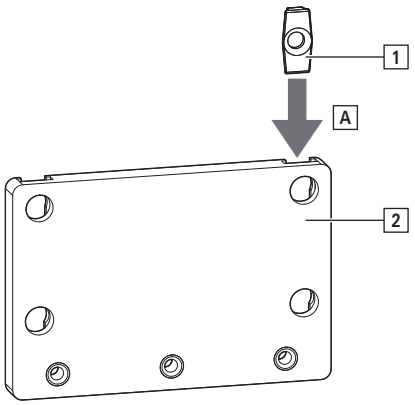

2. Push the drilling jig onto the profile so that it is level and position in the corner using cams.

   Install the fixing connecting-link through the drilling jig with a screw [B].

   Tool: T25 hexalobular socket

   Torque: 2 – 2.5 Nm

   Check that the fixing connecting-link is fitted securely.

   INFO
   Do not leave a gap between the fixing connecting-link and profile. The fixing connecting-link must be positioned securely on the profile without any gaps.

   With solid material, lubricate the screws.

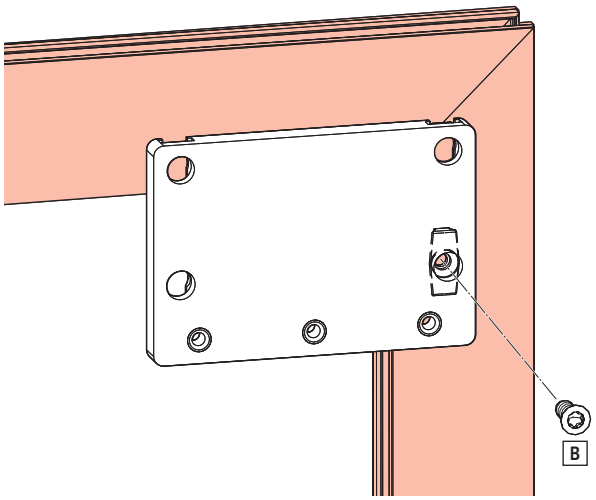

3. Remove the drilling jig by pulling it downwards [C].

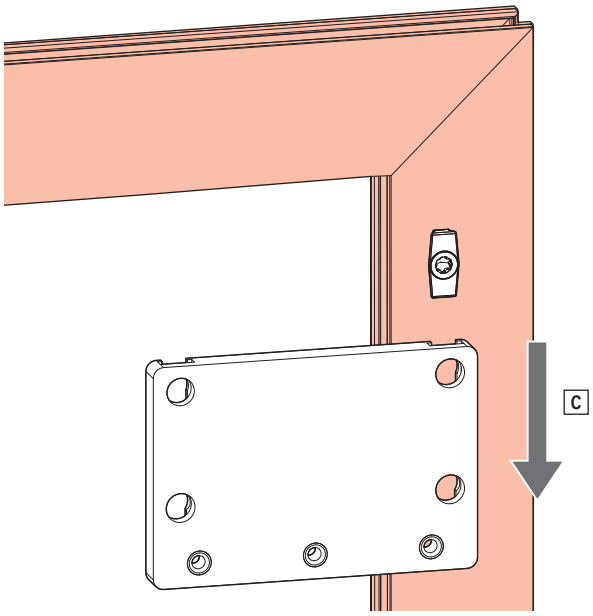

8.6.3.7 Fixing connecting-link | 160 kg

Installing the fixing connecting-link

1. Remove the preassembled fixing connecting-link from the counter bearing. Insert the fixing connecting-link [1] and the fixing connecting-link for the counter bearing [2] into the drilling jig [3] in the order shown [A].

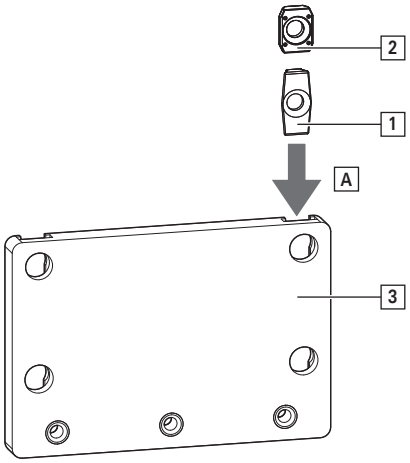

2. Push the drilling jig onto the profile so that it is level and position in the corner using cams.

   Install the fixing connecting-link through the drilling jig with screws [B].

   Tool: T25 hexalobular socket

   Torque: 2 – 2.5 Nm

   Check that the fixing connecting-link is fitted securely.

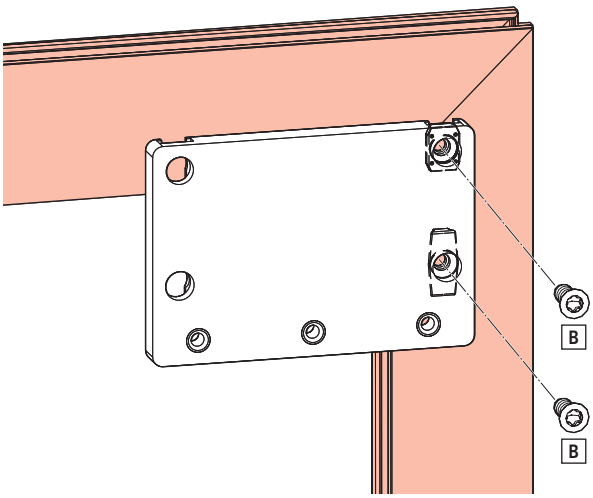

INFO

Do not leave a gap between the fixing connecting-link and profile. The fixing connecting-link must be positioned securely on the profile without any gaps.

With solid material, lubricate the screws.

3. Remove the drilling jig by pulling it downwards [C].

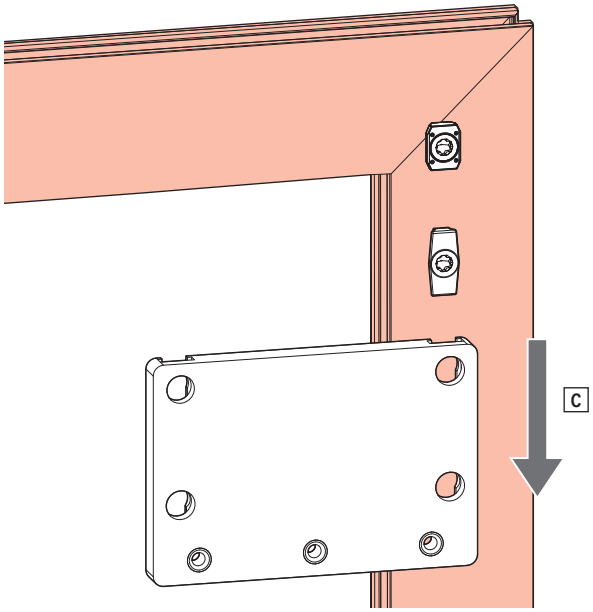

8.6.3.8 T-O bearing | 90 - 130 kg

Installing the T-O bearing

1. Swing the bearing into the profile so that the clamp strip engages in the frame groove.

2. Push the bearing onto the profile so that it is level and fasten with preassembled screws [1].

   Tool: T25 hexalobular socket

   Torque: 3.5 – 5.0 Nm

   Check that the bearing is fitted securely.

INFO

- Do not leave a gap between the bearing and profile. The bearing must be positioned securely on the profile without any gaps.
- Use an additional screw [2] for:

  S.kg ≥ 90 kg

  Tool: T25 hexalobular socket

  Torque: 3.5 – 5.0 Nm

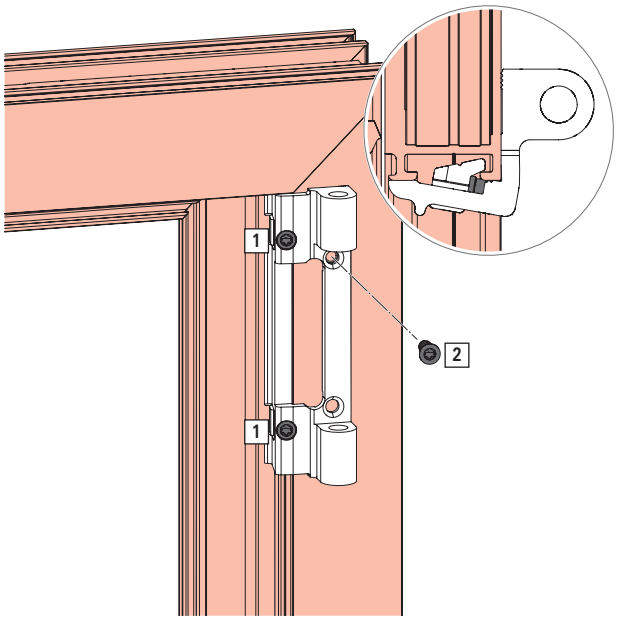

8.6.3.9 Stay bearing | 90 - 130 kg

Installing the stay bearing

1. Swing the bearing into the profile so that the clamp strip engages in the frame groove.

   Slide the bearing onto the fixing connecting-link. While doing so, ensure that the clamp strip lies on the frame groove without any gaps [A].

   INFO
   Only slide the bearing into position by hand to avoid damaging the paintwork.

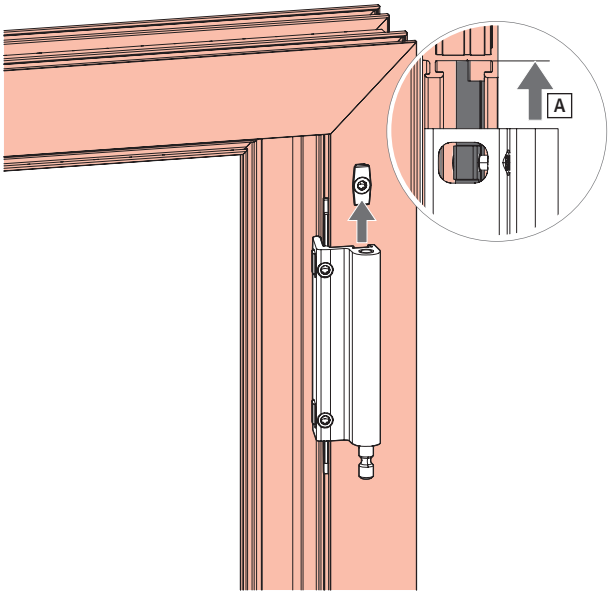

2. Push the bearing onto the profile so that it is level and fasten with preassembled screws.

   Tool: T25 hexalobular socket

   Torque: 3.5 – 5.0 Nm

   Check that the bearing is fitted securely.

   INFO
   Do not leave a gap between the fixing connecting-link and profile. The fixing connecting-link must be positioned securely on the profile without any gaps.

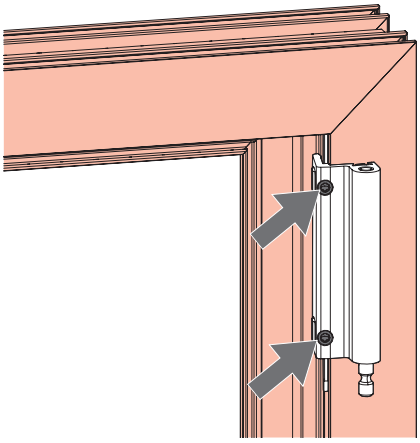

8.6.3.10 Stay bearing | 160 kg

Installing the stay bearing

1. Swing the bearing into the profile so that the clamp strip engages in the frame groove.

   Slide the bearing onto the fixing connecting-link. While doing so, ensure that the clamp strip lies on the frame groove without any gaps [A].

INFO
Only slide the bearing into position by hand to avoid damaging the paintwork.

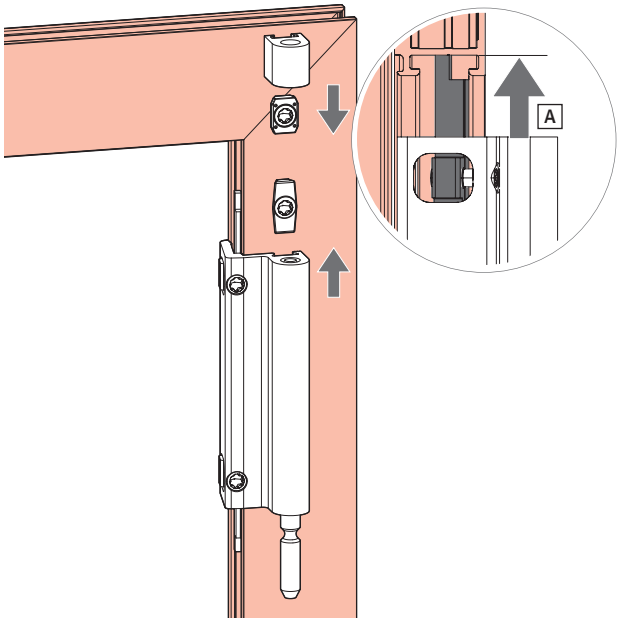

2. Slide the counter bearing onto the fixing connecting-link so that it locks in place.

3. Push the bearing onto the profile so that it is level and fasten with preassembled screws.

   Tool: T25 hexalobular socket

   Torque: 3.5 – 5.0 Nm

   Check that the bearing is fitted securely.

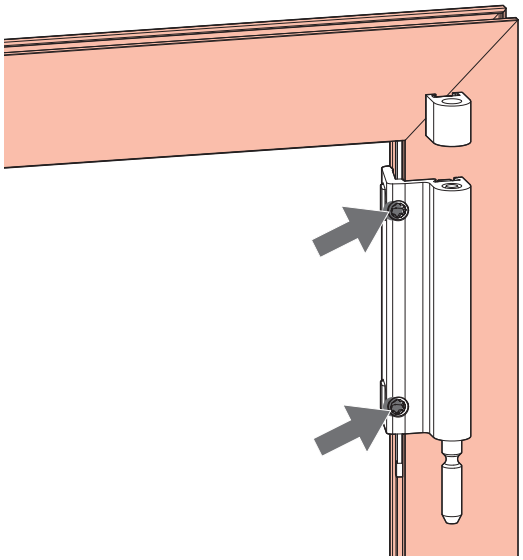

8.6.3.11 Stay bearing | 200 kg

Installing the stay bearing

1. Push the bearing onto the profile so that it is level and fasten with six screws.
   Tool: T25 hexalobular socket
   Torque: 3.5 – 5.0 Nm
   Check that the bearing is fitted securely.

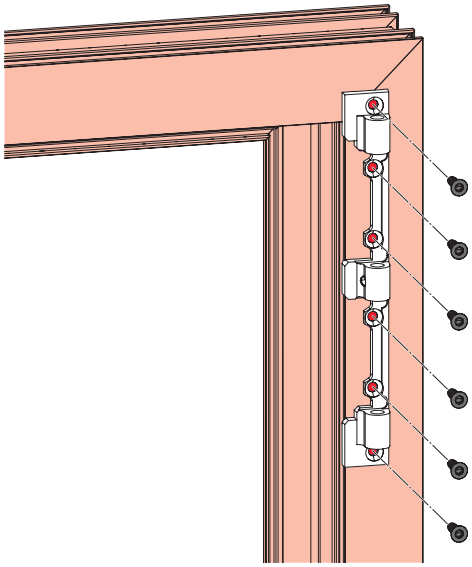

8.6.3.12 Stay bearing | 300 kg

Installing the stay bearing

1. Push the bearing onto the profile so that it is level and fasten with screws.
   8 x countersunk screw M5 x 16 [1]
   3 x countersunk screw M5 x 20 [2]
   Tool: T10 hexalobular socket
   Torque: 3.5 – 5.0 Nm
   Check that the bearing is fitted securely.

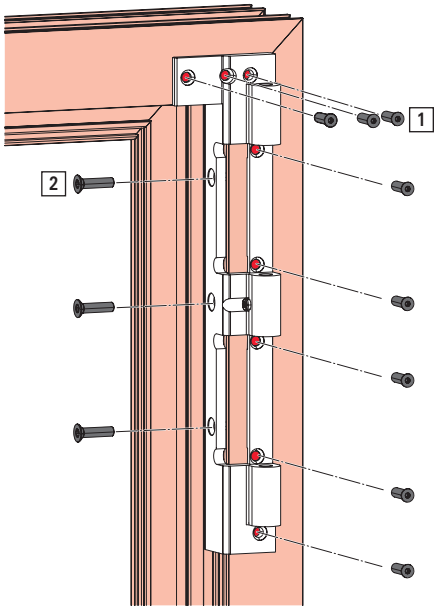

8.6.3.13 CL frame component

Installing the CL frame component

1. Swing the CL frame component into the profile on the hinge side.

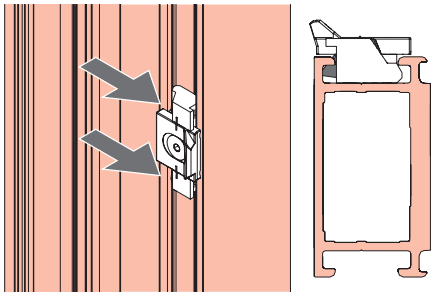

2. Screw down the CL frame component with two preassembled threaded pins.

   Tool: T10 hexalobular socket

   Torque: 2 – 2.5 Nm

8.6.3.14 Sash lifter stop | 200 - 300 kg

Installing the sash lifter stop

1. Swing the stop into the profile on the locking side.

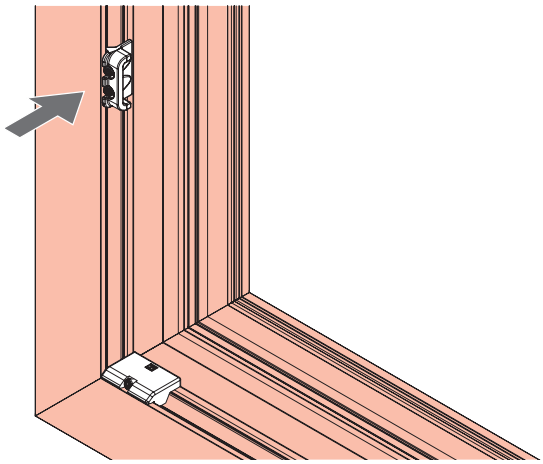

2. Fasten the stop with preassembled threaded pins.

   Tool: T10 hexalobular socket

   Torque: 2 – 2.5 Nm

8.6.4 Joining the sash and frame

WARNING

Heavy loads pose the risk of injury and property damage.

Lifting and carrying heavy loads in an uncontrolled manner may lead to physical injury and property damage.

- Transport and installation must be carried out by at least two people.
- Use transportation means. → *14 "Transport" from page 517*

8.6.4.1 CD hinge | 50 kg

1. Move the handle to the turn position.

2. Guide the sash straight along the frame in a downwards direction until the pin [1] is fully inserted in the bottom hinge [2].

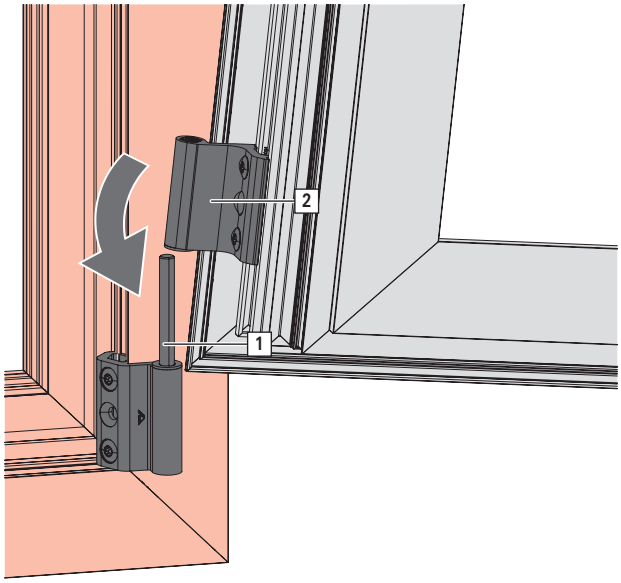

3. Align the top sash with the preassembled hinge [3] beneath the frame bearing [4].

   Undo two screws [5] on the top hinge and push the hinge and pin upwards.

   INFO

   From SH > 1300 mm also undo the screws on the central hinge, mount the hinge and push it downwards as far as the bearing stop.

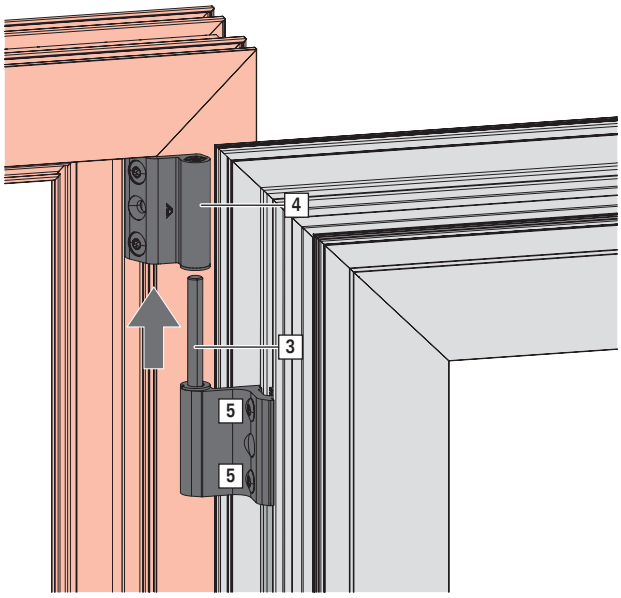

4. Push the hinge onto the profile so that it is level and fasten with two preassembled screws [6].
   Tool: T25 hexalobular socket
   Torque: 4.5 – 6.0 Nm
   Check that the hinge is fitted securely.

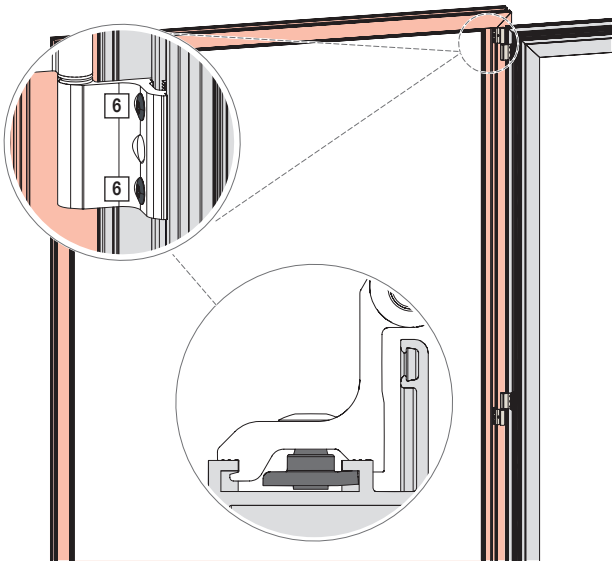

8.6.4.2 CD hinge | 80 kg or 100 kg

1. Move the handle to the turn position.

2. Guide the sash straight along the frame in a downwards direction until all hinges [1] are mounted in all bearings with pin [2].

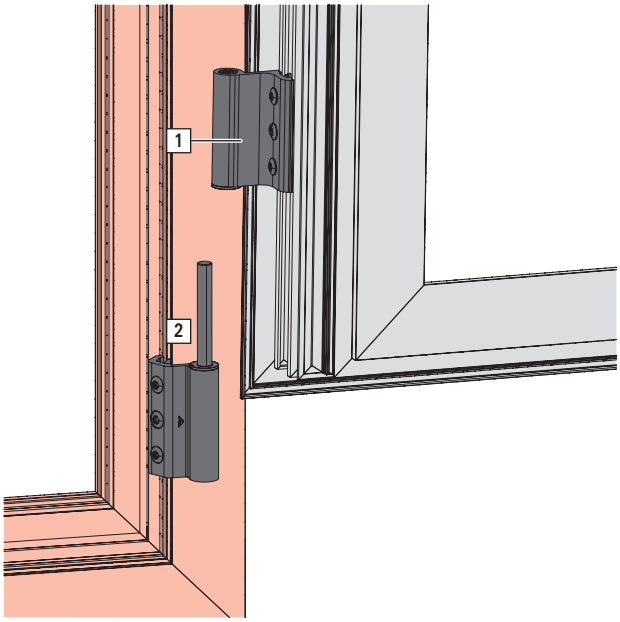

8.6.4.3 T-O hinge side | 90 - 130 kg

1. Move the handle to the turn position.

2. With the sash slightly tilted inwards, guide it along the frame in a downwards direction [A] until you feel the hinge engage in the bearing [B].

INFO
The frame grooves and sash grooves, as well as the components installed in them, must be free from component residues.

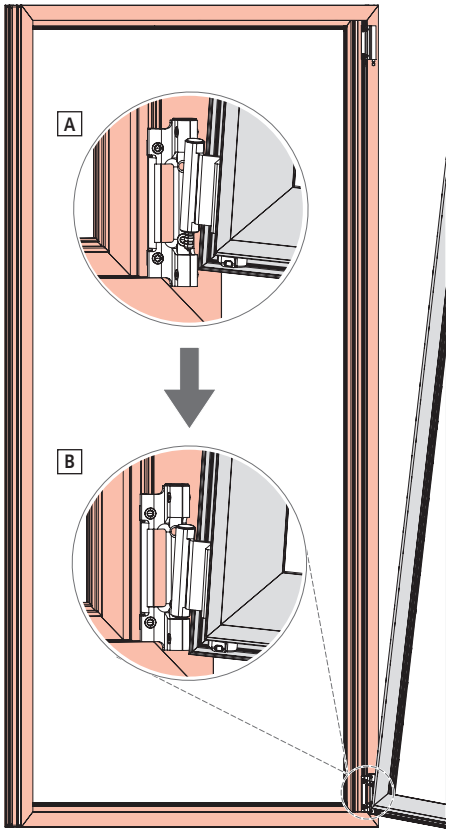

3. Insert the sash with hinge between the bearings.

4. Insert the pin from below and push it upwards.
   Check that the pin is seated flush with the bearing.

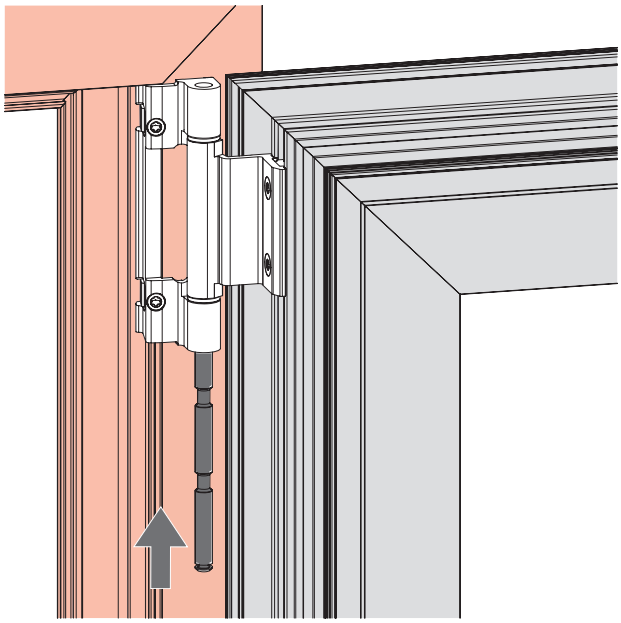

Central hinge 90 - 160 kg

⇨ The clamping support-strip must be inserted into the sash before the T-O hinge / Turn-Only stay hinge is installed.

1301 – 1800	1
1801 – 2400	2
> 2400	3

1. Open the window sash.

2. Position the central hinge (bearing and hinge preassembled) in accordance with the installation drawing. Swing the central hinge on the frame side into the profile so that the clamp strip engages in the frame groove.

3. Push the bearing onto the profile so that it is level and fasten with preassembled screws.
   Tool: T25 hexalobular socket
   Torque: 3.5 – 5.0 Nm

   INFO
   Do not leave a gap between the bearing and profile. The bearing must be positioned securely on the profile without any gaps.

4. Open the hinge and push it onto the profile on the hinge side so that it is level. Push the clamping support-strip behind it and fasten with two screws.
   Tool: T25 hexalobular socket
   Torque: 3.5 – 5.0 Nm

   INFO
   Do not leave a gap between the hinge and profile. The hinge must be positioned securely on the profile without any gaps.

8.6.4.4 T-O-C hinge side | 90 - 130 kg

1. Move the handle to the turn position.

2. With the sash slightly tilted inwards, guide it along the frame in a downwards direction [A] until you feel the hinge engage in the bearing [B].

INFO
The frame grooves and sash grooves, as well as the components installed in them, must be free from component residues.

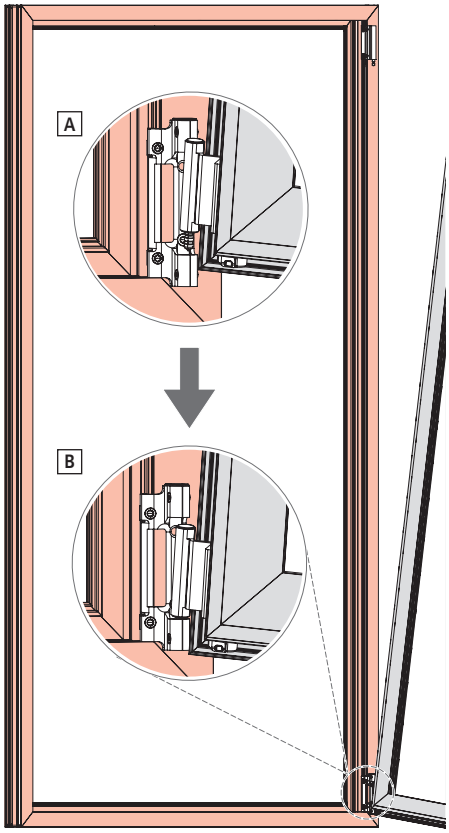

3. Position the sash with Turn-Only stay hinge above the bearing.

4. Push the preassembled pin upwards [C].

5. Screw the preassembled threaded pin fully (i.e. as far as it will go) into the Turn-Only stay hinge to secure the pin [D].
   Tool: T10 hexalobular socket
   Torque: 2 – 2.5 Nm
   Check that the hinge is fitted securely.

WARNING
An unsecured sash may pose a risk of death!
The sash may fall if the pin joining the bearing and the hinge is not secure.
- Check that the pin is seated flush with the bearing.
- Check that the threaded pin is flush with the stay hinge [E].
  The threaded pin must not protrude.

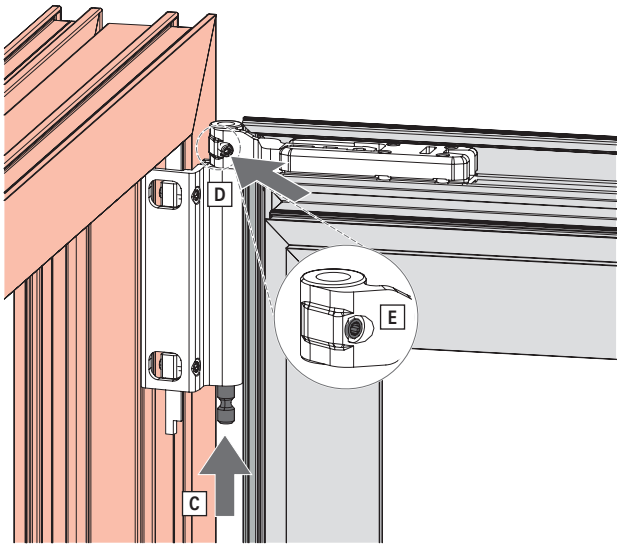

Central hinge 90 - 160 kg

⇨ The clamping support-strip must be inserted into the sash before the T-O hinge / Turn-Only stay hinge is installed.

1301 – 1800	1
1801 – 2400	2
> 2400	3

1. Open the window sash.

2. Position the central hinge (bearing and hinge preassembled) in accordance with the installation drawing. Swing the central hinge on the frame side into the profile so that the clamp strip engages in the frame groove.

3. Push the bearing onto the profile so that it is level and fasten with preassembled screws.
   Tool: T25 hexalobular socket
   Torque: 3.5 – 5.0 Nm

   INFO
   Do not leave a gap between the bearing and profile. The bearing must be positioned securely on the profile without any gaps.

4. Open the hinge and push it onto the profile on the hinge side so that it is level. Push the clamping support-strip behind it and fasten with two screws.
   Tool: T25 hexalobular socket
   Torque: 3.5 – 5.0 Nm

   INFO
   Do not leave a gap between the hinge and profile. The hinge must be positioned securely on the profile without any gaps.

8.6.4.5 T-O-C hinge side | 160 kg

1. Move the handle to the turn position.

2. With the sash slightly tilted inwards, guide it along the frame in a downwards direction [A] until you feel the hinge engage in the bearing [B].

INFO
The frame grooves and sash grooves, as well as the components installed in them, must be free from component residues.

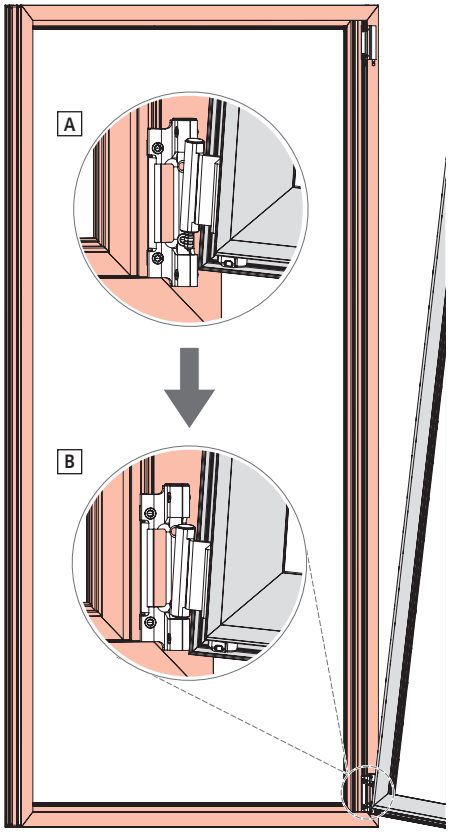

3. Insert the sash with the Turn-Only stay hinge between the counter bearing and bearing.

4. Push the preassembled pin upwards [C].

INFO
Dispose of the retaining sleeve that falls out [D].

5. Screw the preassembled threaded pin fully (i.e. as far as it will go) into the Turn-Only stay hinge to secure the pin [E].

   Tool: T10 hexalobular socket

   Torque: 2 – 2.5 Nm

   Check that the hinge is fitted securely.

WARNING
An unsecured sash may pose a risk of death!
The sash may fall if the pin joining the bearing and the hinge is not secure.
- Check that the pin is seated flush with the bearing.
- Check that the threaded pin is flush with the stay hinge [F].

  The threaded pin must not protrude.

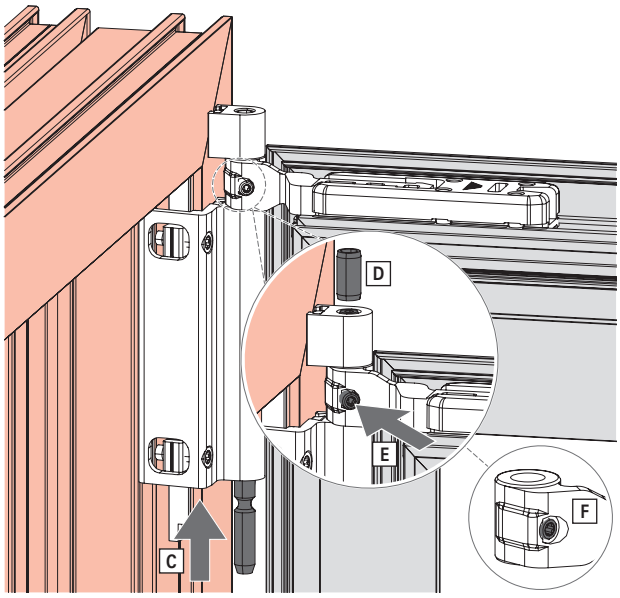

Central hinge 90 - 160 kg

⇨ The clamping support-strip must be inserted into the sash before the T-O hinge / Turn-Only stay hinge is installed.

↕	🛒
1301 – 1800	1
1801 – 2400	2
> 2400	3

1. Open the window sash.

2. Position the central hinge (bearing and hinge preassembled) in accordance with the installation drawing. Swing the central hinge on the frame side into the profile so that the clamp strip engages in the frame groove.

3. Push the bearing onto the profile so that it is level and fasten with preassembled screws.

   Tool: T25 hexalobular socket

   Torque: 3.5 – 5.0 Nm

INFO
Do not leave a gap between the bearing and profile. The bearing must be positioned securely on the profile without any gaps.

4. Open the hinge and push it onto the profile on the hinge side so that it is level. Push the clamping support-strip behind it and fasten with two screws.

   Tool: T25 hexalobular socket

   Torque: 3.5 – 5.0 Nm

INFO
Do not leave a gap between the hinge and profile. The hinge must be positioned securely on the profile without any gaps.

8.6.4.6 T-O hinge side | 200 kg

1. Move the handle to the turn position.

2. With the sash slightly tilted inwards, guide it along the frame in a downwards direction [A] until you feel the hinge [1] engage in the bearing [2] [B].

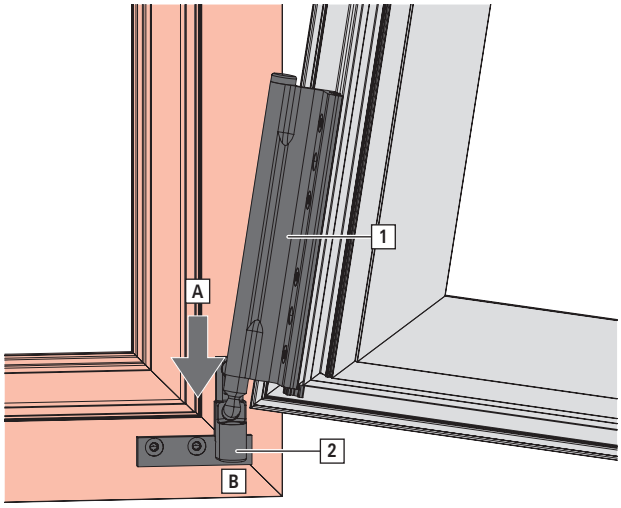

3. Insert the sash with hinge between the bearings.

INFO
The frame grooves and sash grooves, as well as the components installed in them, must be free from component residues.

4. Insert the pin from below and push it upwards.

5. Screw the preassembled threaded pin [3] fully (i.e. as far as it will go) into the bearing to secure the pin.
   Tool: T10 hexalobular socket
   Torque: 2 – 2.5 Nm
   Check that the hinge is fitted securely.

WARNING
An unsecured sash may pose a risk of death!
The sash may fall if the pin joining the bearing and the hinge is not secure.
- Check that the pin is seated flush with the bearing.
- Check that the threaded pin is flush with the stay hinge [C].
  The threaded pin must not protrude.

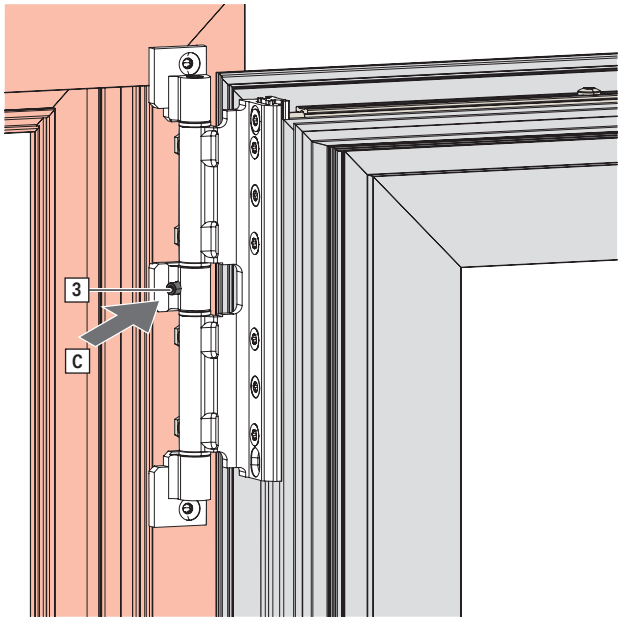

T-O central hinge | 200 kg

⇨ The clamping support-strip must be inserted into the sash before the Turn-Only hinge is installed.

1. Open the window sash.

2. Position the CL T-O bearing in accordance with the installation drawing.

3. Push the bearing onto the profile so that it is level and fasten with four screws.
   Tool: T25 hexalobular socket
   Torque: 3.5 – 5.0 Nm

INFO
Do not leave a gap between the bearing and profile. The bearing must be positioned securely on the profile without any gaps.

4. Insert bushes into the hinge.

5. Push the hinge onto the profile so that it is level and position it so that it is aligned with the bearing.
   Push the clamping support-strip behind it and fasten with four screws.

6. Insert the sash with hinge between the bearings.

7. Insert the T-O bearing pin from below and push it upwards.

8. Tighten the fixed screws.
   Tool: T25 hexalobular socket
   Torque: 3.5 – 5.0 Nm

INFO
Do not leave a gap between the hinge and profile. The hinge must be positioned securely on the profile without any gaps.

8.6.4.7 T-O hinge side | 300 kg

1. Move the handle to the turn position.

2. With the sash slightly tilted inwards, guide it along the frame in a downwards direction [A] until you feel the hinge [1] engage in the bearing [2] [B].

INFO
The frame grooves and sash grooves, as well as the components installed in them, must be free from component residues.

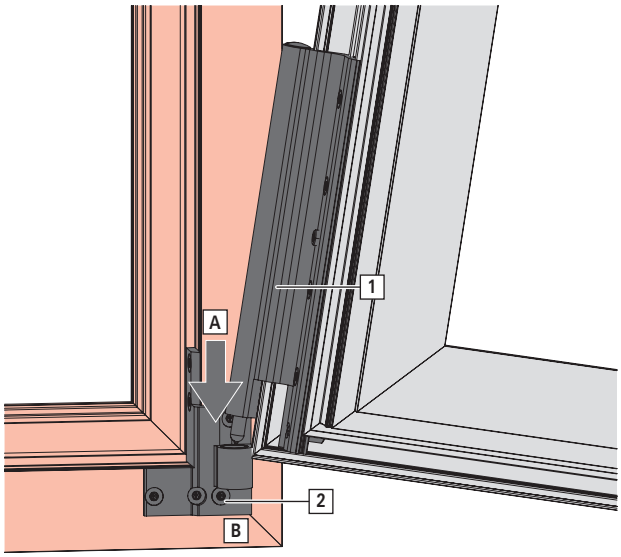

3. Insert the sash with hinge between the bearings.

4. Insert the pin [3] from below and push it upwards.

5. Screw the preassembled threaded pin [4] fully (i.e. as far as it will go) into the hinge to secure the pin.
   Tool: T10 hexalobular socket
   Check that the hinge is fitted securely.

WARNING
An unsecured sash may pose a risk of death!
The sash may fall if the pin joining the bearing and the hinge is not secure.
- Check that the pin is seated flush with the bearing.
- Check that the threaded pin is flush with the stay hinge [C].
  The threaded pin must not protrude.

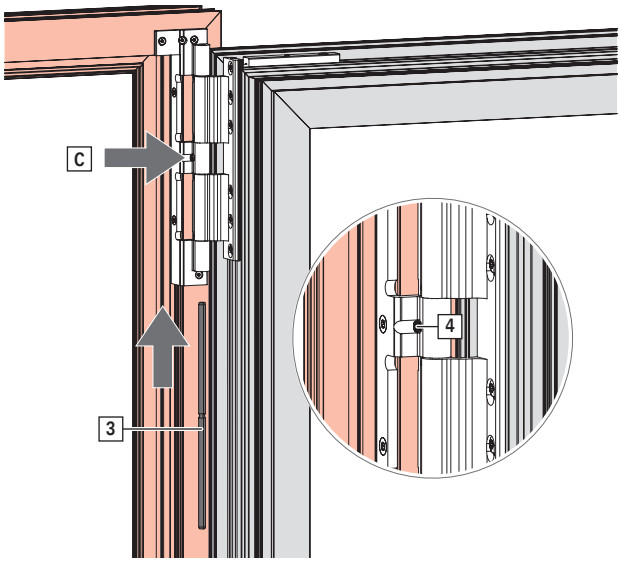

T-O central hinge | 300 kg

⇨ The clamping support-strip must be inserted into the sash before the T-O hinge is installed.

⇨ Drill holes for the CL hinge and CL bearing must be present.

1. Open the window sash.

2. Position the CL bearing in accordance with the installation drawing.

3. Push the bearing onto the profile so that it is level and fasten with seven screws.
   Tool: T25 hexalobular socket
   Torque: 3.5 – 5.0 Nm

INFO
Do not leave a gap between the bearing and profile. The bearing must be positioned securely on the profile without any gaps.

4. Insert bushes into the hinge.

5. Push the hinge onto the profile so that it is level and position it so that it is aligned with the bearing.

6. Insert the sash with hinge between the bearings.

7. Insert the T-O bearing pin from below and push it upwards.

8. Tighten the fixed screws.
   Tool: T25 hexalobular socket
   Torque: 3.5 – 5.0 Nm

9. Screw the preassembled threaded pin fully (i.e. as far as it will go) into the bearing to secure the pin.
   Tool: T10 hexalobular socket
   Torque: 2 – 2.5 Nm

INFO
Do not leave a gap between the hinge and profile. The hinge must be positioned securely on the profile without any gaps.

8.6.4.8 Sash lifter run-up block, complete | 200 - 300 kg

Fixing the sash lifter run-up block, complete, into position

1. Move the run-up block [1] onto the coupler component [2] so that the sash is raised slightly when the lift arm lies on the stop [A].

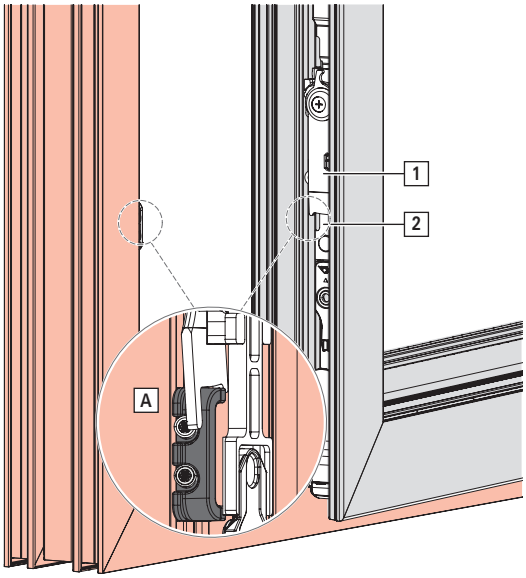

2. Fasten the run-up block with preassembled threaded pins [B].

   Tool: T10 hexalobular socket

   Torque: 2 – 2.5 Nm

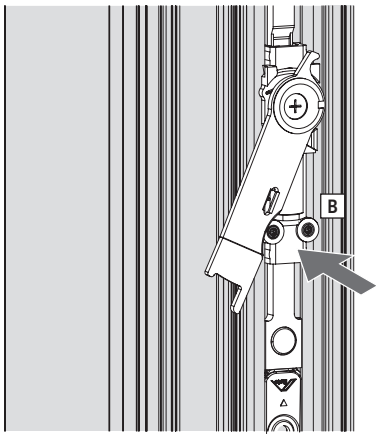

8.7 Tilt-Only hardware

8.7.1 Sash

8.7.1.1 T-O hinge | 90 kg

Installing the T-O hinge

1. Insert the T-O hinge in the profile and put it into position.

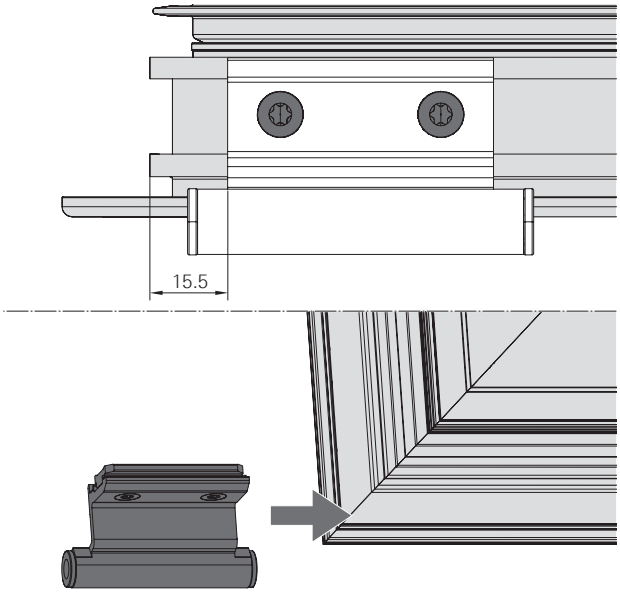

2. Push the T-O hinge onto the profile so that it is level and fasten with preassembled screws [1].
   Tool: T25 hexalobular socket
   Torque: 3.5 – 5.0 Nm
   Check that the hinge is fitted securely.

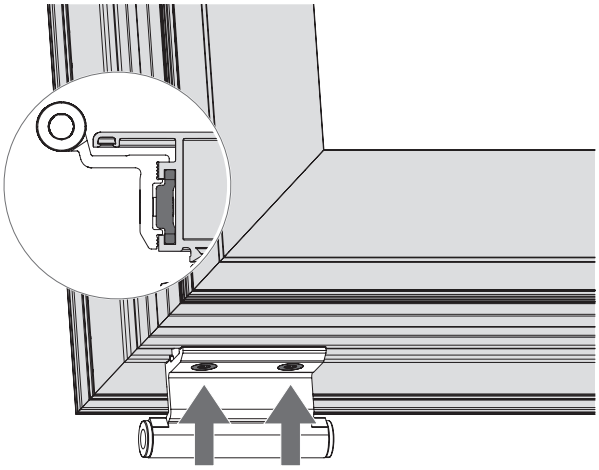

8.7.1.2 Turn-Only hinge | 200 kg

Installing the Turn-Only hinge

⇨ For elements with SW > 1300 mm, insert the clamping support-strip for the central hinge.

1. Insert bushes into the hinge.
   [1] Length 11 mm
   [2] Length 19.1 mm

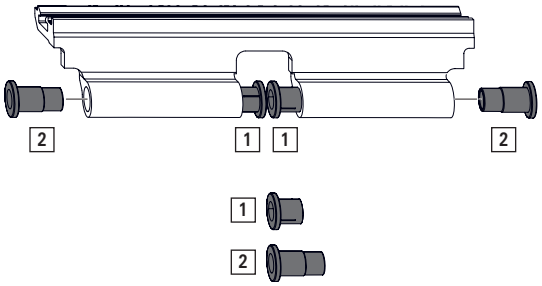

DANGER
Risk of death caused by incorrect installation of bushes!
The sash could fall out if the bushes have not been installed correctly in the hinge.
- Check to ensure that long bushes have been installed on the outside and short bushes on the inside (see figure).

2. Insert the clamping support-strip into the sash groove on the hinge side.

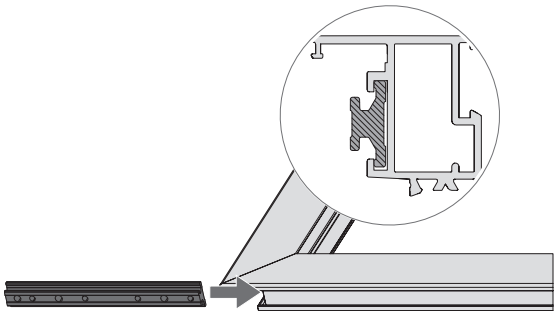

3. Use screws to fasten the hinge to the clamp strip in the sash.
   [1] Countersunk screw M5 x 10
   [2] Optional: self-tapping screw ST4.8 x 25
   Tool: T25 hexalobular socket
   Torque: 3.5 – 5.0 Nm
   Check that the hinge is fitted securely.

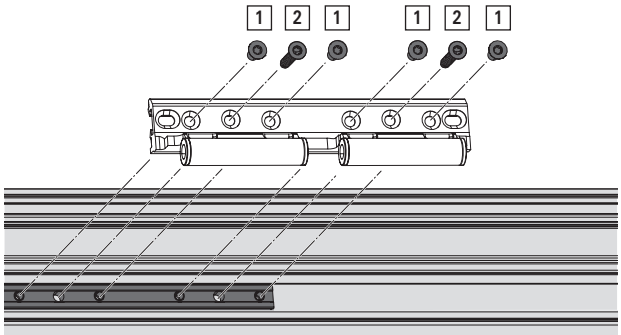

8.7.1.3 CL sash component

Installing the CL sash component

1. Insert the CL sash component into the sash groove on the hinge side.

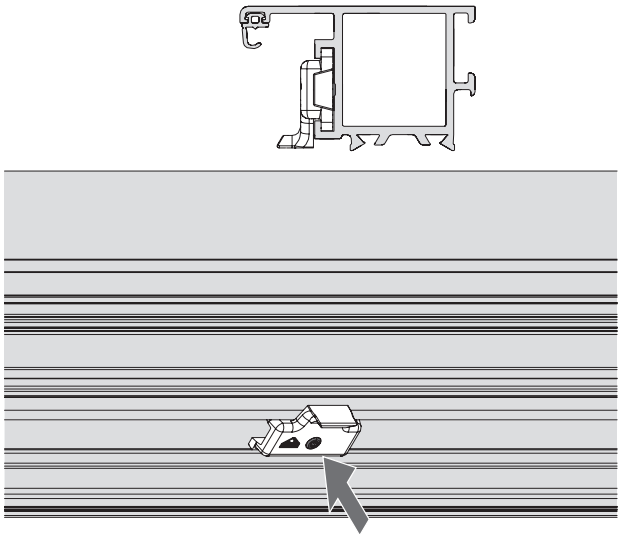

2. Fasten the CL sash component with a preassembled threaded pin.

   Tool: T10 hexalobular socket

   Torque: 2 – 2.5 Nm

8.7.1.4 Locking sleeve

Installing the locking sleeve

1. Produce the espagnolette lock by using a locking sleeve in the slot on connecting rod CR2.

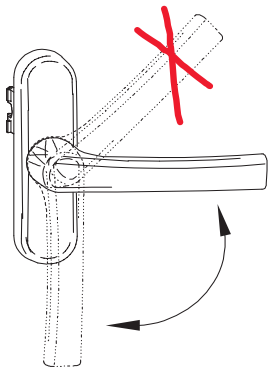

2. Produce the slot in connecting rod CR2 before installation [A].

INFO
X = freely positionable (suggestion: 60 mm)

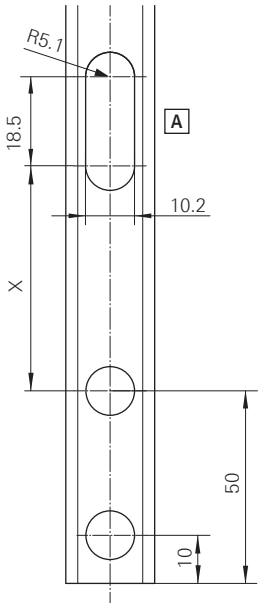

3. Drill out the sash in the 90° handle position [B] for locking sleeve with screw [C].
   Drill the hole:
   1 x Ø 3.5 mm; at least 4 mm deep.

4. Fasten the locking sleeve [1] with the screw [2].
   Tool: T25 hexalobular socket

8.7.1.5 Tilt-Only stay arm slide bar (TiSt)

Installing the Tilt-Only stay arm slide bar

1. Swing in the Tilt-Only stay arm slide bar.

INFO
Pay attention to the installation direction of the slide bar.

The arrow [A] must point towards the sash overlap.

Position the Tilt-Only stay arm slide bar depending on the SH (see installation drawing → *from page 468*).

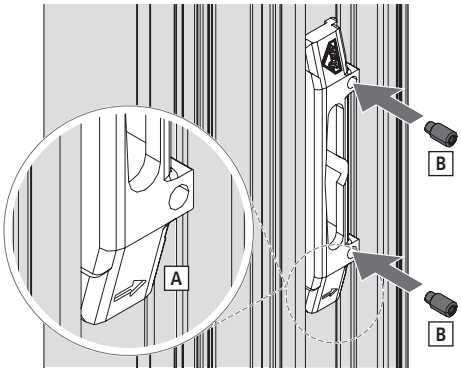

2. Install the slide bar with two threaded pins [B].
   Torque: 2 – 2.5 Nm
   Check that the slide bar is fitted securely.

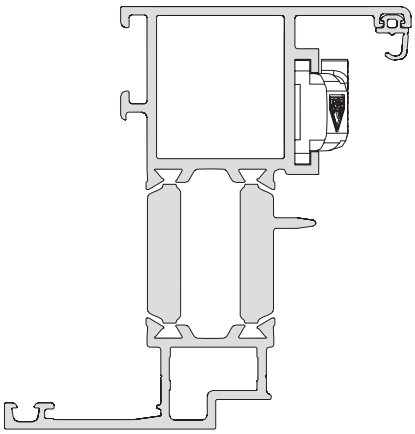

8.7.1.6 Tilt-Only stay arm (TiSs)

Installing the Tilt-Only stay arm

1. Connect the coupling rod and slider [1] to the connecting rod [2] and insert into the sash groove.

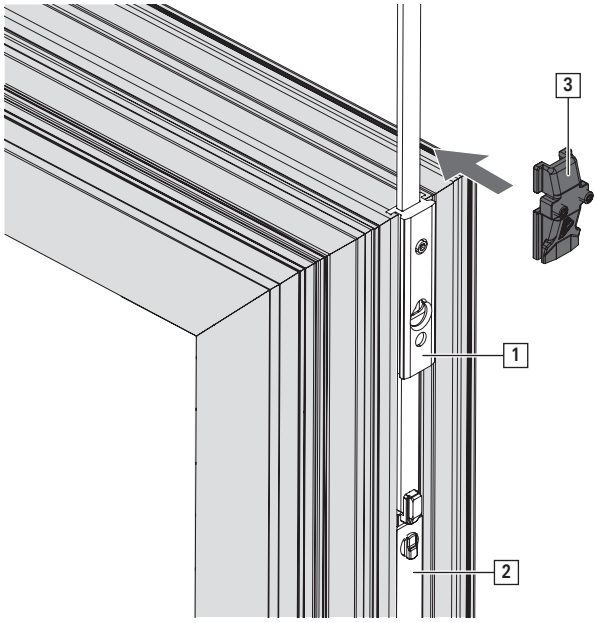

2. Position the stop [3] on the coupling rod above the slider and insert it into the sash groove.

3. Connect the coupling rod to the upper connecting rod.

8.7.2 Frame

INFO
Install the frame components when the frame is horizontal (workshop).

Once the frame is fitted, the reveal may prevent frame components from being installed correctly.

8.7.2.1 T-O bearing | 130 kg

Installing the T-O bearing

1. Swing the bearing into the profile so that the clamp strip engages in the frame groove.

2. Push the bearing onto the profile so that it is level and fasten with preassembled screws [1].
   Tool: T25 hexalobular socket
   Torque: 3.5 – 5.0 Nm
   Check that the bearing is fitted securely.

   INFO
   Do not leave a gap between the bearing and profile. The bearing must be positioned securely on the profile without any gaps.

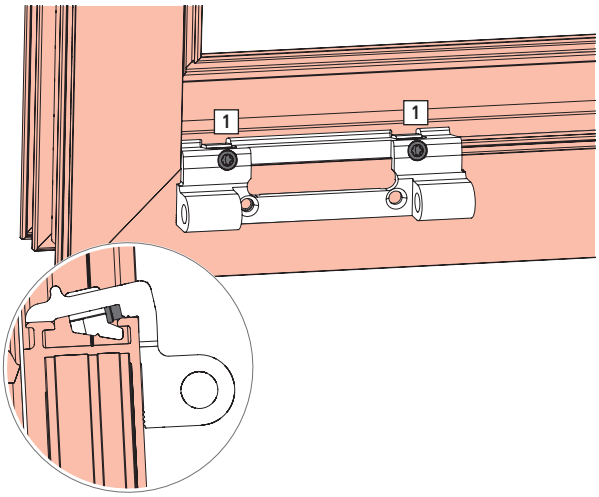

8.7.2.2 Stay bearing | 200 kg

Installing the stay bearing

1. Push the bearing onto the profile so that it is level and fasten with six screws.
   Tool: T25 hexalobular socket
   Torque: 3.5 – 5.0 Nm
   Check that the bearing is fitted securely.

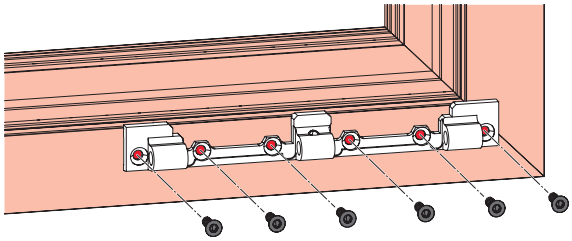

8.7.2.3 CL frame component

Installing the CL frame component

1. Swing the CL frame component into the profile on the hinge side.

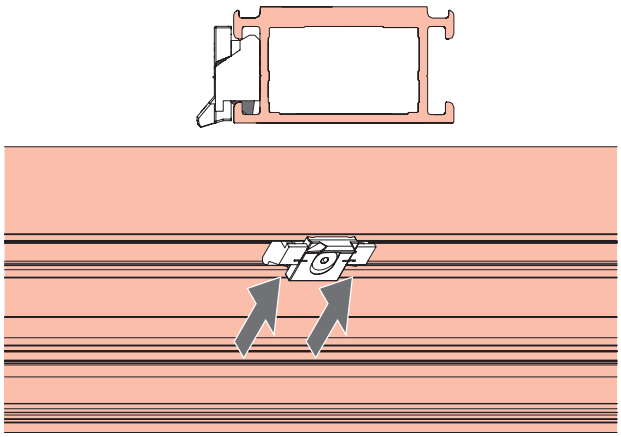

2. Screw down the CL frame component with two preassembled threaded pins.

   Torque: 2 – 2.5 Nm

8.7.2.4 Tilt-Only stay arm (TiSt)

Installing the Tilt-Only stay arm

1. Position the Tilt-Only stay arm depending on the SH (see installation drawing → *from page 468*).

   Screw the Tilt-Only stay arm into the frame with two preassembled threaded pins.

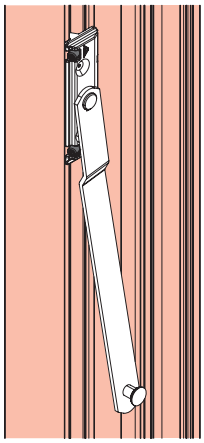

8.7.2.5 Tilt-Only stay arm (TiSs)

Installing the Tilt-Only stay arm

1. Fasten the Tilt-Only stay arm to the frame using two screws [1].

   Tool: T25 hexalobular socket

   Torque: 3.5 – 5.0 Nm
   Check that the bearing is fitted securely.
   Fasten the Tilt-Only stay arm with two preassembled threaded pins [2].
   Tool: T10 hexalobular socket

   Torque: 2 – 2.5 Nm

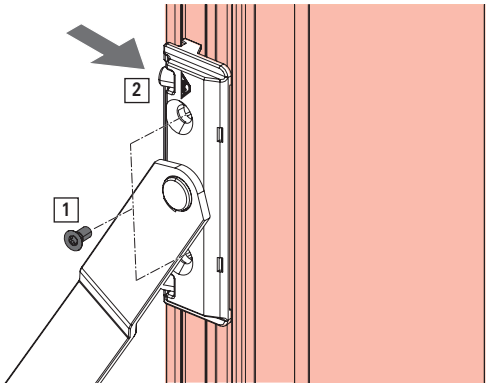

8.7.3 Joining the sash and frame

WARNING

Heavy loads pose the risk of injury and property damage.

Lifting and carrying heavy loads in an uncontrolled manner may lead to physical injury and property damage.

- Transport and installation must be carried out by at least two people.
- Use transportation means. → *14 "Transport" from page 517*

8.7.3.1 TiS hinge side | 130 kg

1. Move the handle to the tilted, open position.

2. Insert the sash with hinge between the bearings.
   Insert the pin fully.
   Check that the pin is seated flush with the bearing.

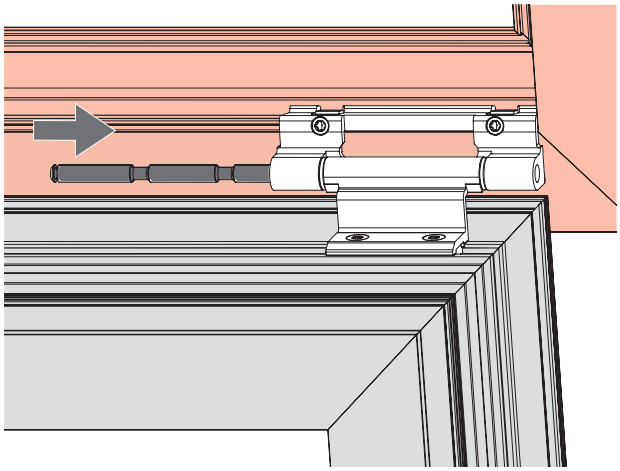

8.7.3.2 TiS hinge side | 200 kg

1. Move the handle to the tilted, open position.

2. Insert the sash with hinge between the bearings.

3. Insert the pin fully.

4. Screw the preassembled threaded pin fully (i.e. as far as it will go) into the bearing to secure the pin.
   Tool: T10 hexalobular socket
   Torque: 2 – 2.5 Nm
   Check that the hinge is fitted securely.

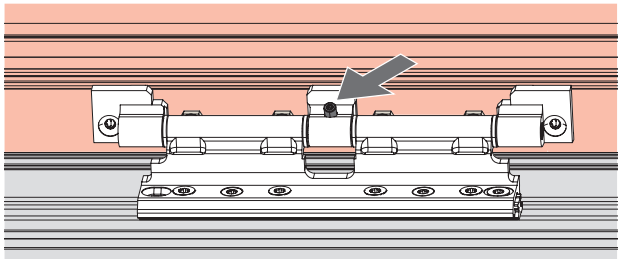

WARNING
An unsecured sash may pose a risk of death!
The sash may fall if the pin joining the bearing and the hinge is not secure.
- Check that the pin is seated flush with the bearing.
- Check that the threaded pin is flush with the stay hinge [C].
  The threaded pin must not protrude.

T-O central hinge | 200 kg

⇨ The clamping support-strip must be inserted into the sash before the Turn-Only hinge is installed.

1. Open the window sash.

2. Position the CL T-O bearing in accordance with the installation drawing.

3. Push the bearing onto the profile so that it is level and fasten with four screws.
   Tool: T25 hexalobular socket
   Torque: 3.5 – 5.0 Nm

INFO
Do not leave a gap between the bearing and profile. The bearing must be positioned securely on the profile without any gaps.

4. Insert bushes into the hinge.

5. Push the hinge onto the profile so that it is level and position it so that it is aligned with the bearing.
   Push the clamping support-strip behind it and fasten with four screws.

6. Insert the sash with hinge between the bearings.

7. Insert the T-O bearing pin from below and push it upwards.

8. Tighten the fixed screws.
   Tool: T25 hexalobular socket
   Torque: 3.5 – 5.0 Nm

INFO
Do not leave a gap between the hinge and profile. The hinge must be positioned securely on the profile without any gaps.

8.7.3.3 Tilt-Only stay arm (TiSt)

Connecting the Tilt-Only stay arm to the slide bar

1. In the tilted sash position, guide the scissor stay arm across the centre of the slide bar with the mounting pin [1] [A].

INFO
Secure the sash to prevent it from falling.

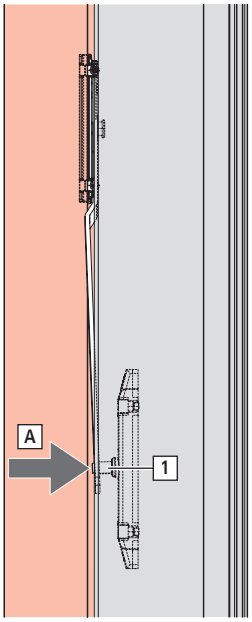

2. Insert the mounting pin in the slide bar and close the sash.

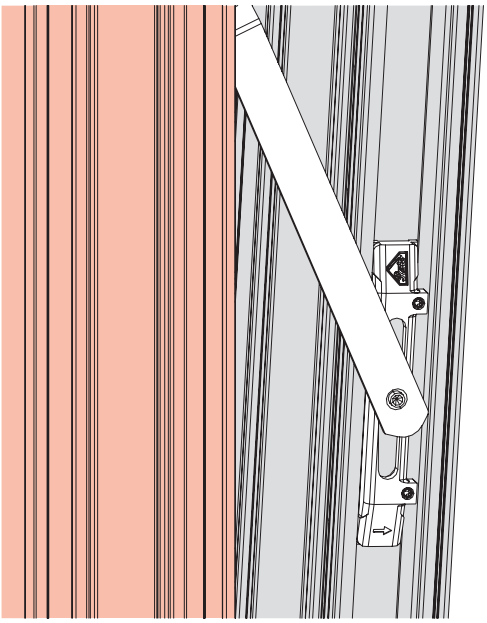

8.7.3.4 Tilt-Only stay arm (TiSs)

Installing the Tilt-Only stay arm

1. With the sash in a tilted position, guide the scissor stay arm over the opening in the slider with a mounting pin.

INFO
Secure the sash to prevent it from falling.

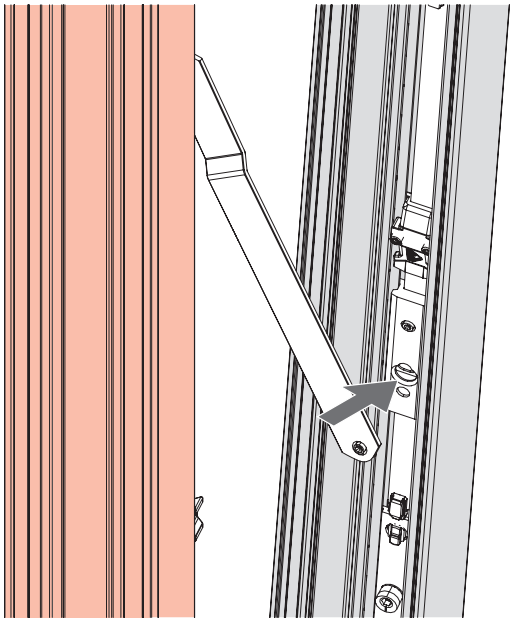

2. Clip the mounting pin into the slider.

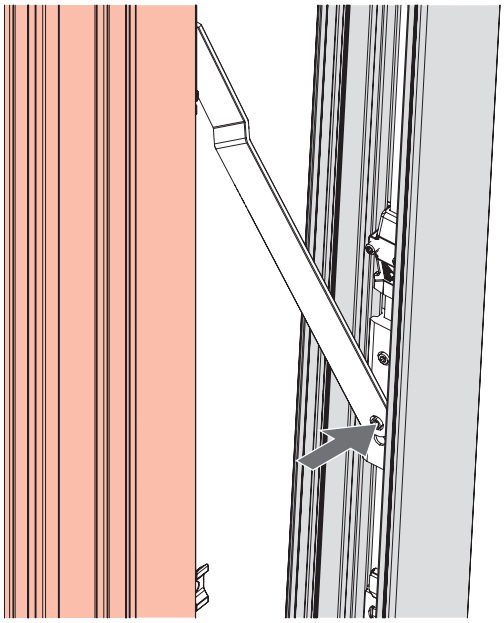

8.8 Floating-mullion hardware

8.8.1 Drilling and routing dimensions

8.8.1.1 FM espagnolette, internal

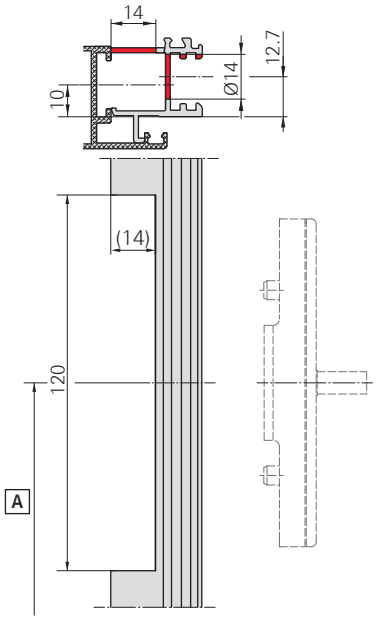

Perform routing in the surface-mounted floating-mullion profile.

[A] Floating mullion handle height (HH(FM))

Drill the hole:

1 x Ø 14 mm

8.8.1.2 Shootbolt

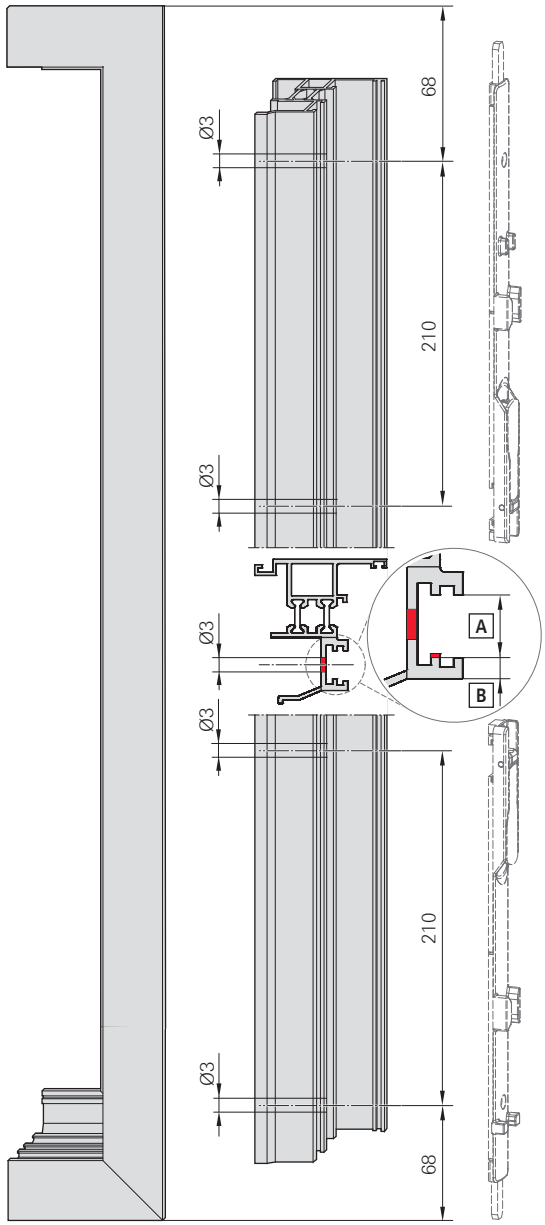

Drill holes:

4 x Ø 3 mm

[A] 14 mm (12 - 13.9 mm available upon request)

[B] Min. 3 mm, max. 4.2 mm

8.8.2 Sash

8.8.2.1 FM espagnolette

Installing the FM espagnolette

1. Connect the FM espagnolette to the sash components, insert into the sash profile and fasten using the preassembled threaded pins.

   Tool: T10 hexalobular socket

   Torque: 2 – 2.5 Nm

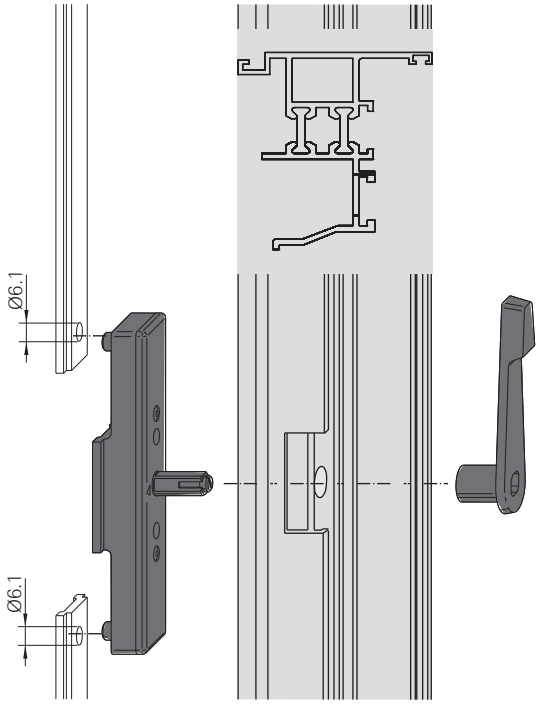

2. Install the surface-mounted floating-mullion profile on the sash.

   While doing so, guide the mount for the operating lever through the drill hole.

3. Install the operating lever on the floating-mullion espagnolette (FM).

8.8.2.2 FM-Su espagnolette

Installing the FM-Su espagnolette

1. Install the toggle lever espagnolette with sash components in the sash.

2. Fasten the toggle lever espagnolette with preassembled threaded pins.

   Tool: T10 hexalobular socket

   Torque: 2 – 2.5 Nm

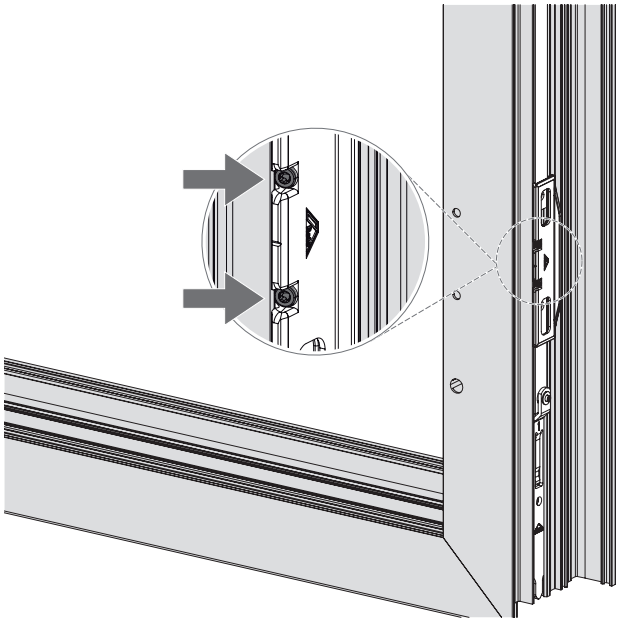

3. Turn the notch in the toggle lever towards the notch in the bolt [A].

   Tool: size 4 hex key

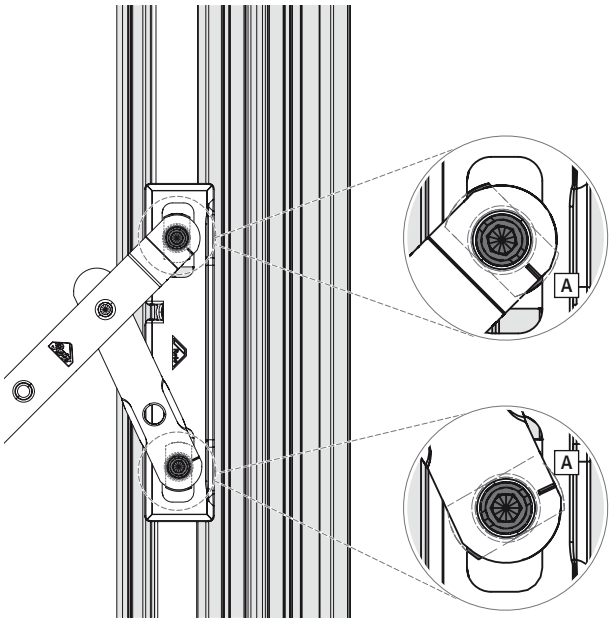

8.8.2.3 FM-SuN espagnolette

Installing the FM-SuN espagnolette

⇨ Connecting rods prepared → *from page 292*.

1. Install the guide rail with sash components in the sash.

2. Fasten the guide rail with a preassembled threaded pin.

   Tool: T10 hexalobular socket

   Torque: 2 – 2.5 Nm

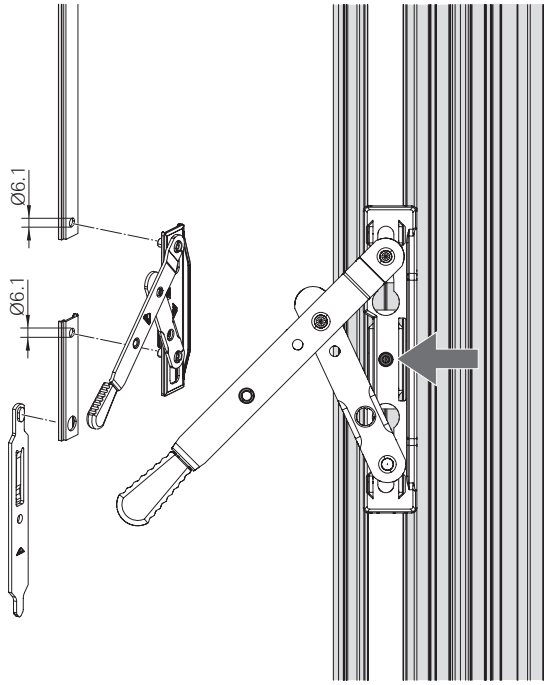

8.8.2.4 FM-Sh espagnolette

Installing the FM-Sh espagnolette

1. Insert the shootbolt into the sash profile.

2. Screw the shootbolt down when locked.
   Tool: size 4 hex key

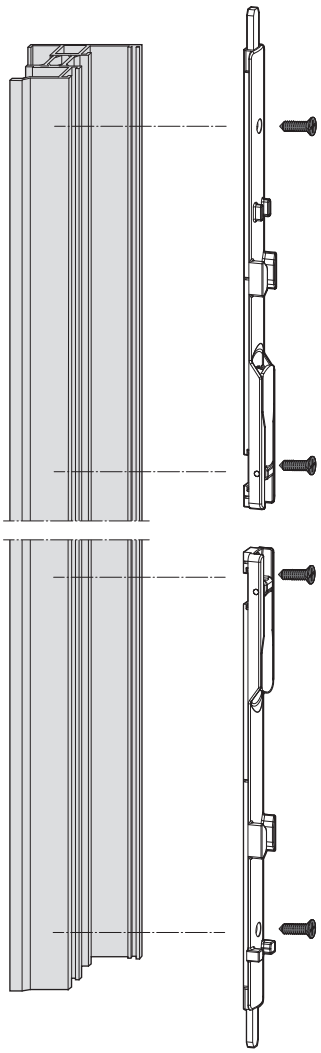

8.8.2.5 FM-R espagnolette

Installing the FM-R espagnolette

1. Connect the slider to the sash components and insert into the sash profile.

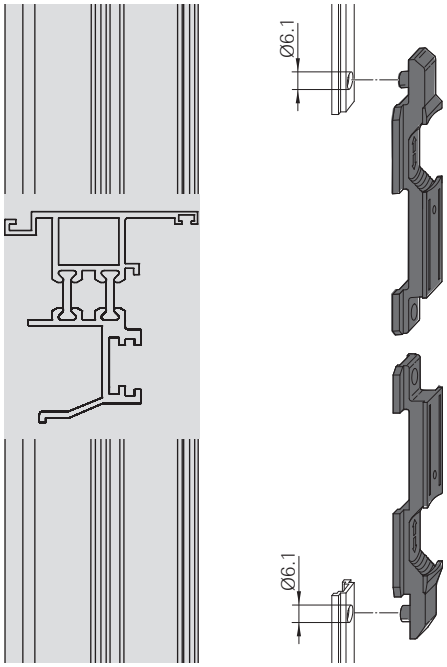

2. Stop the slider when locked.
   Tool: size 2.5 hex key

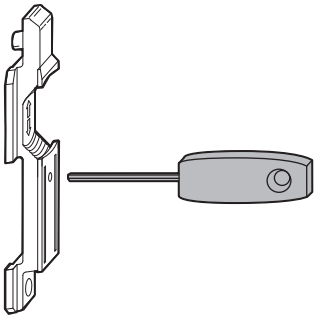

8.9 Accessories

8.9.1 Drilling and routing dimensions

8.9.1.1 Roto Line AL geared-handle

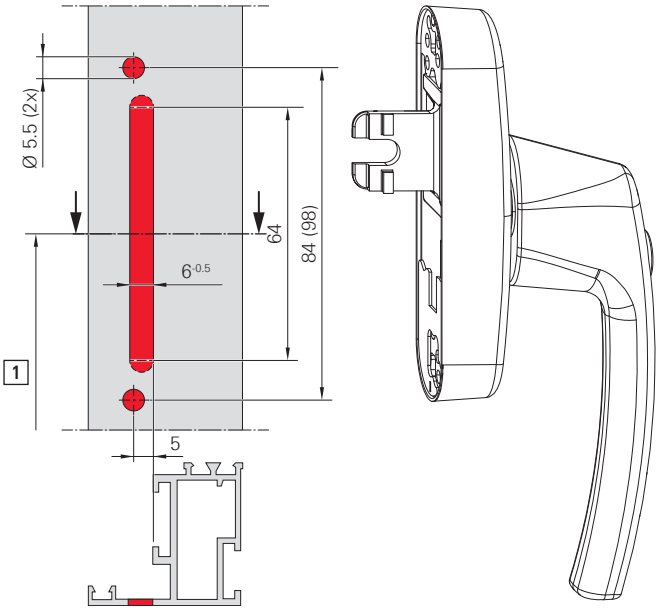

Drill holes for the handle's sprocket and lugs with SH ≥ 930 mm

[1] Handle height HH ≥ 260 mm

8.9.1.2 Flush-encased gearbox with / without mishandling device

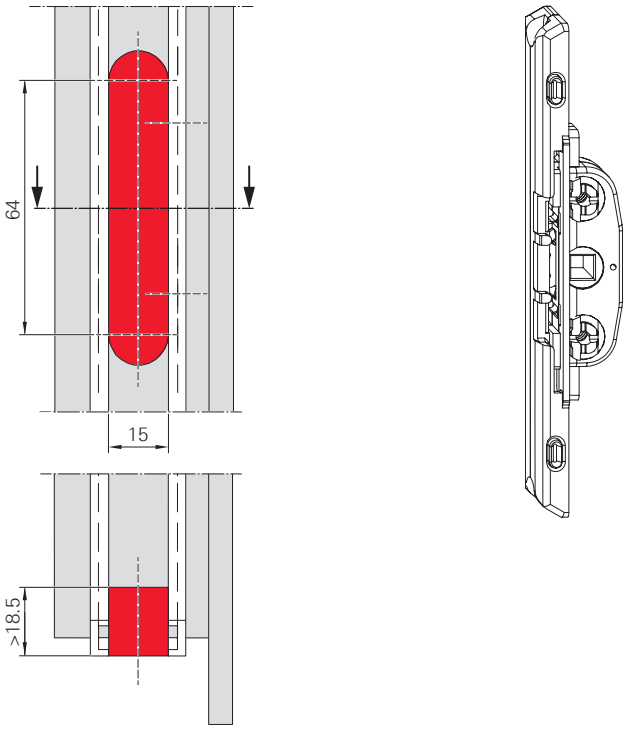

Routing for the gearbox

8.9.1.3 Window handle – standard

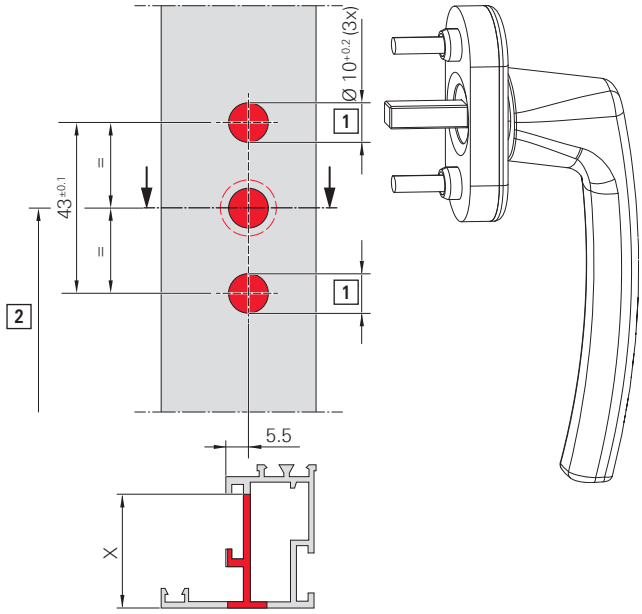

Drill holes for the handle's square spindle and lugs with SH ≥ 930

[1] Only drill through the first profile wall.

[2] Handle height = HH ≥ 260 mm

X = drilling depth for square spindle

8.9.1.4 Flush-encased gearbox with handle without escutcheon

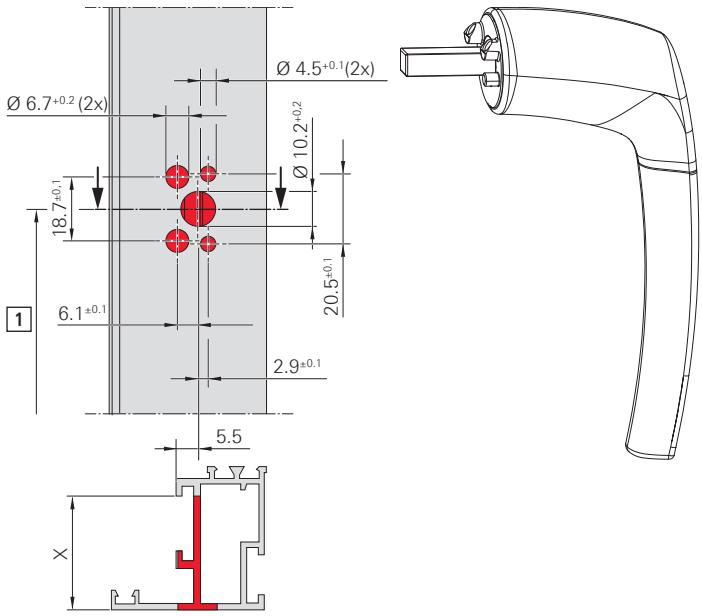

Drill holes for the handle's square spindle and lugs with SH ≥ 930

[1] Handle height = HH ≥ 260 mm

X = drilling depth for square spindle

8.9.1.5 Turn lock

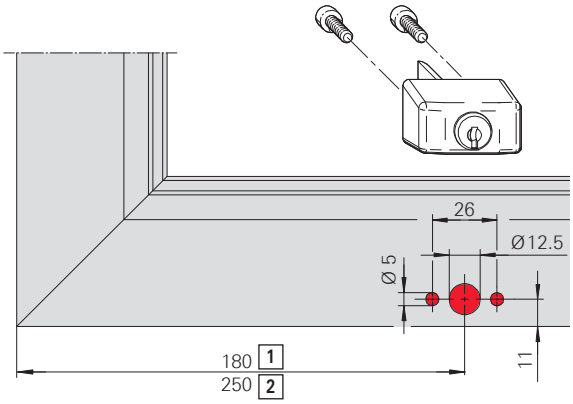

Drill holes for turn lock

[1] T&T

[2] TF

8.9.1.6 Locking plate set

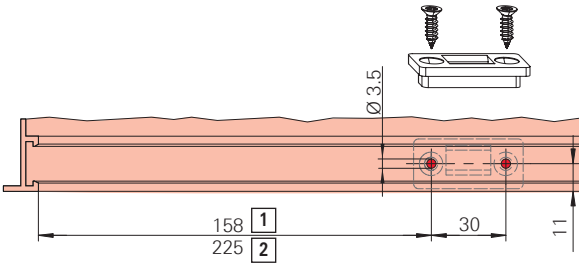

Drill holes for locking plate

[1] T&T

[2] TF

8.9.2 Roto handles

8.9.2.1 Handle without escutcheon

INFO
The handle without escutcheon can only be used on profile systems with an overlap height of ≥ 10 mm.

Installing the mounting plate with handle

⇨ The flush-encased gearbox must be installed → *from page 301*.

1. Swing the mounting plate [1] into the profile.
   Fasten the handle [2] through the mounting plate with two screws.
   Tool: T25 hexalobular socket

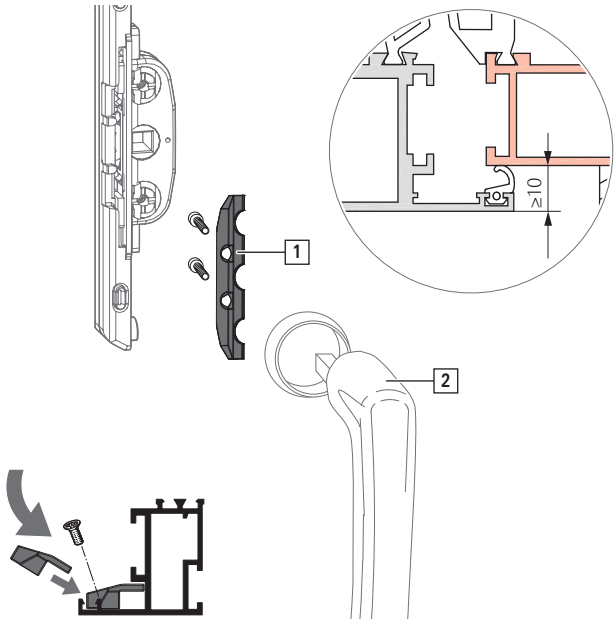

8.9.2.2 Roto Line | window handle, standard

Installing the handle

⇨ The flush-encased gearbox must be installed → *from page 301*.

1. Move the handle [1] to the turn position.

2. Rotate the cover [2] on the handle 90°.

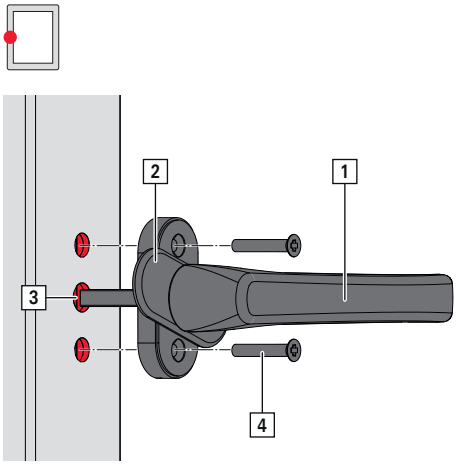

3. Insert the handle into the sash [3].

4. Fasten the handle with two screws [4].
   Overcome the resistance of the transport safety device while doing so.

5. Rotate the cover on the handle 90°.

8.9.2.3 Roto Line | window handle for geared-handle

Installing the handle

⇨ The connector must be installed → *from page 298*.

⇨ With a lockable handle, the SEC espagnolette protection must be installed → *from page 299*.

1. Move the handle to the turn position.

2. Place the espagnolette [1] on the sash from the inside of the sash.
   The fork [2] engages in the connector bolt [3].
   Fit the espagnolette support [4] from the outside of the sash on the sash to the espagnolette.

a. Align the espagnolette support on the drill holes.
b. Fasten the espagnolette with screws [5].

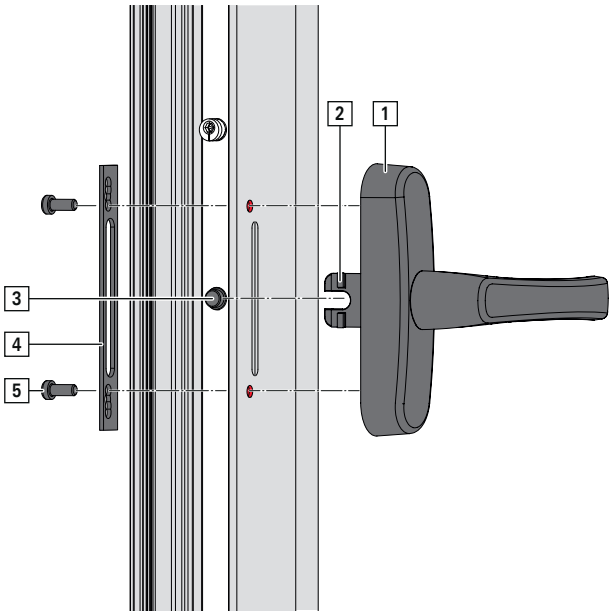

3. Turn the handle to check that it runs smoothly.

4. Move the handle to the closed position.

8.9.3 Turn lock and locking plate set

Installing the turn lock

1. Fasten the turn lock to the sash with two screws.
   Tool: T25 hexalobular socket

> **INFO**
> When installing the turn lock, pay attention to the position of the lock hook.

Insert the key into the lock.

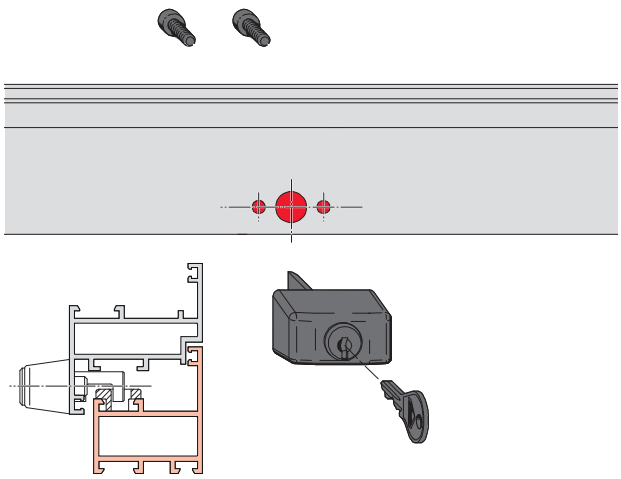

Installing the locking plate set

1. Fasten the locking plate to the frame with two screws.
   Tool: T25 hexalobular socket

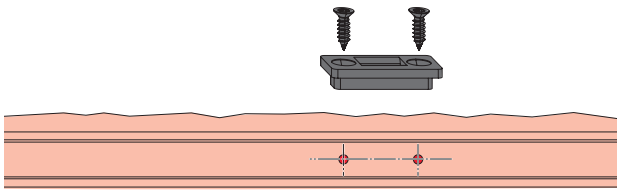

8.9.4 Bullet catch

Installing the bullet catch

⇨ First opening sash with corner drives.

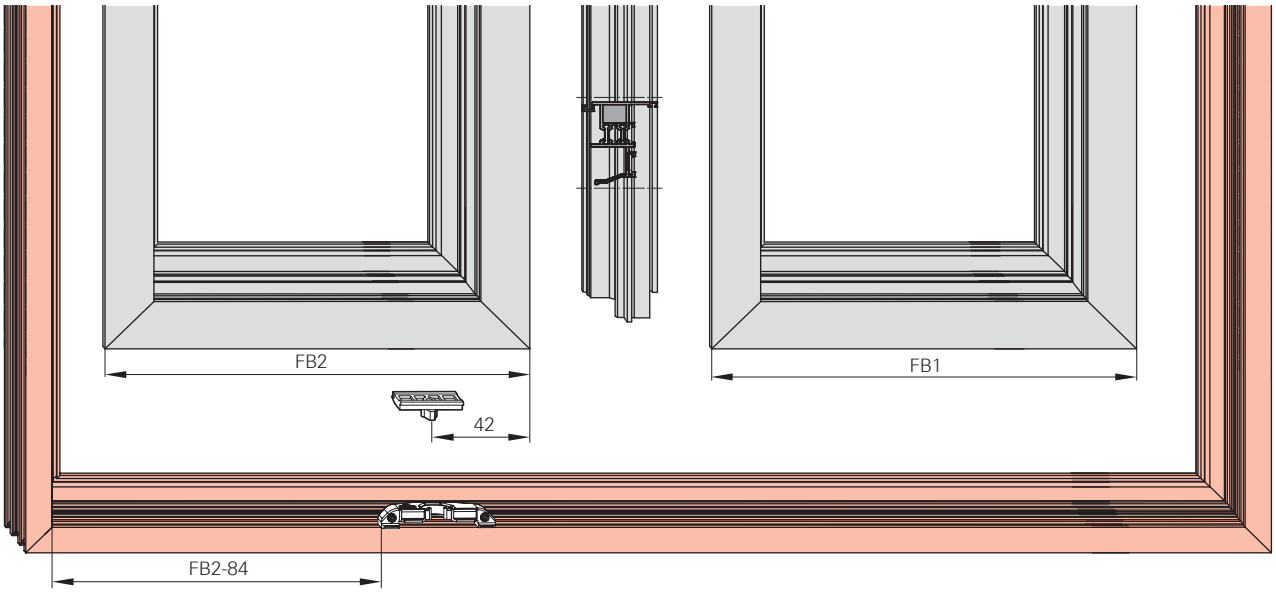

INFO

On floating-mullion elements, the bullet catch is intended for horizontal installation only.

Except for: FM (second opening sash) | accessible | 90 - 130 kg

Installing the balcony door bullet catch

⇨ Slot in connecting rod CR2 [1].

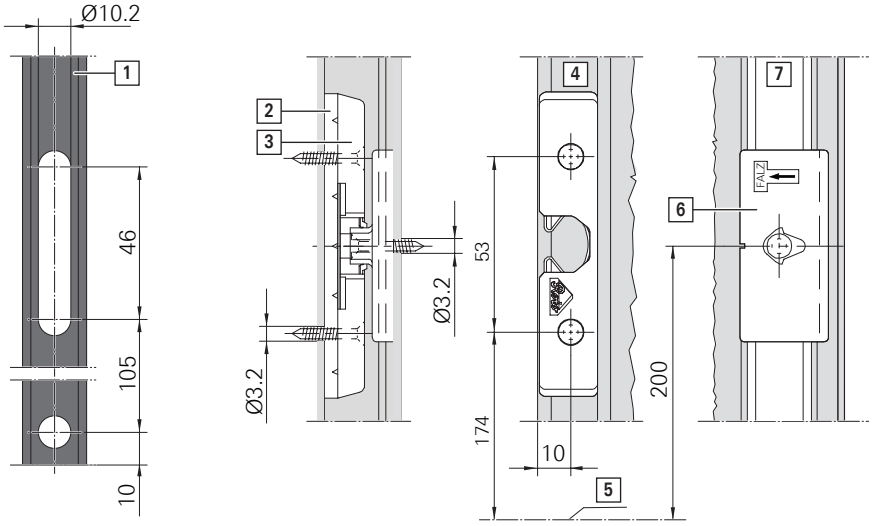

1. Clip the packer [2] into the balcony door bullet catch [3]. Fasten everything in the sash groove on the second opening sash [4] above the handle (handle centre [5]) with two screws.

2. Place the balcony door bullet-catch cam [6] in the first opening sash [7] above the handle on connecting rod CR2 and position on the sash groove.

Fasten with one screw through the slot in the connecting rod.

INFO
The balcony door bullet catch is intended for vertical installation only. It can also be installed below the handle.

8.9.5 Turn restrictor

CAUTION

Incorrect installation poses a risk of injury.

Lifting and carrying heavy loads in an uncontrolled manner may lead to physical injury.

- Transport and installation must be carried out by at least two people.
- Use transportation means. → *14 "Transport" from page 517*
- Note the applicable accident prevention regulations.

INFO

Comfort component

Not a security component in accordance with DIN EN 13126-5

Use turn restrictors → *3.4 "Minimum sash widths and heights" from page 50*

- When window sashes could hit against window reveals or aluminium supports uncontrollably (e.g. due to wind) in such a way as to damage or destroy the hardware or profiles.
- In public buildings.
- With opening angles up to max. 90°.

INFO

Check the end position of the sash rotation and correct it if necessary by moving the sash component slightly.

Adjust the brake with a size 4 hex key after installation.

8.9.5.1 Turn restrictor, braked

Installing the turn restrictor, braked

1. Position the sash bearing in the sash groove and fasten with two screws.

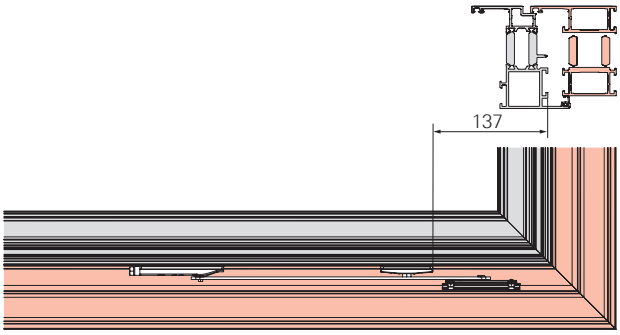

2. Position the frame bearing in the frame groove and fasten with two threaded pins so that it is at least flush.

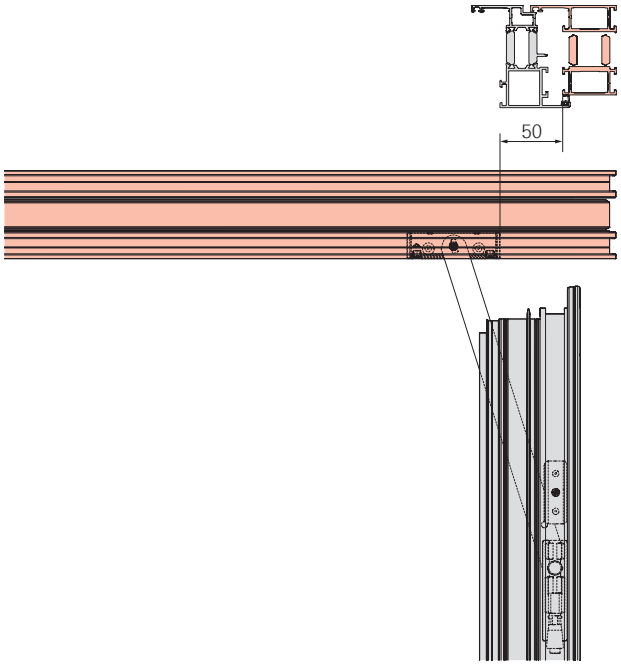

3. Guide the swivel pin for the frame bearing through the turn restrictor arm.

4. Lock the connection (between the rotating arm and frame bearing) by turning the cam 180° using a size 4 hex key.

8.9.5.2 Turn restrictor, braked, damped

Installing the turn restrictor, braked, damped

INFO

Maximum opening width for the braked, damped turn restrictor:

Size 1: approx. 63°

Size 2: approx. 90°

1. Position the frame bearing in the frame groove and fasten with two threaded pins so that it is at least flush [1].

   Tool: T10 hexalobular socket

   Torque: 2 – 2.5 Nm
   Position the sash bearing in the sash groove and fasten with two screws [2].
   Tool: T10 hexalobular socket

   Torque: 2 – 2.5 Nm

   Fasten the pull rod to the frame bearing using the mushroom-head screw provided [3].

   Tool: T10 hexalobular socket

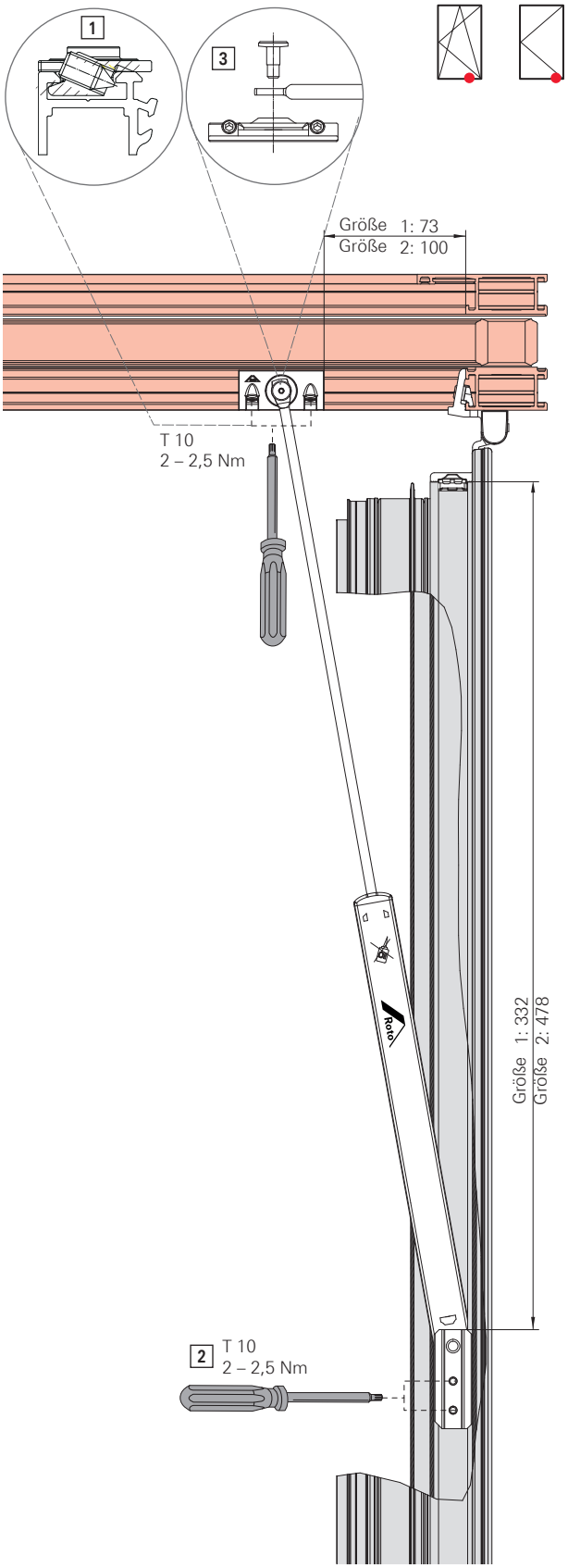

8.9.6 Night vent

INFO
Check all dimensions and functions during demo assembly prior to series production.

Installing the night vent

1. Prepare the connecting rod (see installation drawing of night vent without and with additional stay arm for T&T and TiSt).

   T&T = connecting rod CR3: drill the hole:

   1 x Ø $10.1^{+0,1}$ mm

   TiSt = connecting rod CR1 and CR2: drill holes:

   Each 1 x Ø $10.1^{+0.1}$ mm

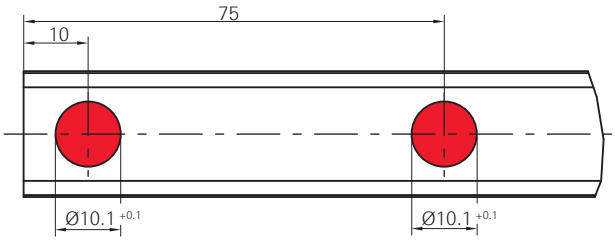

2. Secure the coupler component [1] with connecting rod [2], night vent locking cam [3] and one screw [4].

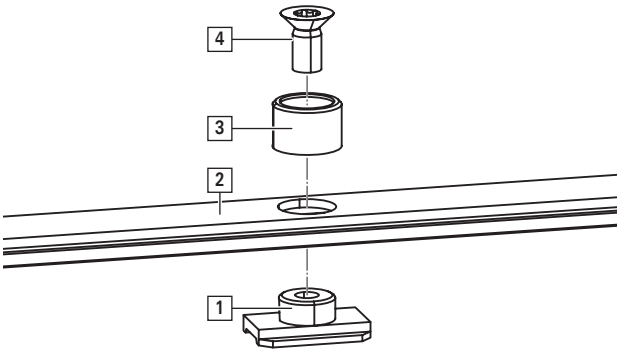

3. Insert the connecting rod with components (depending on the corresponding opening type and additional stay arm).

INFO
If the corner drive with mishandling device cannot be installed, a flush-encased gearbox with mishandling device must be fitted.

4. Drill the inside of the frame.
   Drill holes:
   2 x Ø 2.8 mm, at least 23 mm deep.

INFO
Note that the drill hole dimensions for T&T differ from those for TiSt.

[A] An additional night vent is recommended with SW ≥ 1000 mm (for TiSt)

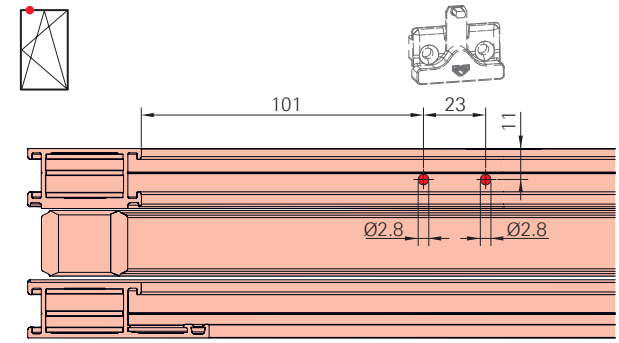

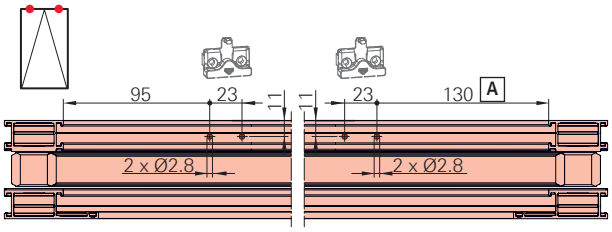

5. Fasten the night vent with two screws.
   Tool: T15 hexalobular socket
   Torque max. 1.0 Nm

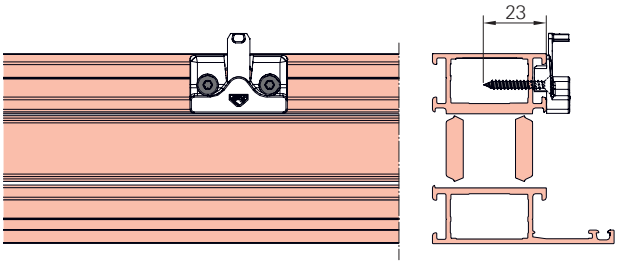

9 Installation drawings

9.1 Striker positions

9.1.1 Explanation

The following markings are used in the installation drawings to emphasise references and other elements:

Marking	Translation
Standardposition der SST (Verschlussseite) beim DF / DK / TF bis 130 kg (siehe auch Einbauzeichnungen)	Standard position of strikers (locking side) for T-O / T&T / TF up to 130 kg (also see installation drawings)
GH <1/2 FH & FH > 1800: Position der SST (Verschlussseite) beim DF / DK / TF bis 130 kg	Handle height < 1/2 sash height and sash height > 1800: position of ST (locking side) for T-O / T&T / TF up to 130 kg
Aufsatzgetriebe	Geared-handle
Einlassgetriebe	Flush-encased gearbox
DF ohne EU	Turn-Only sash without corner drive
DF mit EU	Turn-Only sash with corner drive
DK	Tilt&Turn
FH	Sash height
GH	Handle height
max	Maximum
min	Minimum
RHi	Frame height, internal
SST	Striker
Treibstangenstanzung Getriebesperre X=frei positionierbar (Vorschlag: 60 mm)	Connecting rod punched hole for espagnolette lock X=freely positionable (suggestion: 60 mm)

9.1.2 Standard

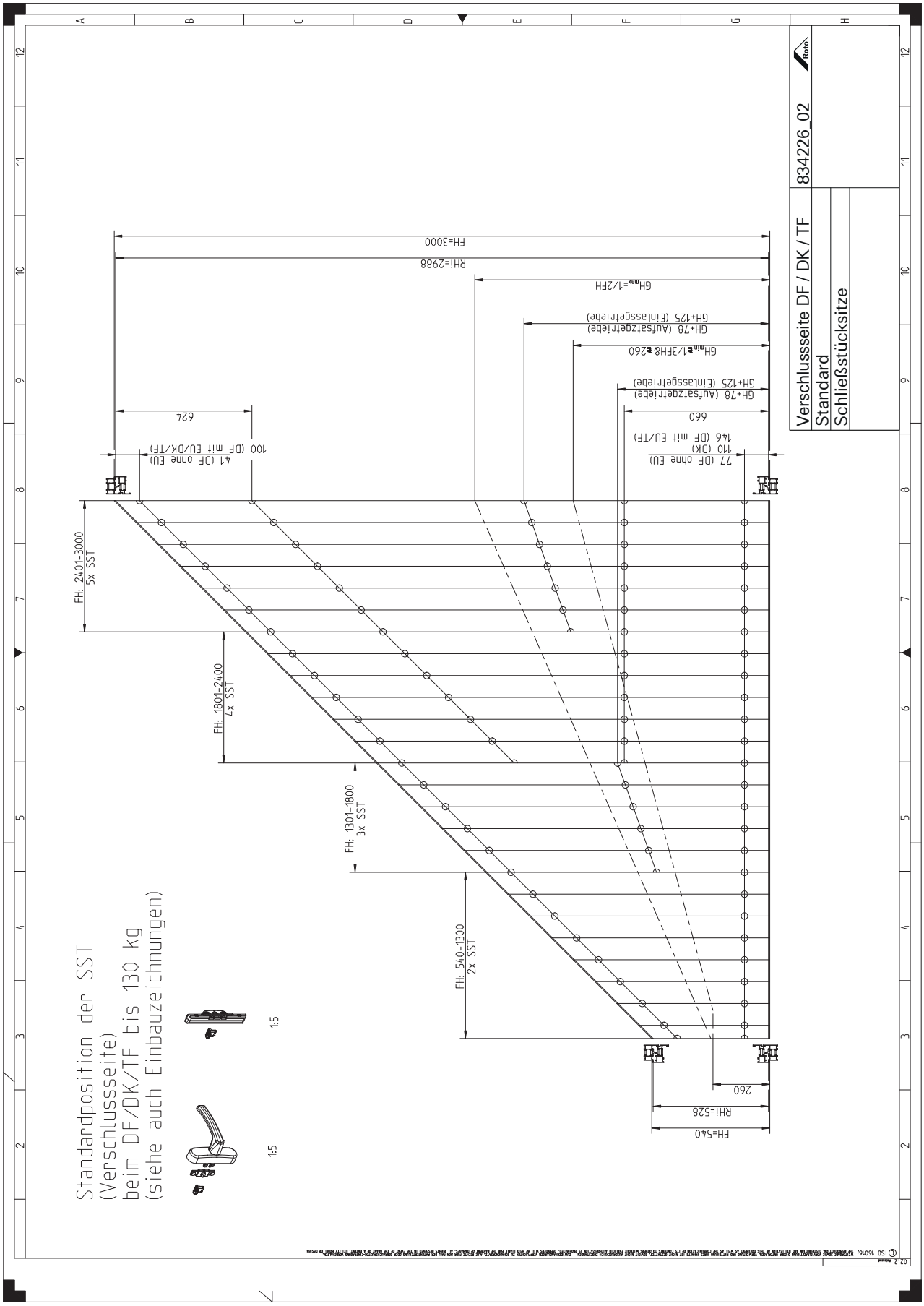

Standard – depending on HH and SH

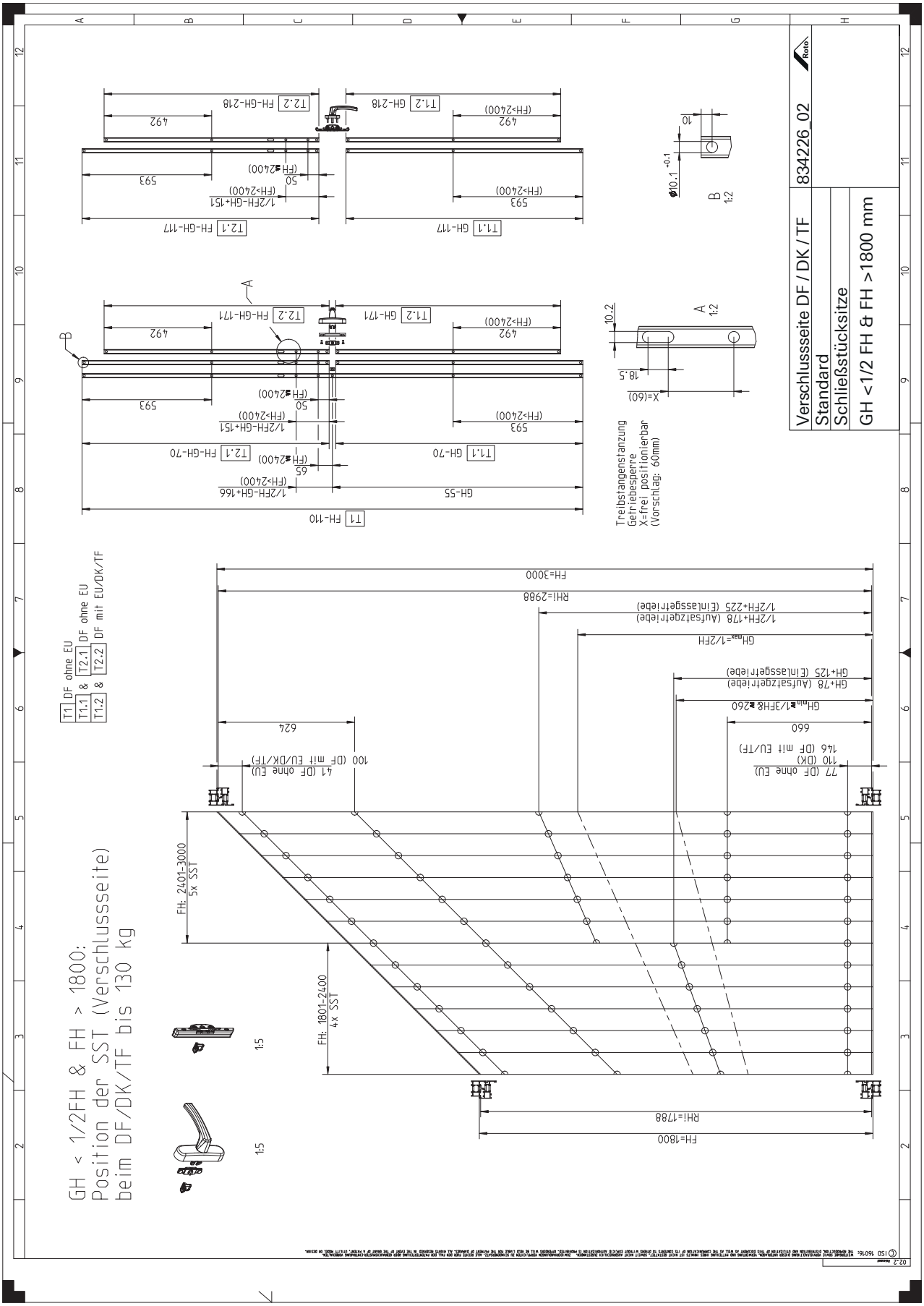

9.2 Tilt&Turn hardware

9.2.1 Explanation

The following markings are used in the installation drawings to emphasise references and other elements:

Marking	Translation
Abweichungen Abstand RC SST mit DB	Deviations from distance RC striker with turn restrictor
Abweichung Treibstange T5 / Abstand RC SST	Deviation from connecting rod CR5 / distance RC striker
Abweichung der Werte siehe Tabelle	Refer to the table for deviations in the values
Anwendungsbereich FH von 2700 bis 3000 mm, BD > 5 mm	Application range: sash height from 2700 to 3000 mm, hinge passage > 5 mm
Aufsatzgetriebe	Geared-handle
Axer	Sash stay
barrierefrei	Accessible
Beim Einsatz der Eckumlenkung mit Schaltsperre muss vor der Serienfertigung unbedingt ein Musteranschlag durchgefuehrt werden, um alle Maße und die Funktion zu prüfen.	When using the corner drive with mishandling device, demo assembly is essential before series production starts to check all dimensions and correct functioning.
Beim Verbauen der Zweitschere muss bei der Falzluftreduzierung, entsprechend der Drehrichtung des Fluegels, der rechte bzw. linke Steg abgetrennt werden.	When fitting the additional stay arm, the right or left profile leg must be detached for rebate-clearance reduction depending on the direction of rotation of the sash.
DB gebr.	Braked turn restrictor
DB Gr. 1	Damped / braked turn restrictor size 1
DB Gr. 2	Damped / braked turn restrictor size 2
Die Angaben dienen nur zur ungefaehren Positionierung.	The information is for approximate positioning only.
Drehkipp-Beschlag	Tilt&Turn hardware
Einlassgetriebe	Flush-encased gearbox
Empfehlungen seitens Roto : je nach Profilstabilitaet bzw. Beanspruchungsgruppe des Profils muessen / koennen die Mittel-verschluesse frueher / spaeter gesetzt werden.	Recommendations from Roto: depending on the profile stability or profile loading group, the centre locks must / can be put in place at an earlier / later point.
FB	Sash width
FB zwischen 1300 & 1320 mm durch Versetzen der Standard Schließposition möglich	A sash width of between 1300 and 1320 mm is possible through moving the standard locking position
FH	Sash height
Flügelheber	Sash lifter
generell bei allen Koppelstellen, wenn nichts anderes angegeben	Generally for all coupling points, unless otherwise specified
Garnitur-Positionierung	Set positioning
GH	Handle height
mit DB	With turn restrictor
Mitgeltende Unterlagen für die Montage beachten!	Comply with the other applicable documents for installation.
ohne DB	Without turn restrictor
Position	Position
Position ** für Funktion des Flügelhebers muss gegebenenfalls nachgestellt werden.	The position ** may have to be readjusted to enable the sash lifter to work properly.
RBi	Frame width, internal
RC... Ausführung	Resistance class... version
RHi	Frame height, internal
Schließstücksitze	Striker positions
Spaltlüfter mit Zweitschere	Night vent with additional stay arm
Spaltlüfter ohne Zweitschere	Night vent without additional stay arm
Standard	Standard
Treibstangenmaße	Connecting rod dimensions
zusätzliche Hinweise Drehbegrenzer (DB)	Additional information on the turn restrictor (TR)
Zweitschere	Additional stay arm
1 - Position: Voreinstellung über den Anschlag im Rahmenprofil vornehmen.	1 – position: perform presetting via the stop in the frame profile.
2 - Position: Feineinstellung erfolgt über den Exzenter am Flügel-heber (Hebearmeinstellung)	2 – position: precision adjustment is performed via the eccentric on the sash lifter (lift arm adjustment)

9.2.2 T&T | 90 - 130 kg

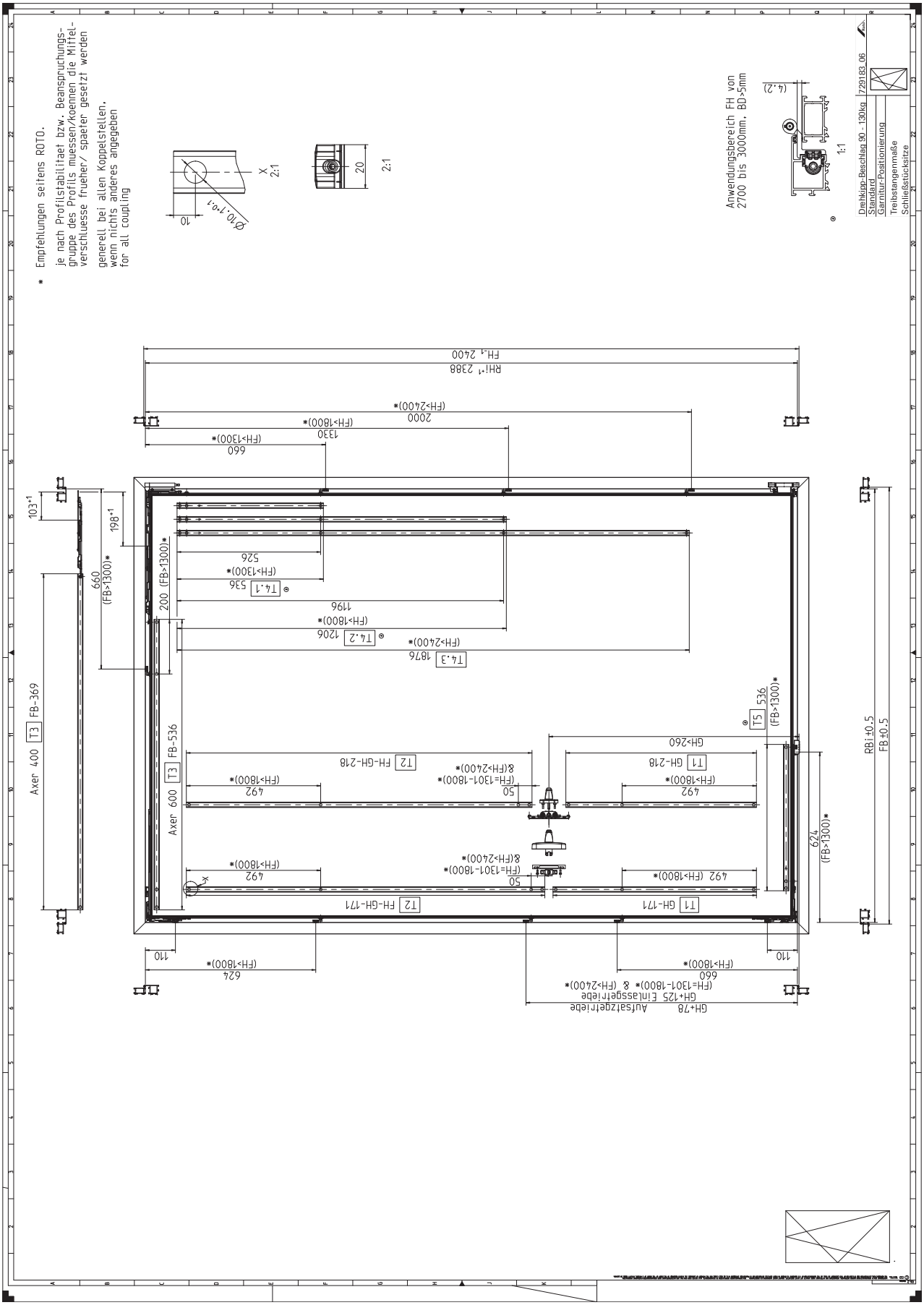

9.2.3 T&T | RC 2 | 90 - 130 kg

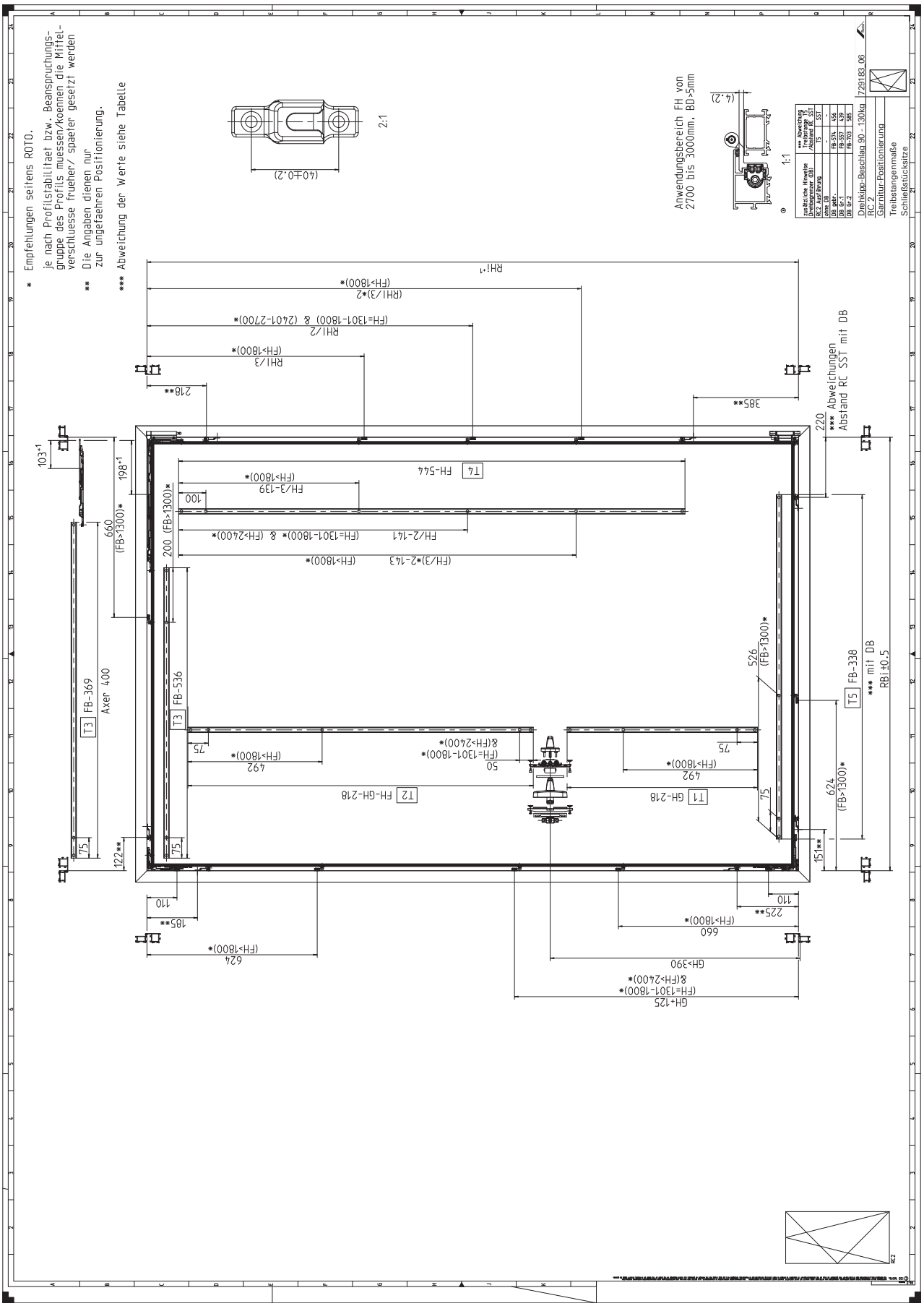

9.2.4 T&T | RC 3 | 90 - 130 kg

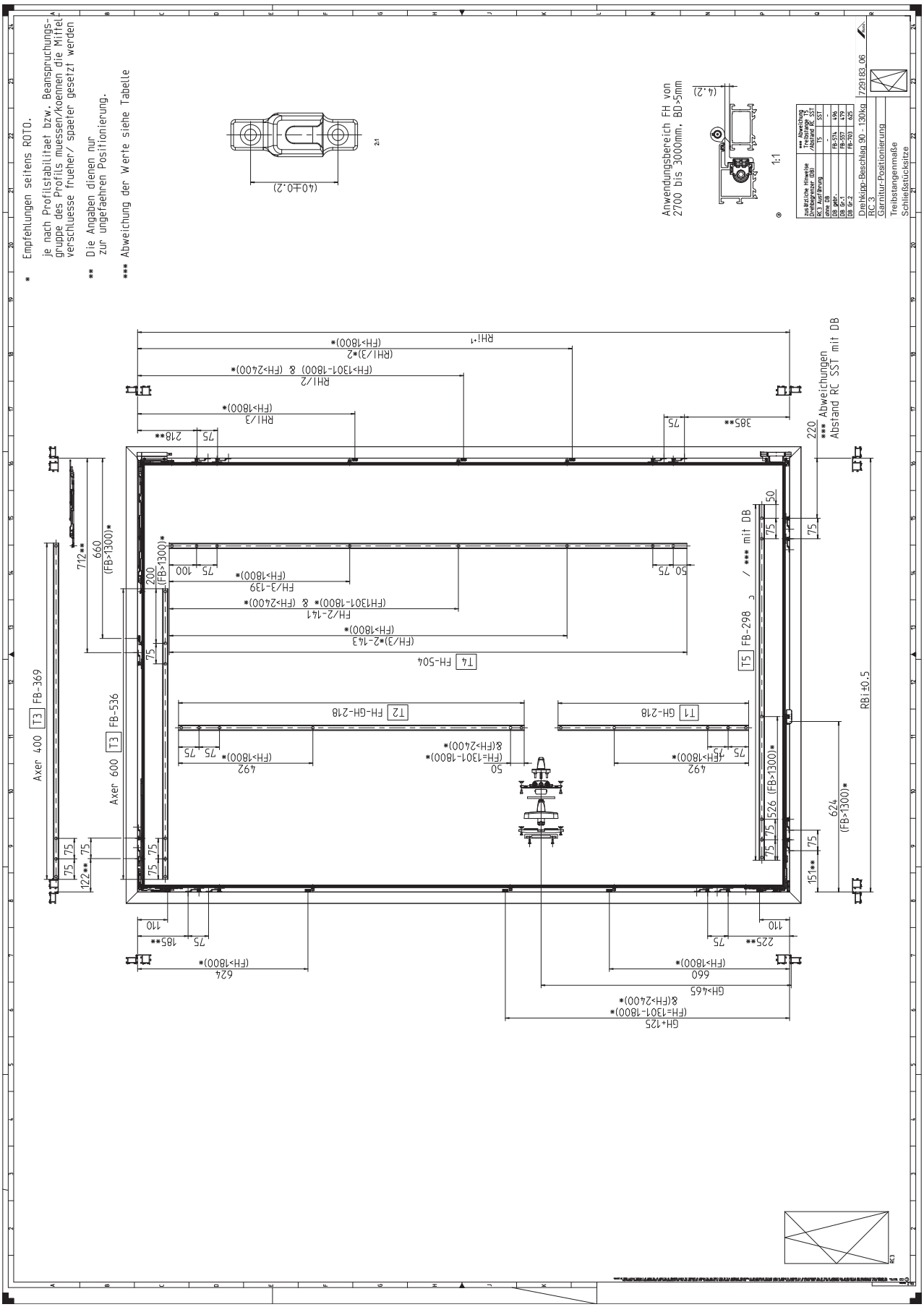

9.2.5 T&T additional stay arms | 90 - 130 kg

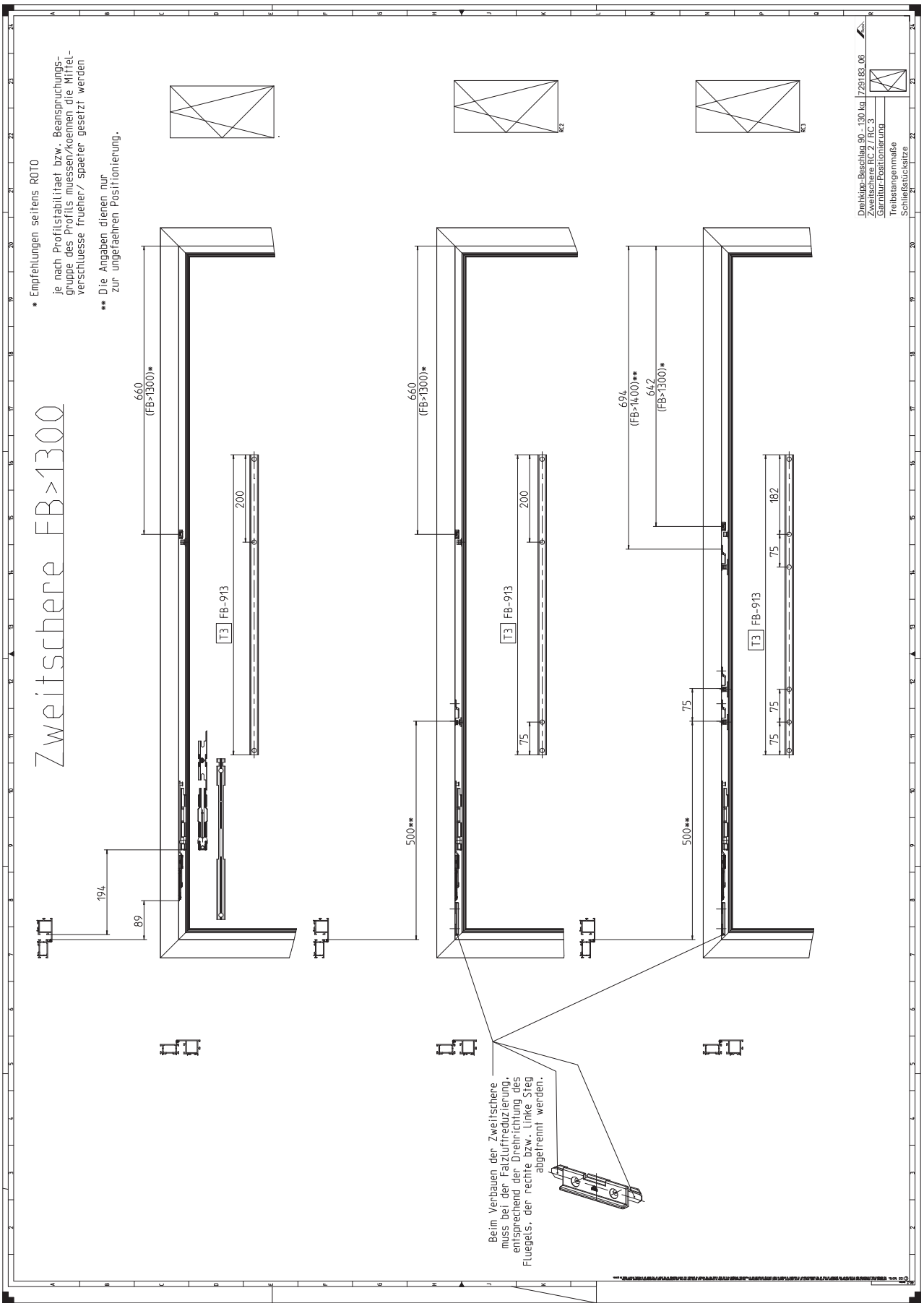

9.2.6 T&T accessible | 90 - 130 kg

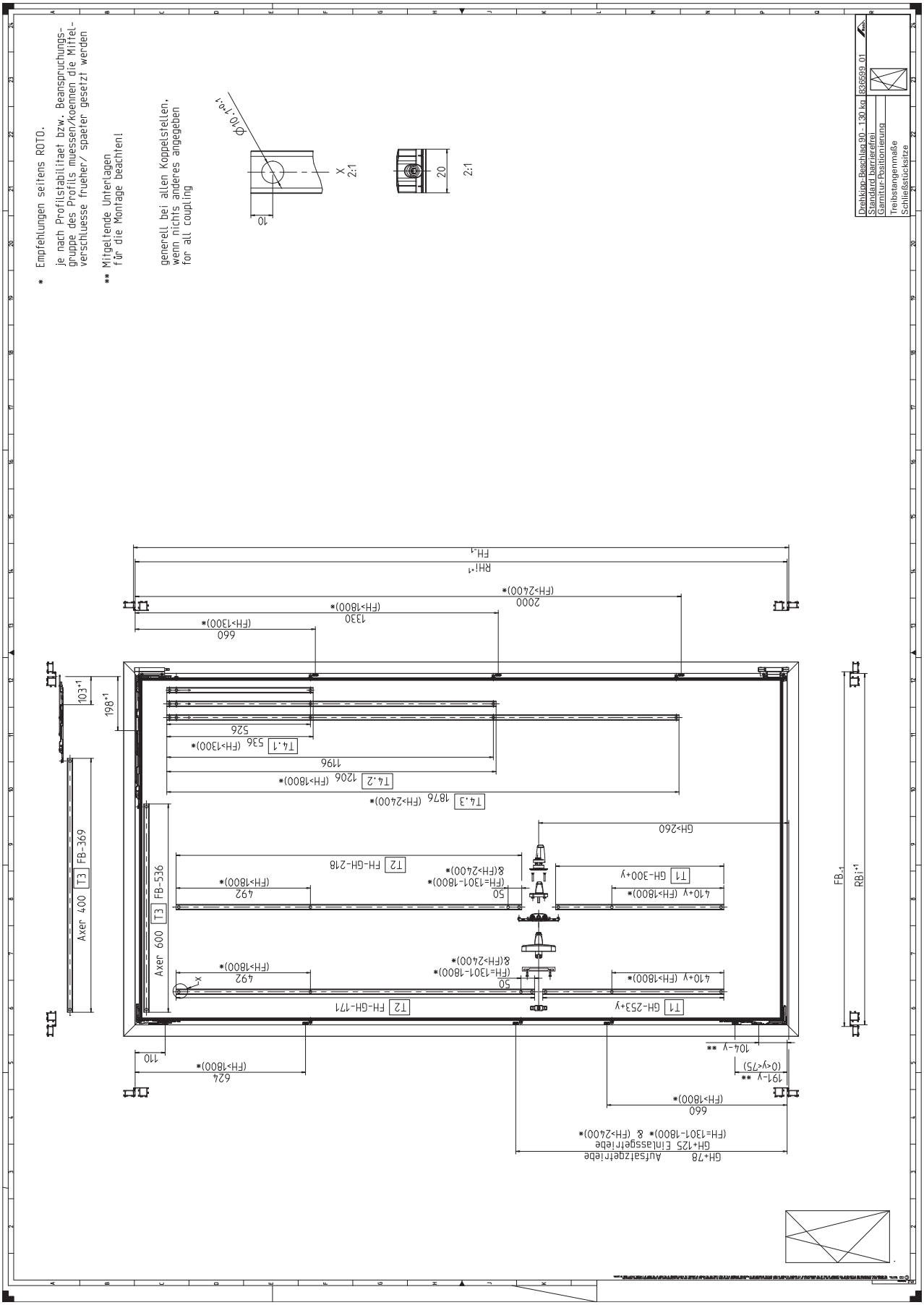

9.2.7 T&T | 160 kg

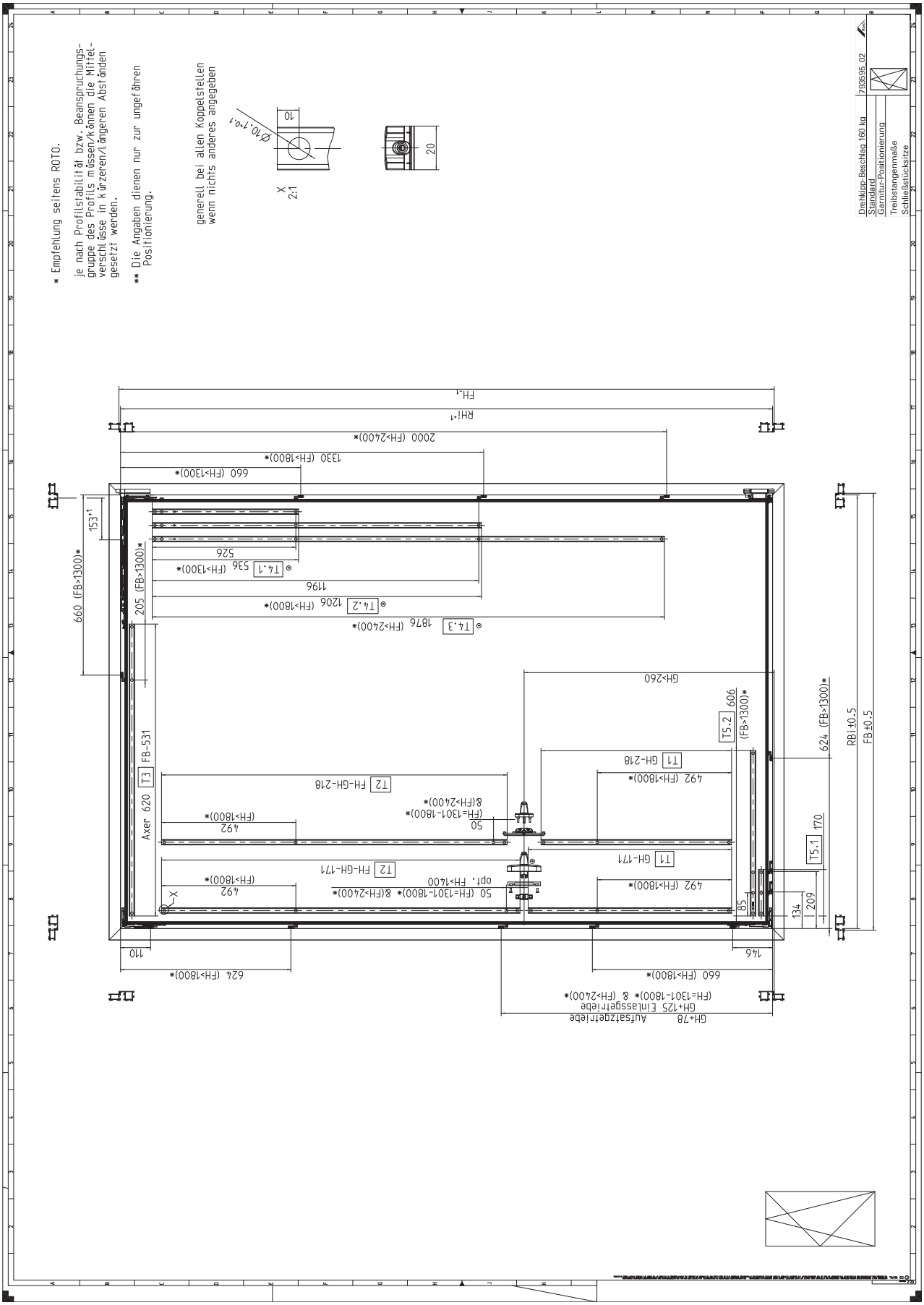
* Empfehlung seitens ROTO.
je nach Profilstabilität bzw. Beanspruchungsgruppe des Profils müssen/können die Mittelverschlüsse in kürzeren/längeren Abständen gesetzt werden.
** Die Angaben dienen nur zur ungefähren Positionierung.
generell bei allen Koppelstellen wenn nichts anderes angegeben
Ø10,1+0,1
10
20
X
2:1
Drehkipp-Beschlag 160 kg
Standard
Garnitur-Positionierung
Treibstangenmaße
Schließstückesitze
793595 02
FH-1
RH-1
2000 (FH>2400)*
1330 (FH>1800)*
660 (FH>1300)*
153-1
660 (FB>1300)*
205 (FB>1300)*
526
T4.1 536 (FH>1300)*
1196
T4.2 1206 (FH>1800)*
T4.3 1876 (FH>2400)*
GH>260
T5.2 606 (FB>1300)*
624 (FB>1300)*
RB±0,5
FB±0,5
T1 GH-218
492 (FH>1800)*
T2 FH-GH-218
8(FH>2400)*
50 (FH=1301-1800)*
492 (FH>1800)*
Axer 620
T3 FB-531
T1 GH-171
T2 FH-GH-171
50 (FH=1301-1800)* 8(FH>2400)*
opt. FH>1400
492 (FH>1800)*
T5.1 170
85
134
209
146
110
624 (FH>1800)*
660 (FH>1800)*
GH+78 Aufsatzgetriebe
GH+125 Einlassgetriebe
(FH=1301-1800)* & (FH>2400)*

9.2.8 T&T | RC 2 | 160 kg

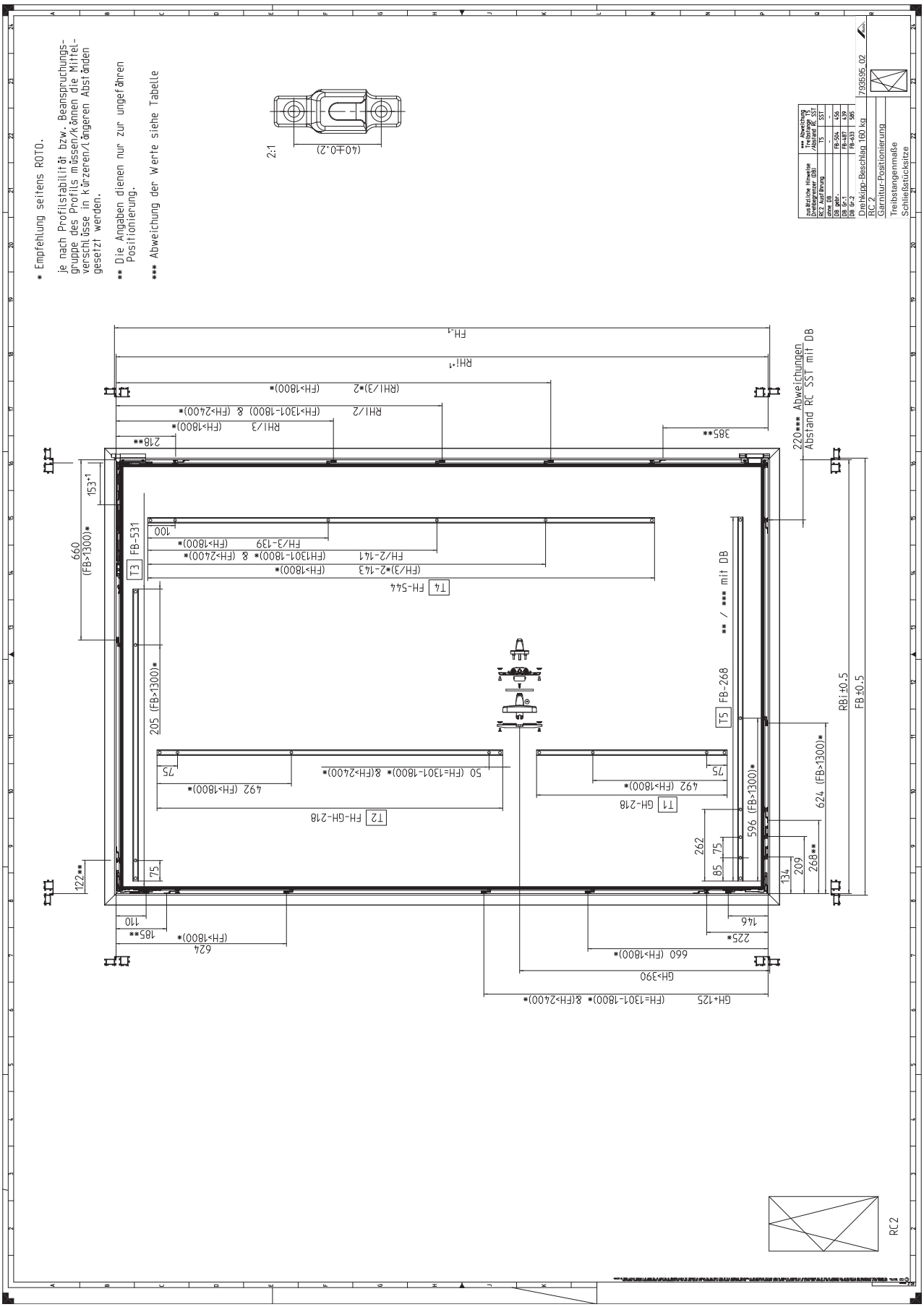

9.2.9 T&T | RC 3 | 160 kg

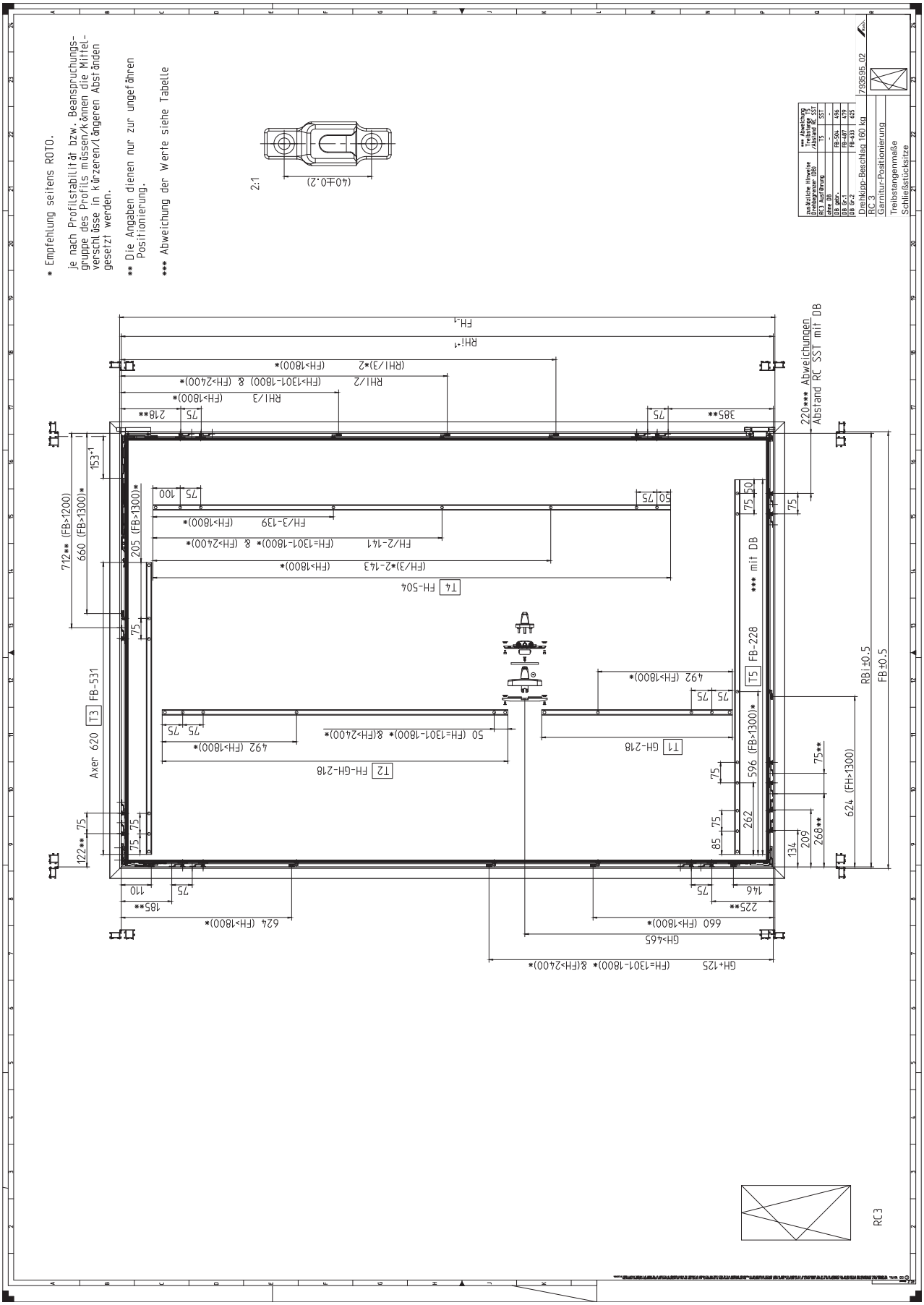

9.2.10 T&T additional stay arms | 160 kg

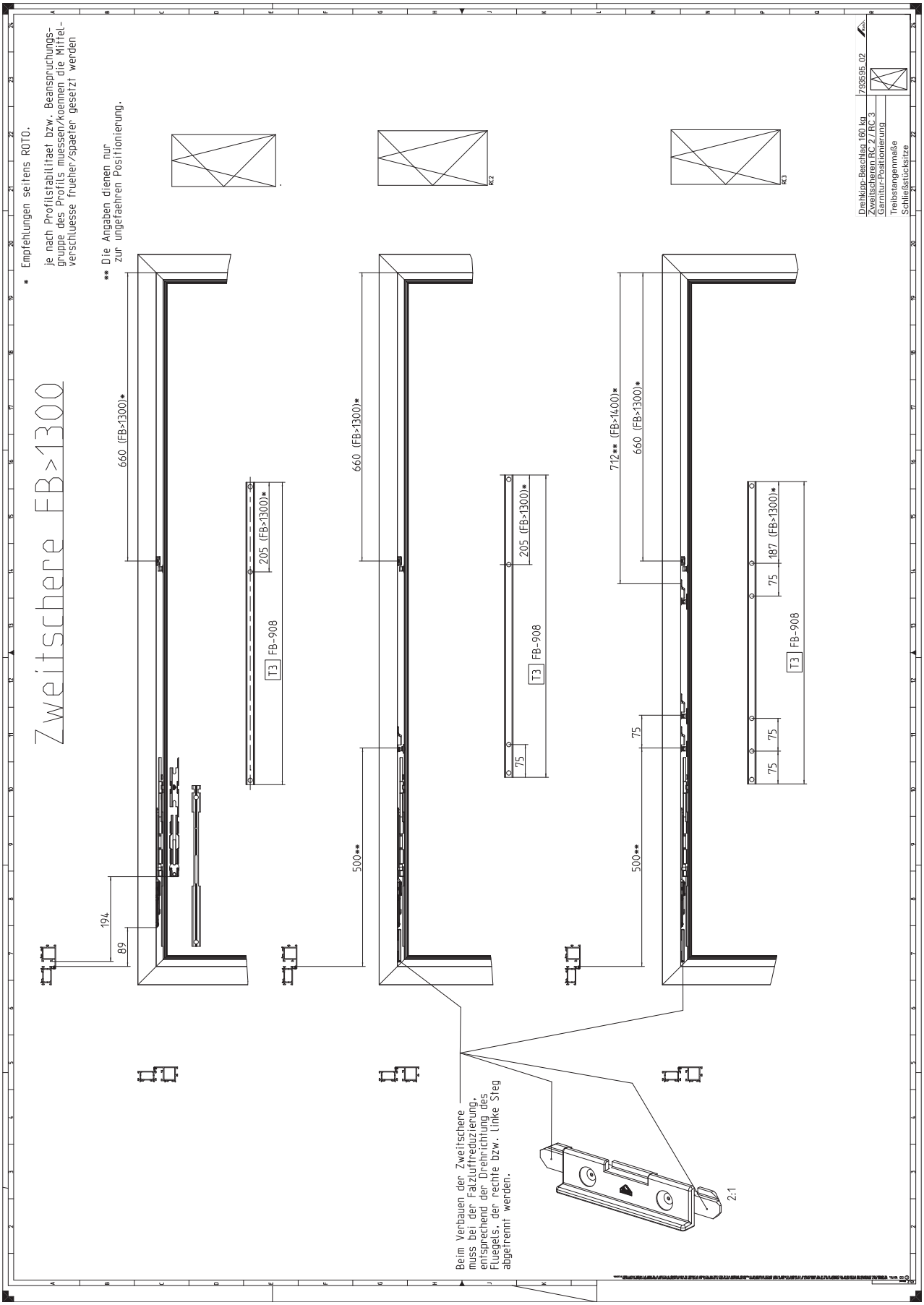

9.2.11 T&T | accessible | 160 kg

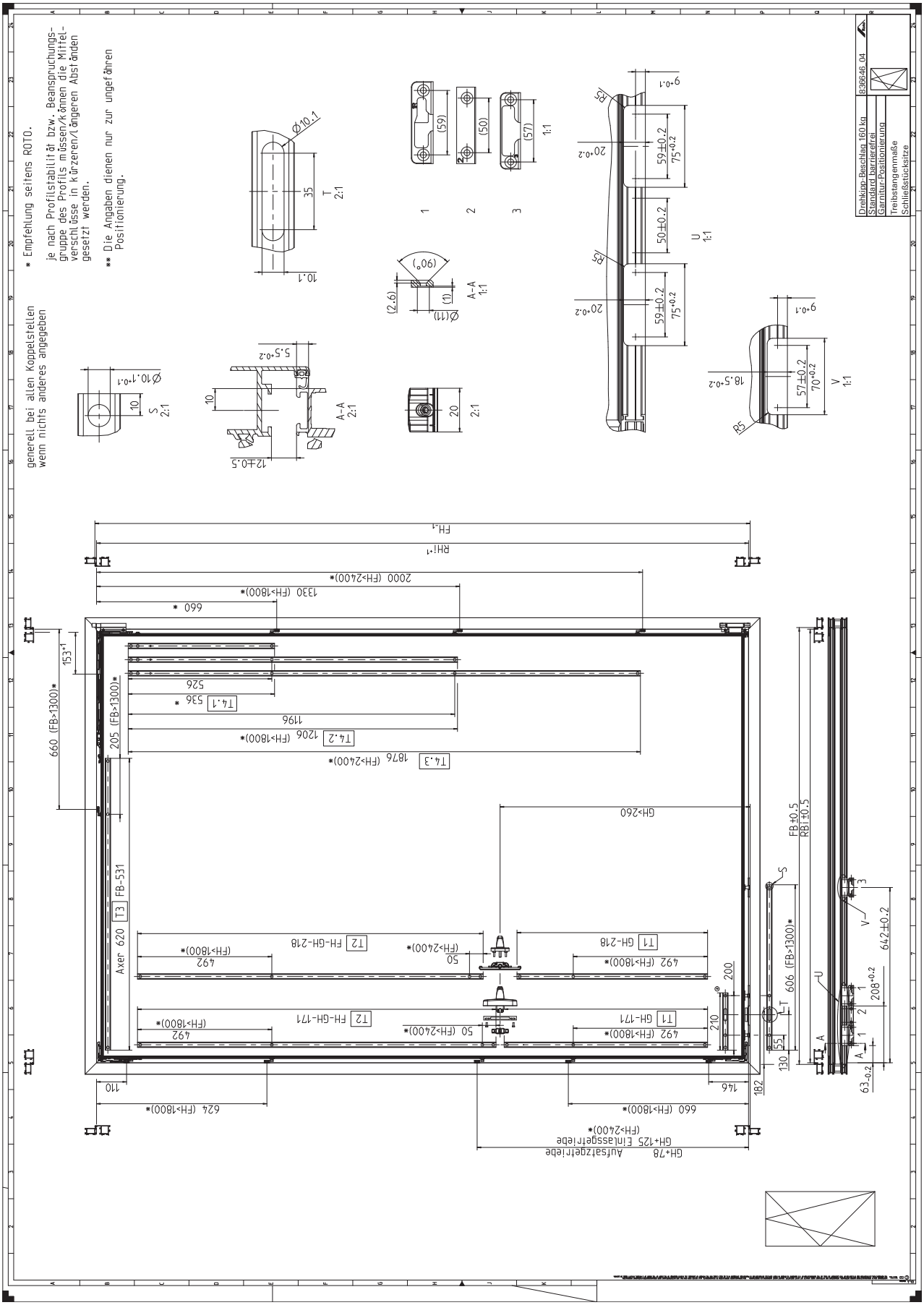

9.2.12 T&T | accessible | RC 2 | 160 kg

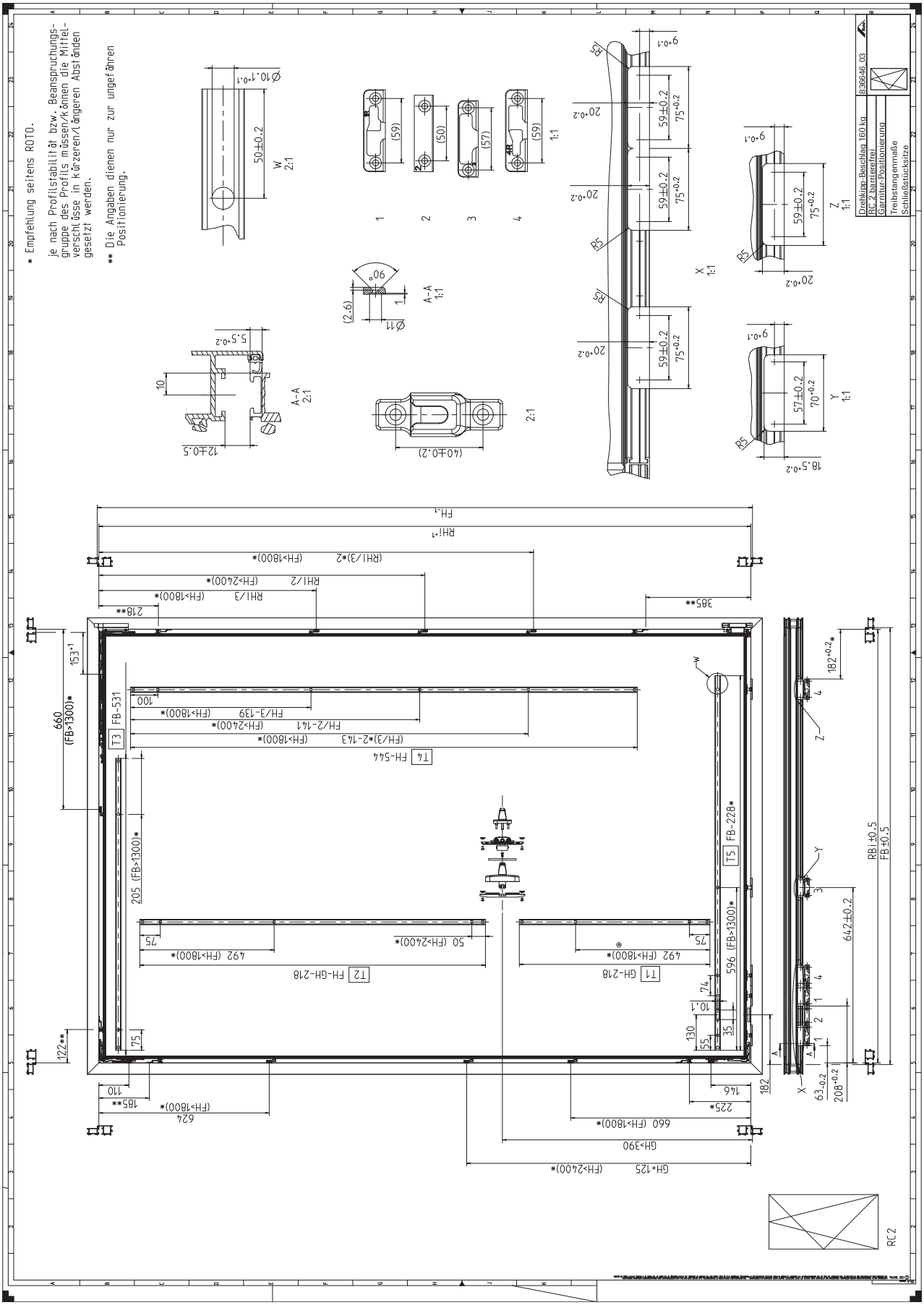

9.2.13 T&T | 200 kg

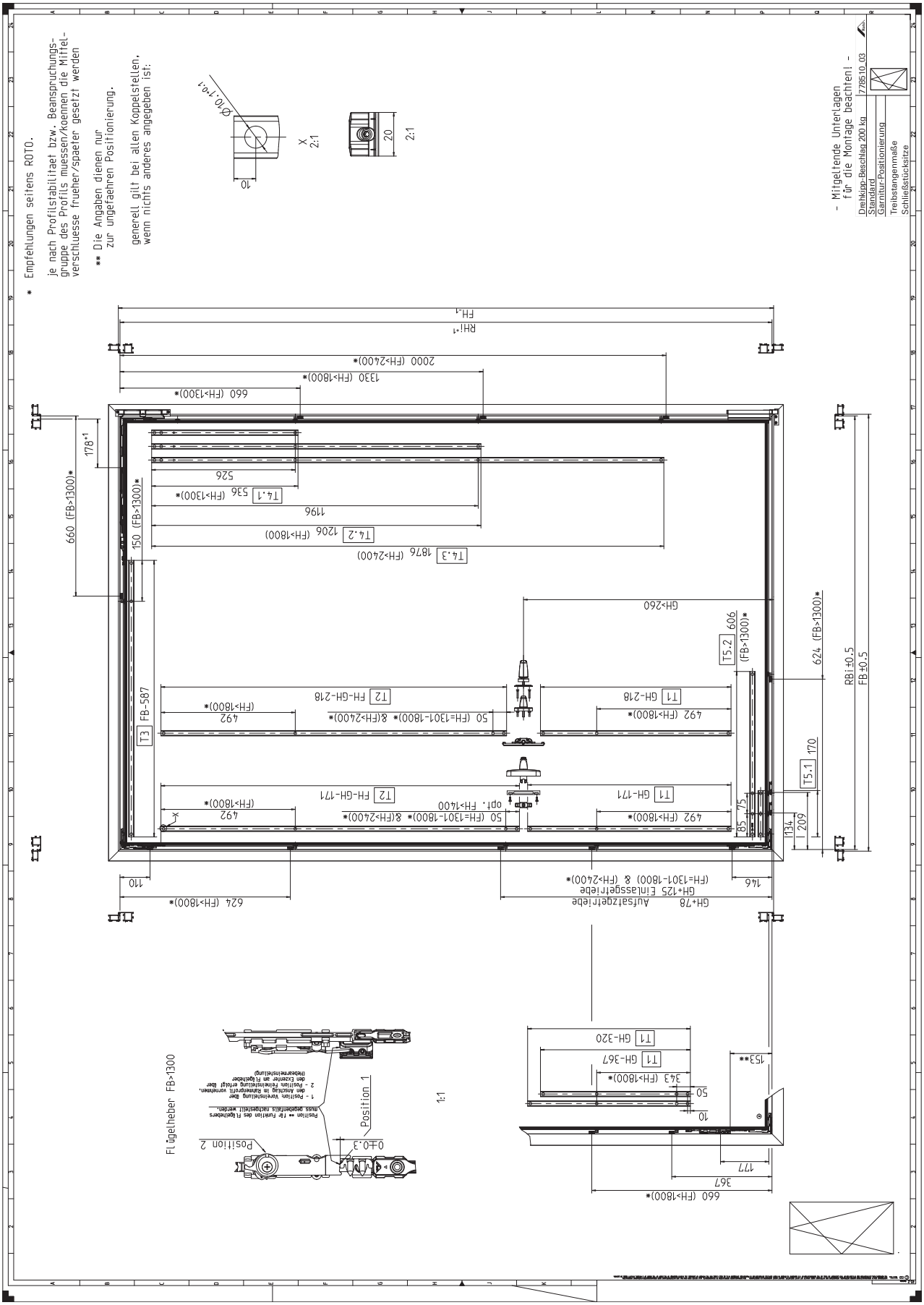

9.2.14 T&T | RC 2 | 200 kg

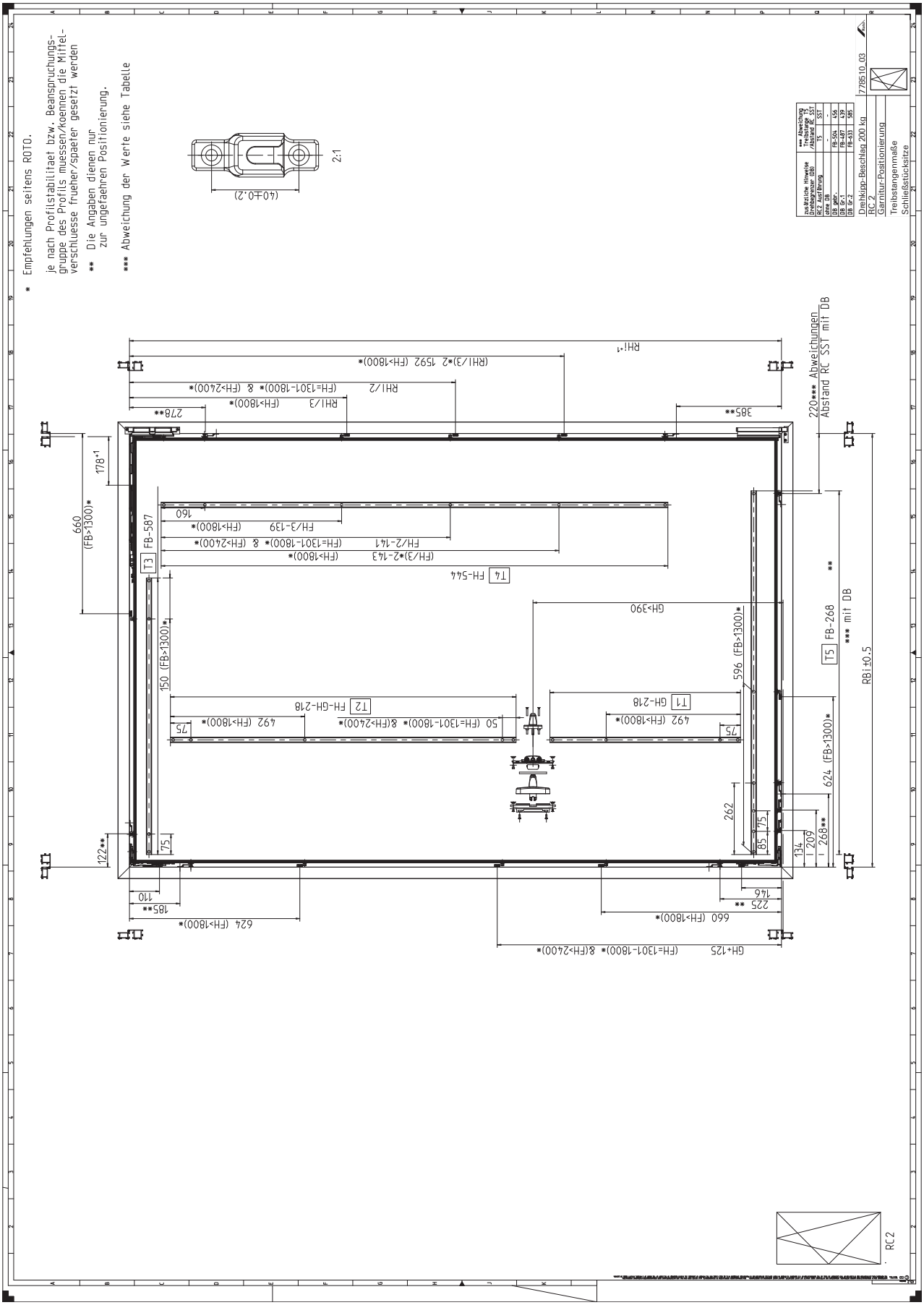

9.2.15 T&T | RC 3 | 200 kg

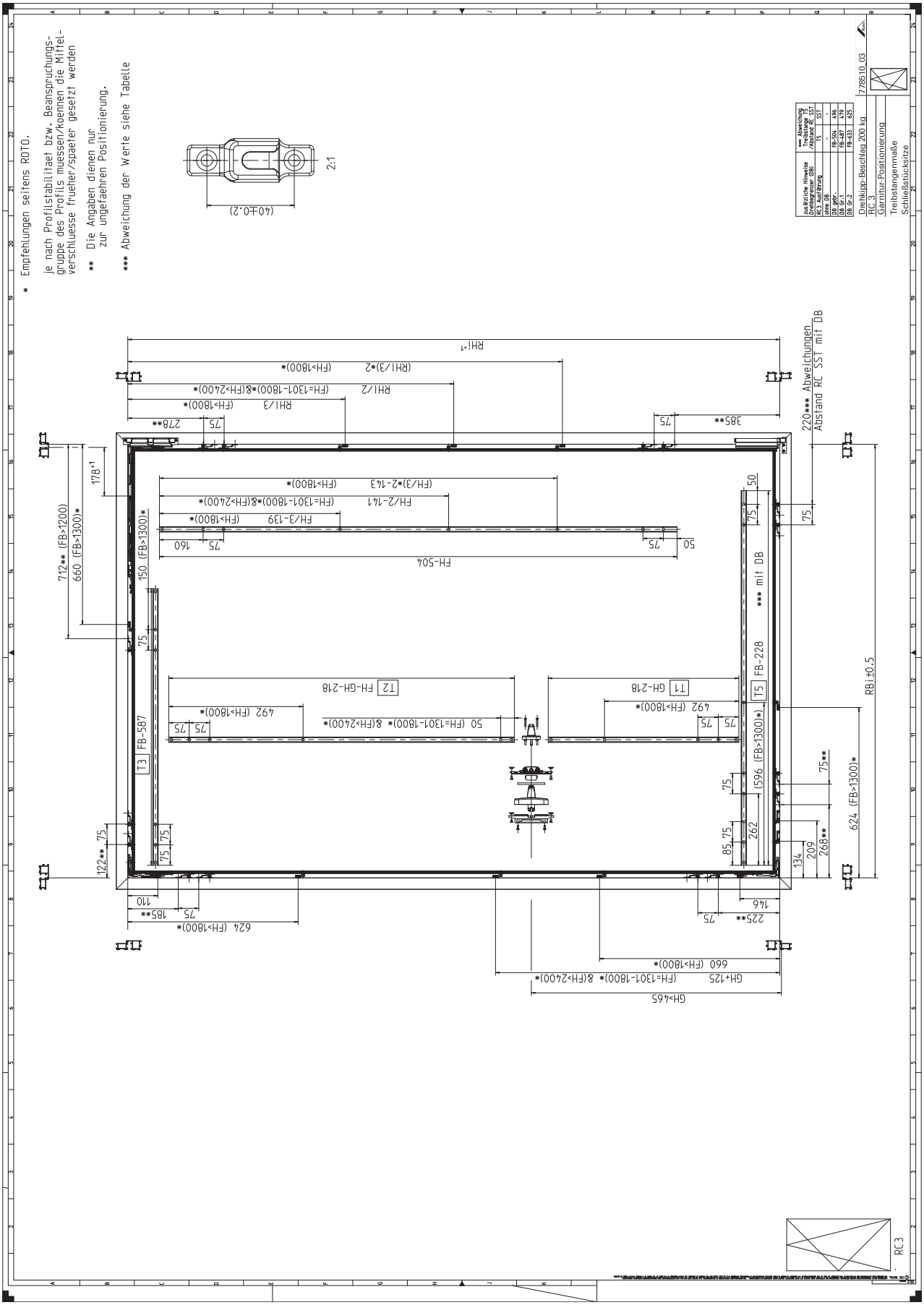

9.2.16 T&T additional stay arms | 200 kg

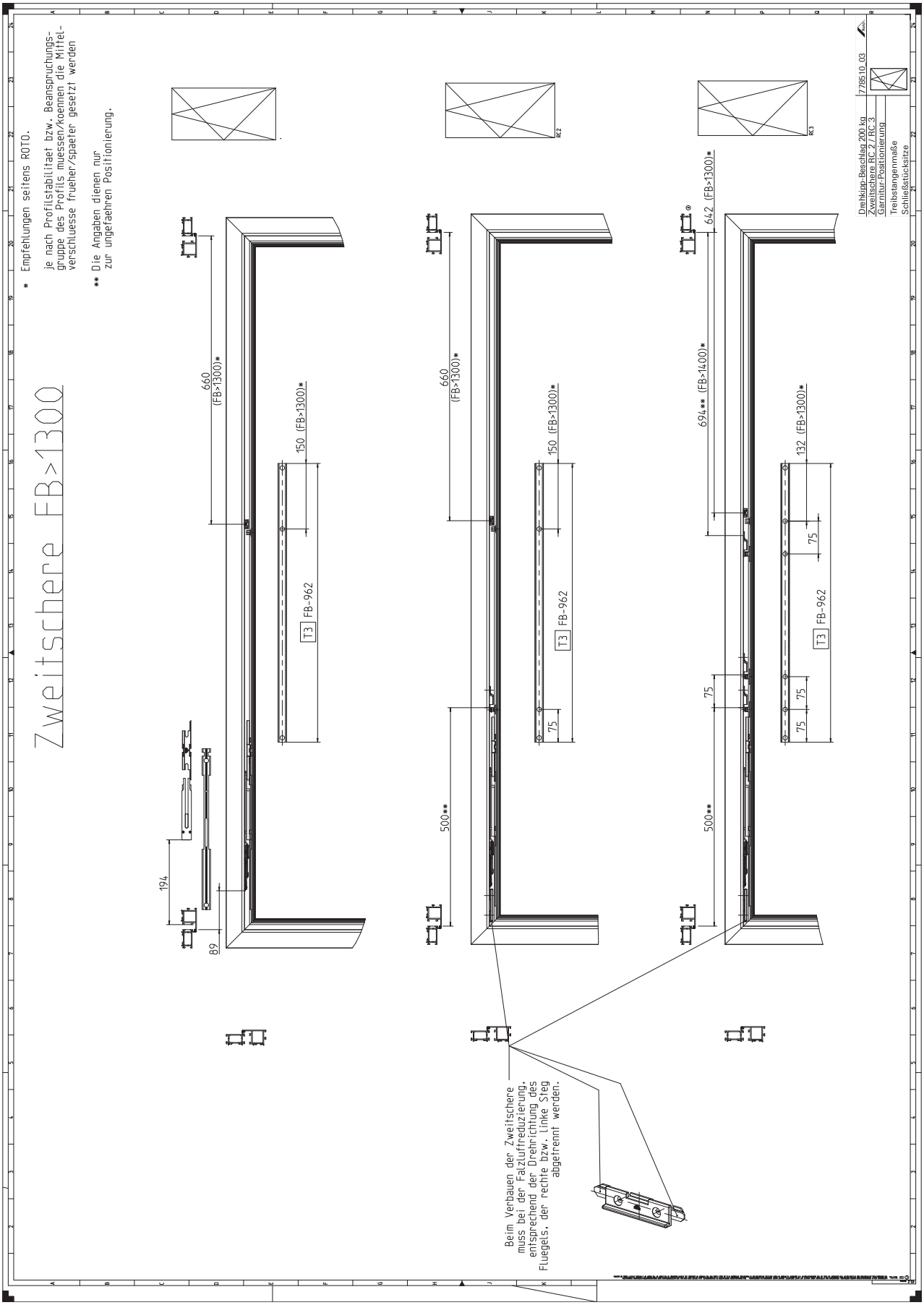

9.2.17 T&T night vent with additional stay arm

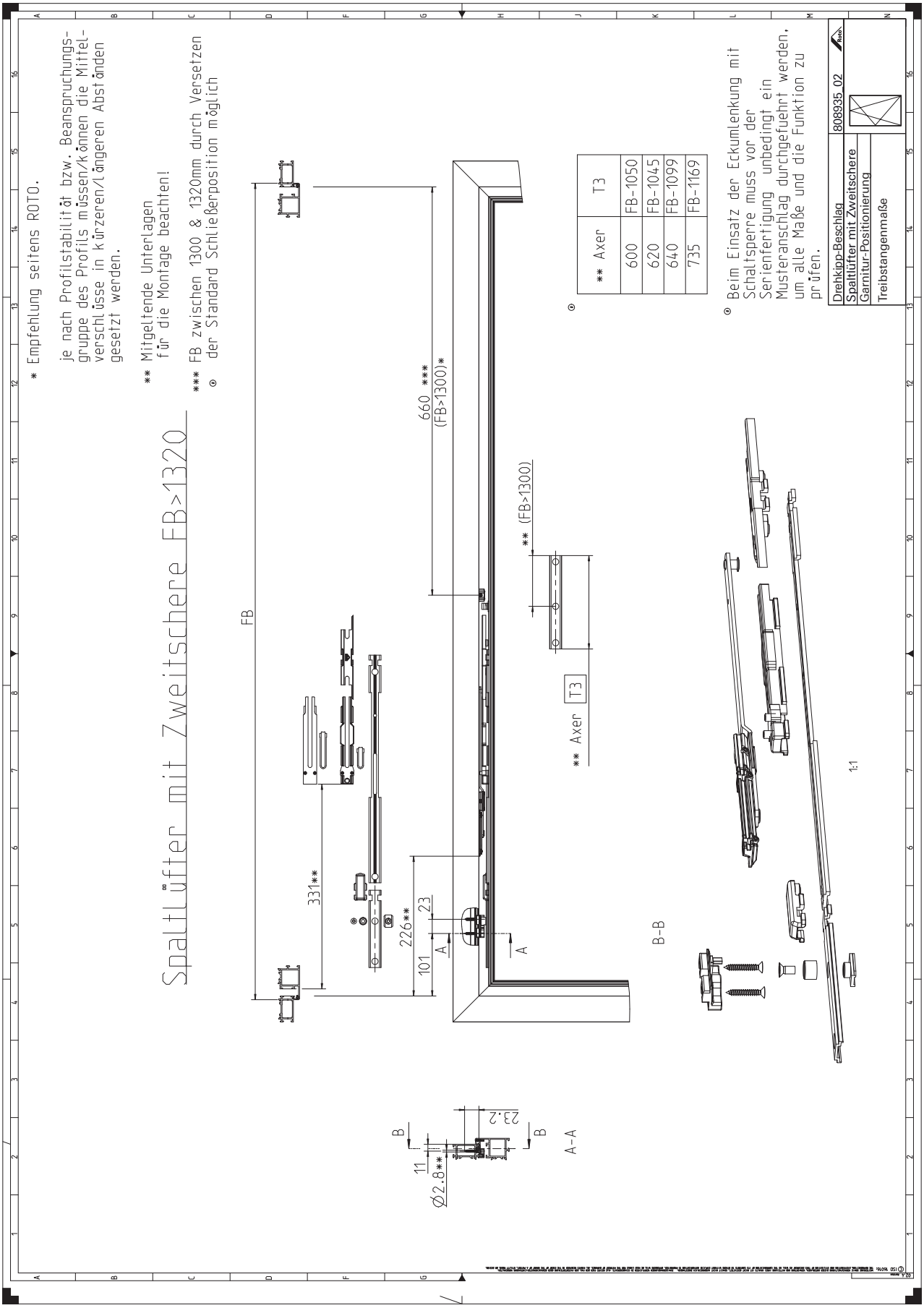

9.2.18 T&T night vent without additional stay arm

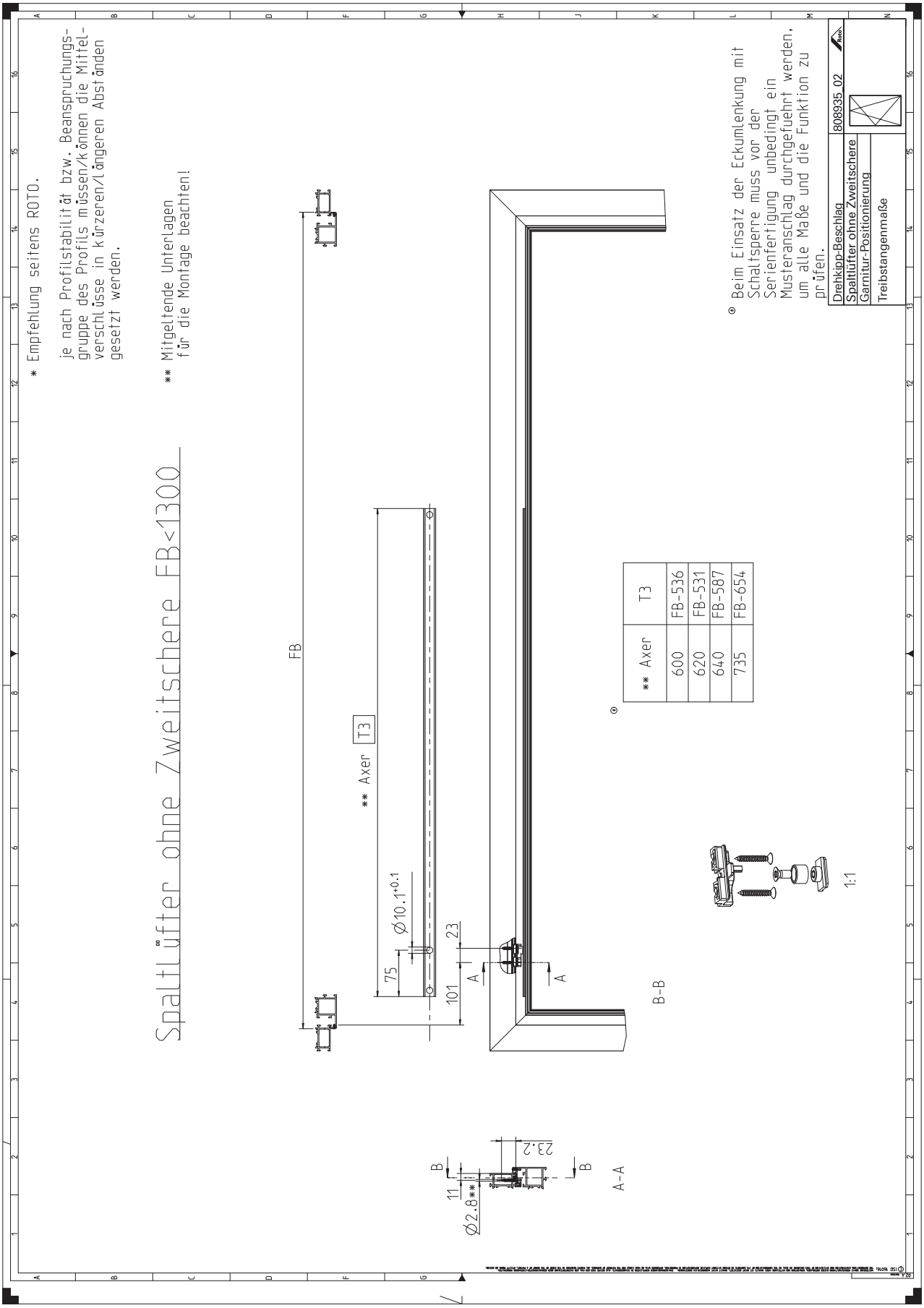

9.3 TiltFirst hardware

9.3.1 Explanation

The following markings are used in the installation drawings to emphasise references and other elements:

Marking	Translation
Abweichungen Abstand RC SST mit DB	Deviations from distance RC striker with turn restrictor
Abweichung Treibstange T5 / Abstand RC SST	Deviation from connecting rod CR5 / distance RC striker
Abweichung der Werte siehe Tabelle	Refer to the table for deviations in the values
Anwendungsbereich FH von 2700 bis 3000 mm, BD > 5 mm	Application range: sash height from 2700 to 3000 mm, hinge passage > 5 mm
Aufsatzgetriebe	Geared-handle
Axer	Sash stay
Beim Verbauen der Zweitschere muss bei der Falzluftreduzierung, entsprechend der Drehrichtung des Fluegels, der rechte bzw. linke Steg abgetrennt werden.	When fitting the additional stay arm, the right or left profile leg must be detached for rebate-clearance reduction depending on the direction of rotation of the sash.
DB gebr.	Braked turn restrictor
DB Gr. 1	Damped / braked turn restrictor size 1
DB Gr. 2	Damped / braked turn restrictor size 2
Die Angaben dienen nur zur ungefaehren Positionierung.	The information is for approximate positioning only.
Einlassgetriebe	Flush-encased gearbox
Empfehlungen seitens Roto : je nach Profilstabilitaet bzw. Beanspruchungsgruppe des Profils muessen / koennen die Mittel-verschluesse frueher / spaeter gesetzt werden.	Recommendations from Roto: depending on the profile stability or profile loading group, the centre locks must / can be put in place at an earlier / later point.
FB	Sash width
FH	Sash height
Flügelheber	Sash lifter
Garnitur-Positionierung	Set positioning
generell bei allen Koppelstellen, wenn nichts anderes angegeben	Generally for all coupling points, unless otherwise specified
GH	Handle height
mit DB	With turn restrictor
Mitgeltende Unterlagen für die Montage beachten!	Comply with the other applicable documents for installation.
ohne DB	Without turn restrictor
Position	Position
Position ** für Funktion des Flügelhebers muss gegebenenfalls nachgestellt werden.	The position ** may have to be readjusted to enable the sash lifter to work properly.
RBi	Frame width, internal
RC... Ausführung	RC... version
RHi	Frame height, internal
Schließstücksitze	Striker positions
Standard	Standard
TiltFirst-Beschlag	TiltFirst hardware
Treibstangenmaße	Connecting rod dimensions
zusätzliche Hinweise Drehbegrenzer (DB)	Additional information on the turn restrictor (TR)
Zweitschere	Additional stay arm
1 - Position: Voreinstellung über den Anschlag im Rahmenprofil vornehmen.	1 – position: perform presetting via the stop in the frame profile.
2 - Position: Feineinstellung erfolgt über den Exzenter am Flügel-heber (Hebearmeinstellung)	2 – position: precision adjustment is performed via the eccentric on the sash lifter (lift arm adjustment)

9.3.2 TF | 90 - 130 kg

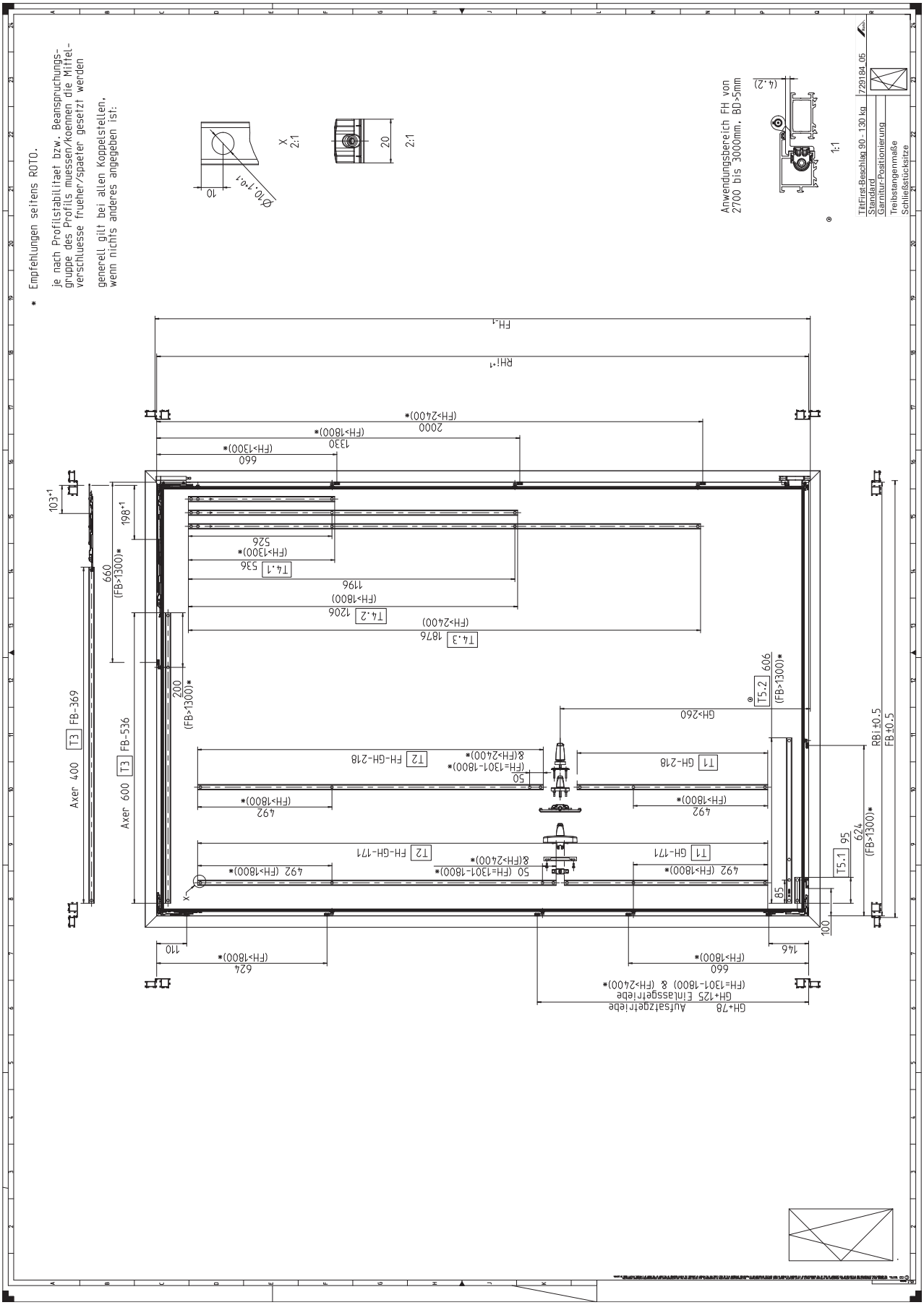

9.3.3 TF | RC 2 | 90 - 130 kg

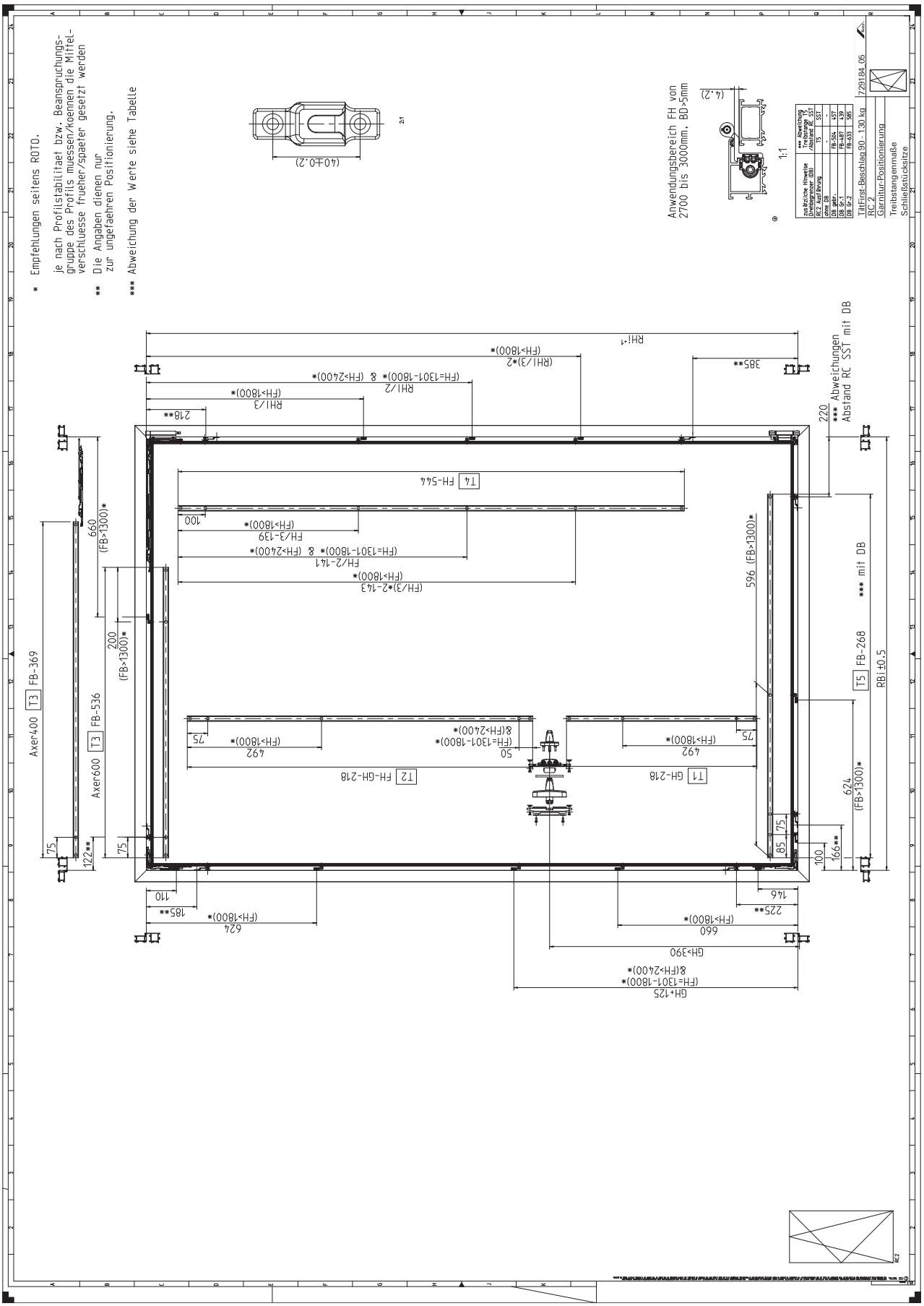

9.3.4 TF | RC 3 | 90 - 130 kg

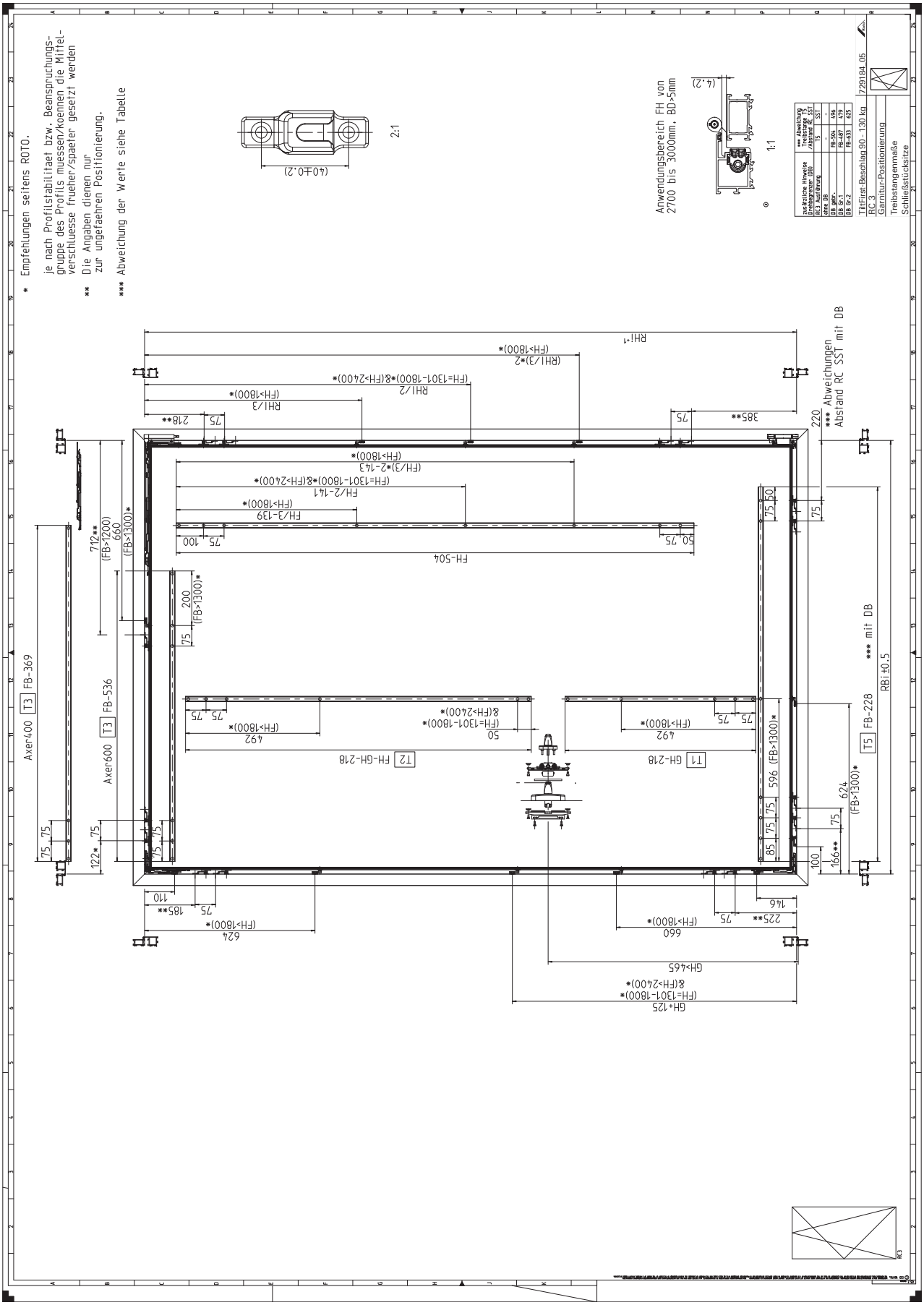

9.3.5 TF additional stay arms | 90 - 130 kg

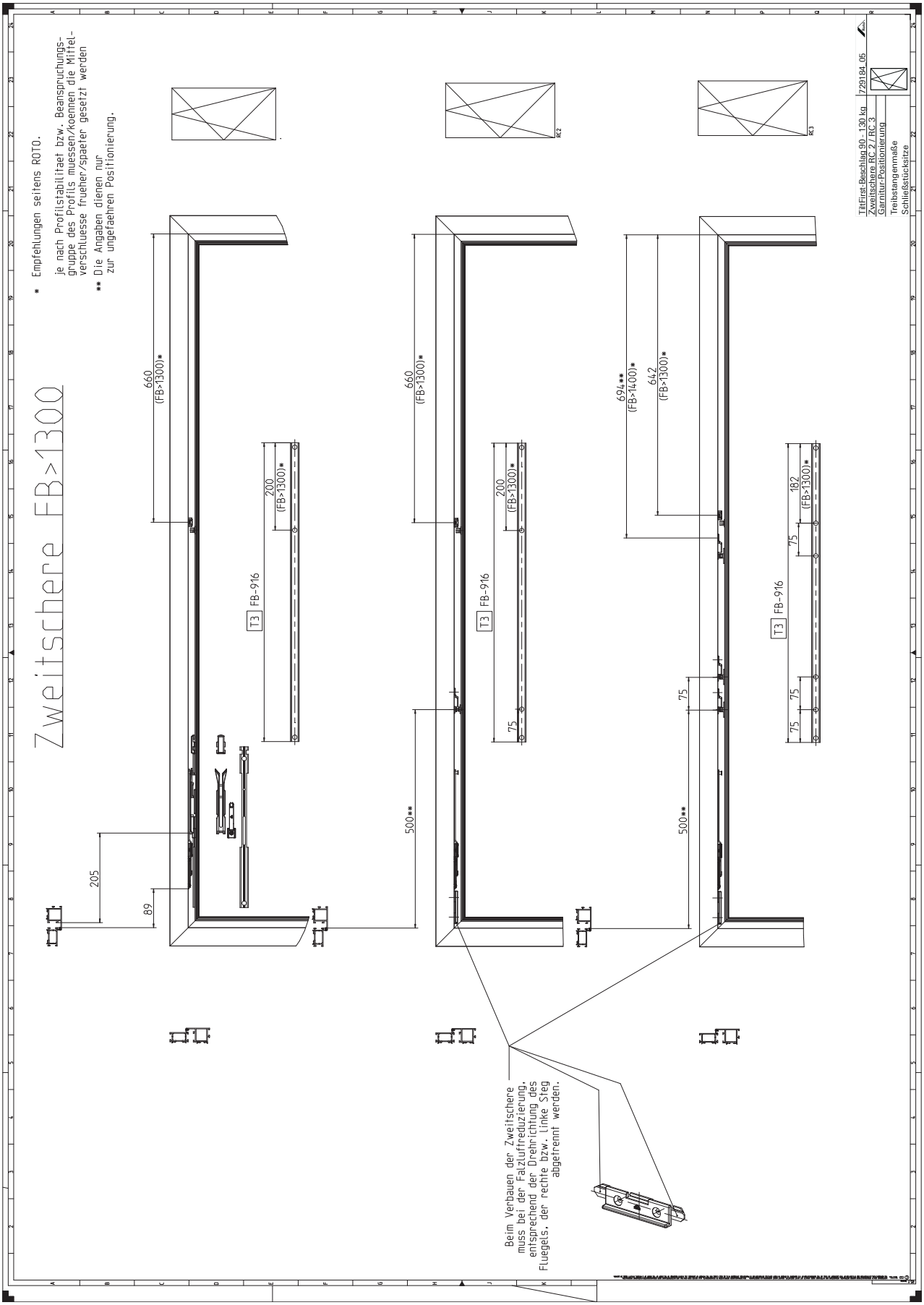

9.3.6 TF | 160 kg

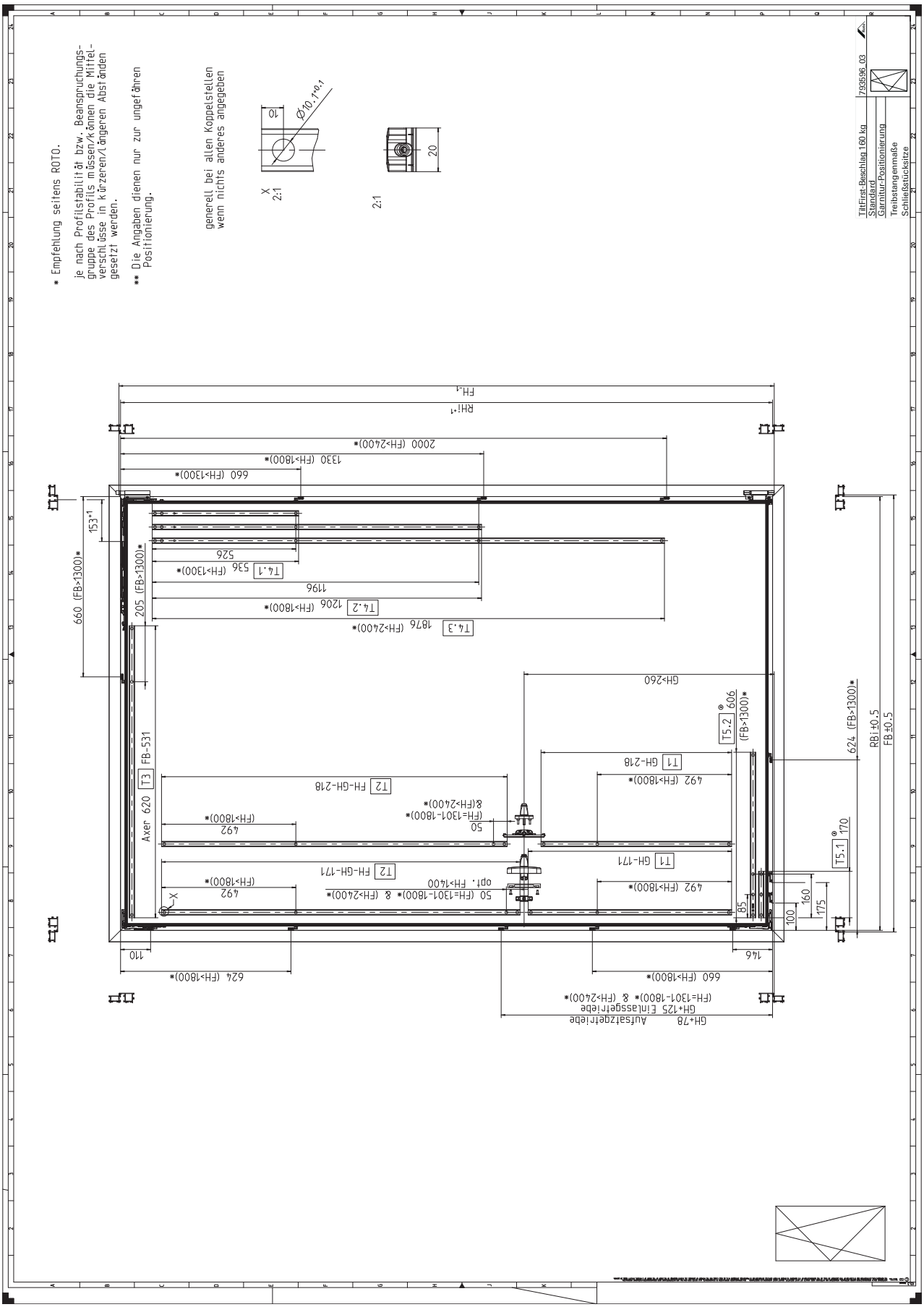
* Empfehlung seitens ROTO.
je nach Profilstabilität bzw. Beanspruchungsgruppe des Profils müssen/können die Mittelverschlüsse in kürzeren/längeren Abständen gesetzt werden.
** Die Angaben dienen nur zur ungefähren Positionierung.
generell bei allen Koppelstellen wenn nichts anderes angegeben
TiltFirst-Beschlag 160 kg
Standard
Garnitur-Positionierung
Treibstangenmaße
Schließstückersitze
7935596 03
FH-1
RH-1
2000 (FH>2400)*
1330 (FH>1800)*
660 (FH>1300)*
153-1
660 (FB>1300)*
205 (FB>1300)*
526
T4.1 536 (FH>1300)*
1196
T4.2 1206 (FH>1800)*
T4.3 1876 (FH>2400)*
GH>260
T5.2 606 (FB>1300)*
624 (FB>1300)*
RBi ±0.5
FB ±0.5
T1 GH-218
492 (FH>1800)*
T2 FH-GH-218
Axer 620 T3 FB-531
492 (FH>1800)*
50 (FH=1301-1800)* & (FH>2400)*
T1 GH-171
T5.1 170
T2 FH-GH-171
492 (FH>1800)*
50 (FH=1301-1800)* & (FH>2400)*
opt. FH>1400
85
100
160
175
110
624 (FH>1800)*
146
660 (FH>1800)*
GH+78 Aufsatzgetriebe
GH+125 Einlassgetriebe
(FH=1301-1800)* & (FH>2400)*

9.3.7 TF | RC 2 | 160 kg

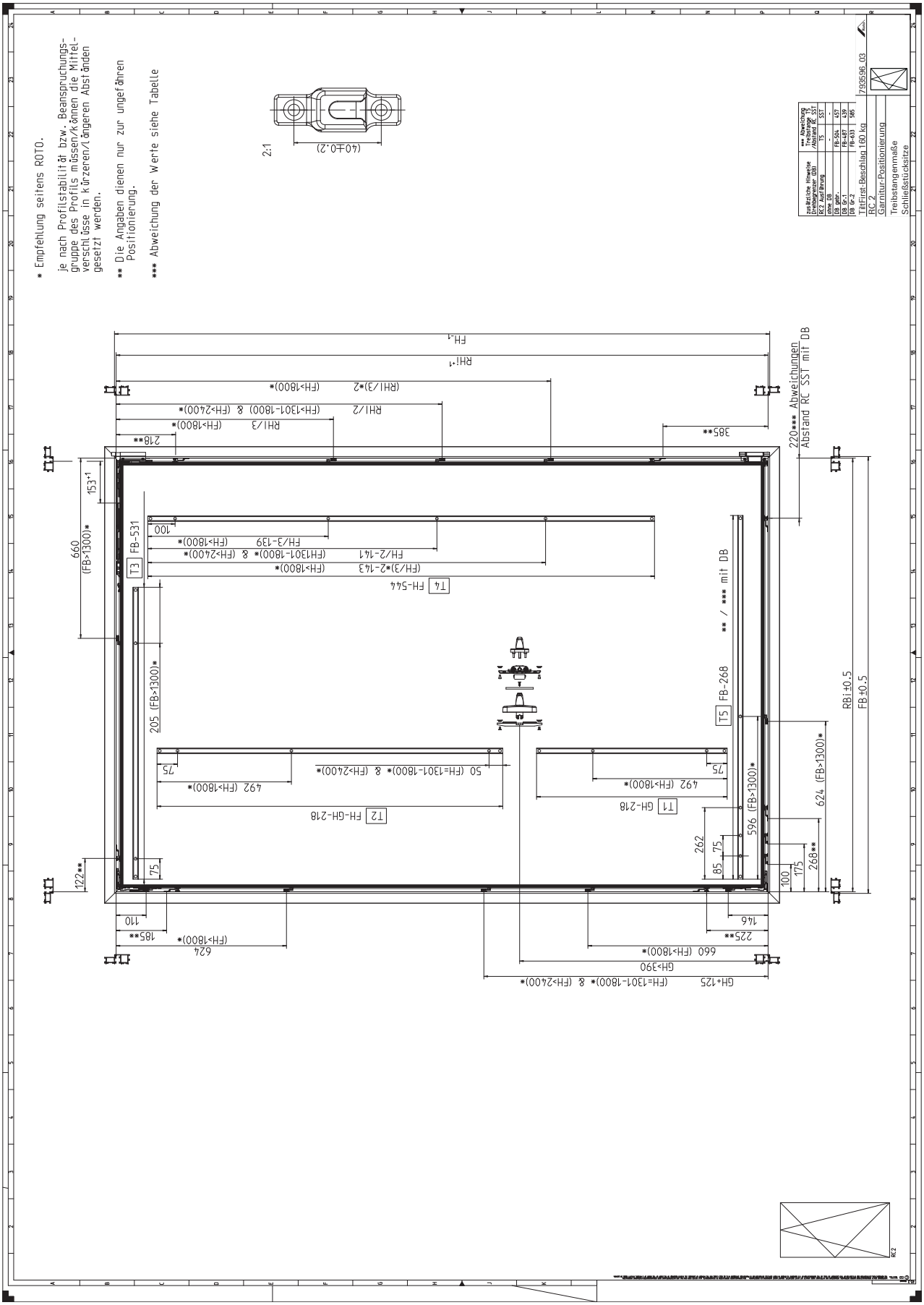

9.3.8 TF | RC 3 | 160 kg

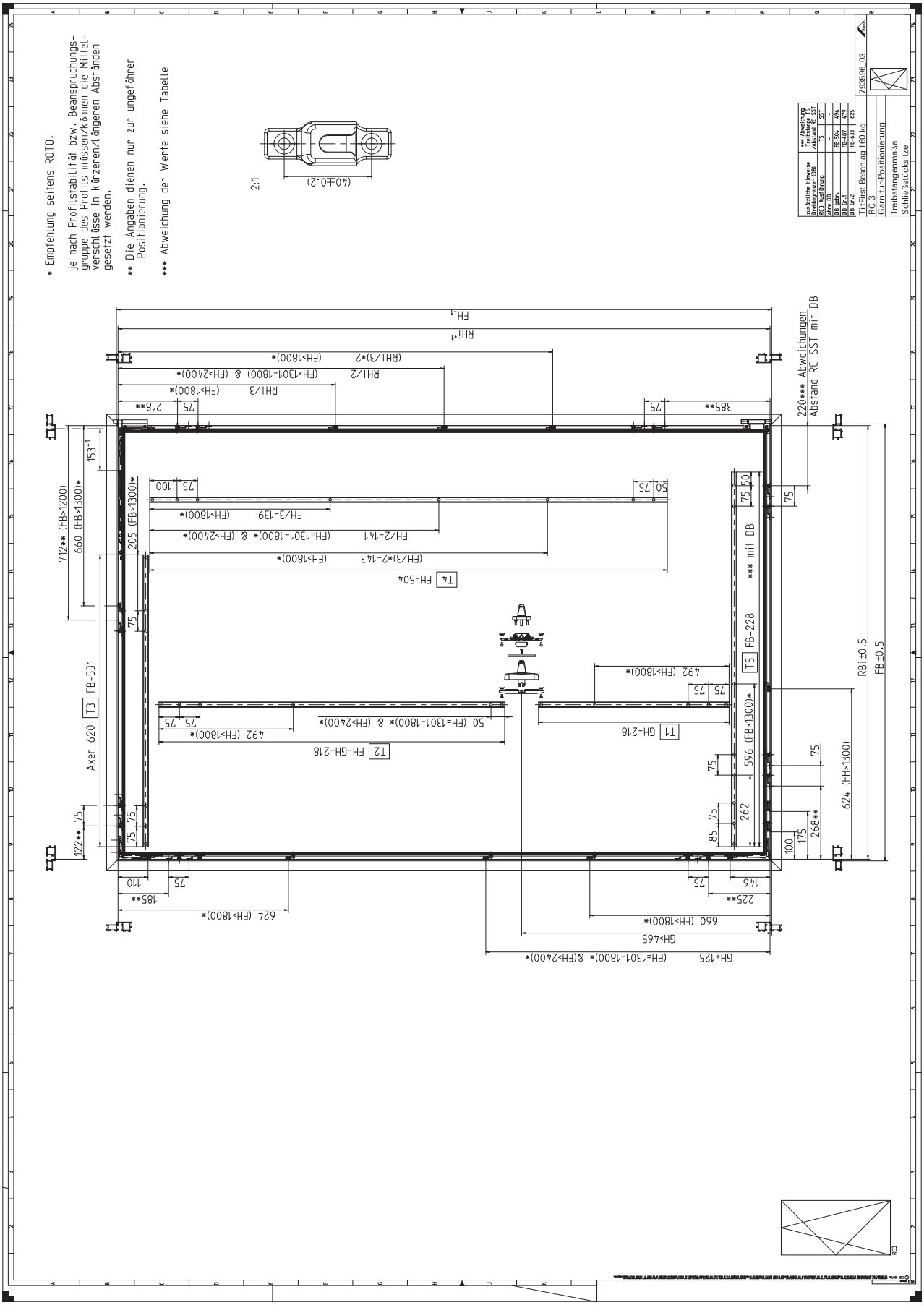

9.3.9 TF additional stay arms | 160 kg

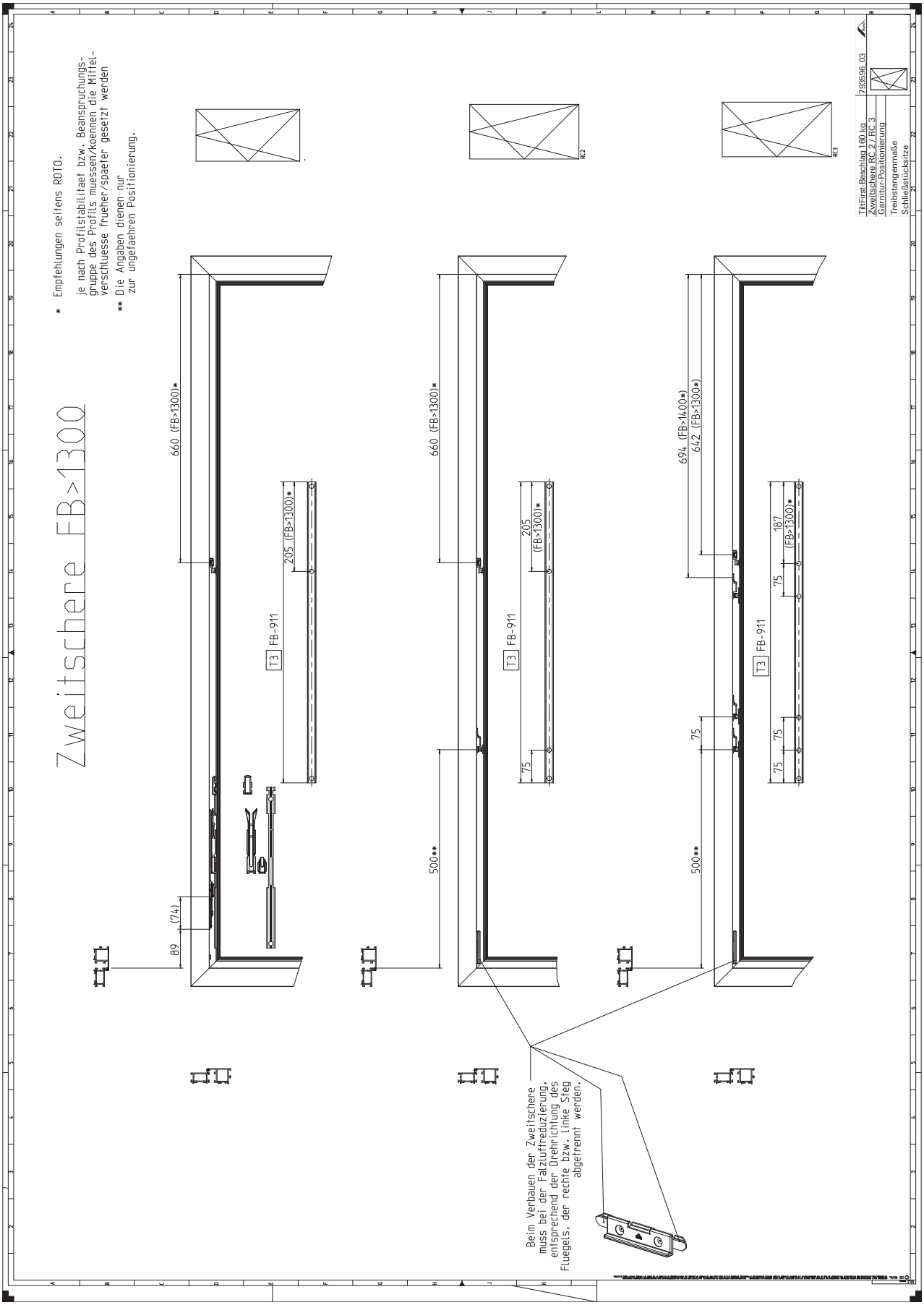

9.3.10 TF | 200 kg

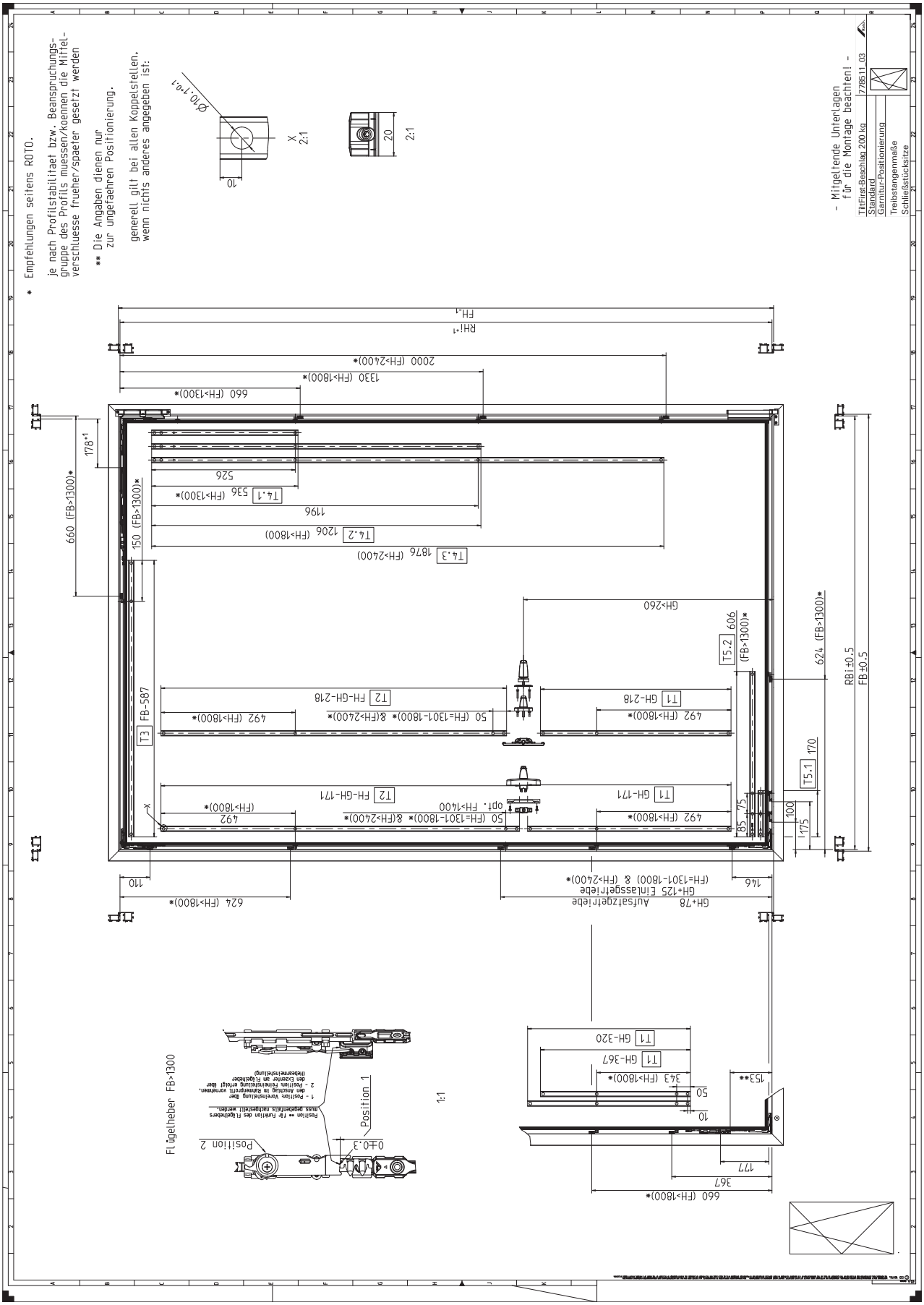

9.3.11 TF | RC 2 | 200 kg

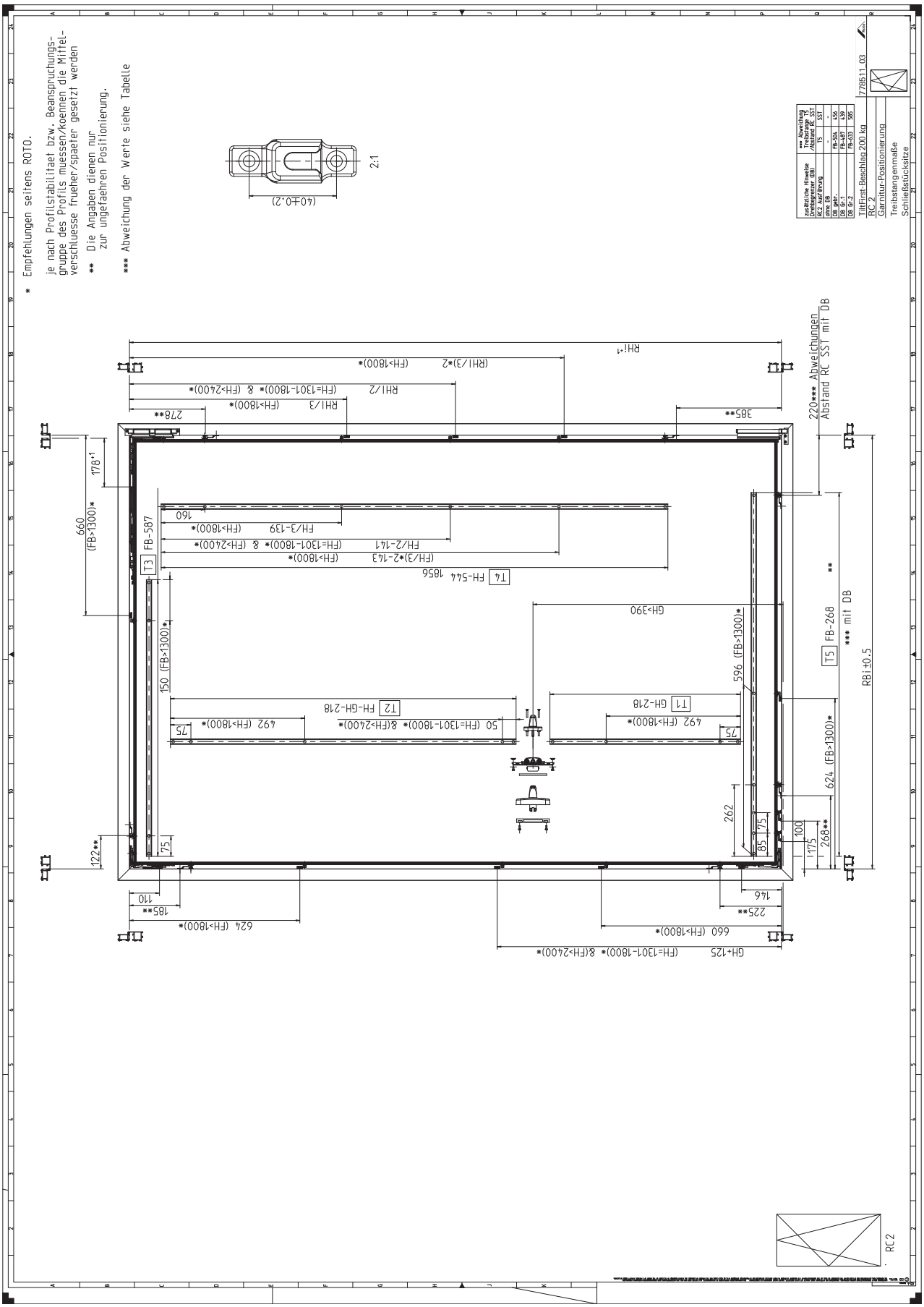

9.3.12 TF | RC 3 | 200 kg

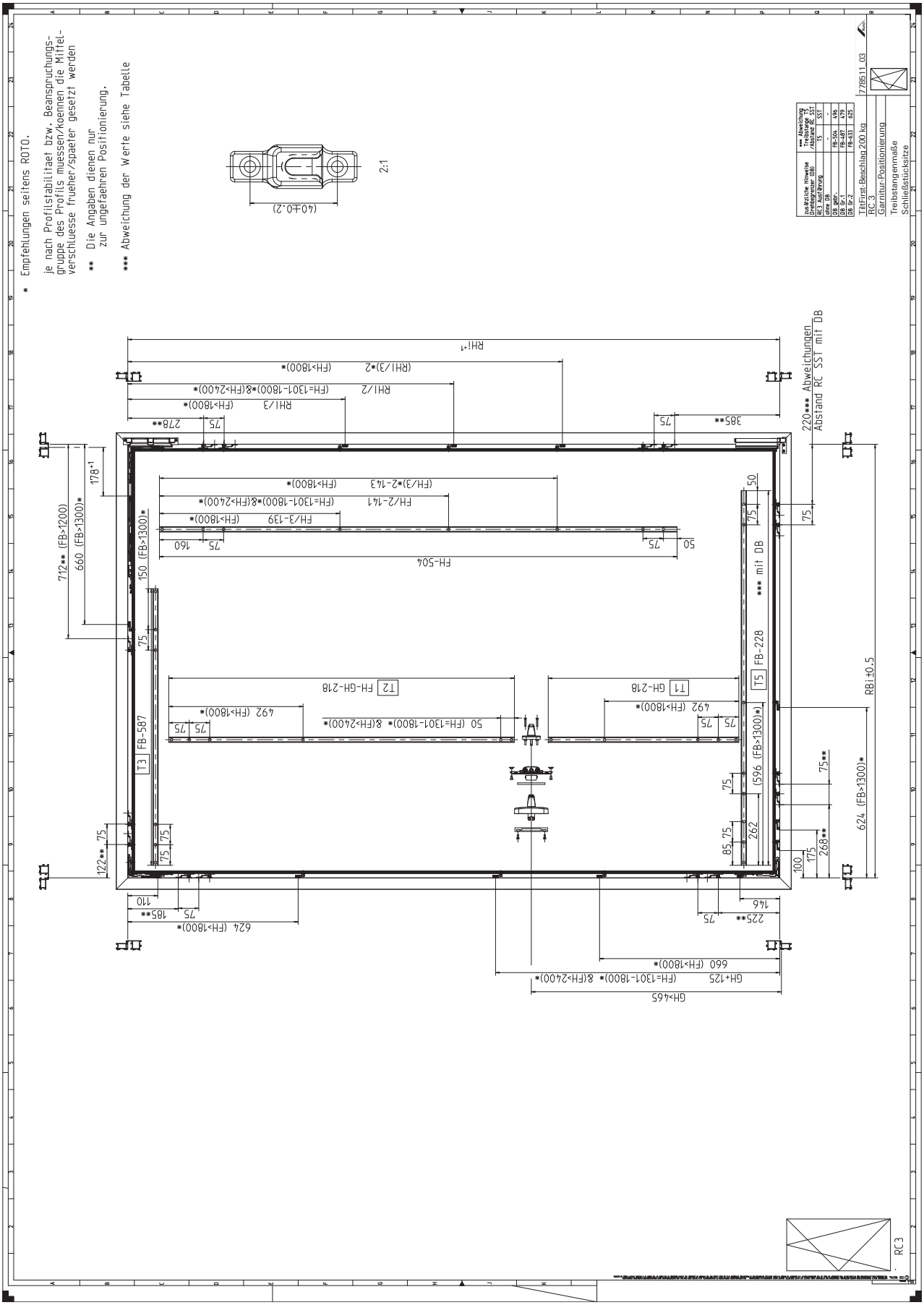

9.3.13 TF additional stay arms | 200 kg

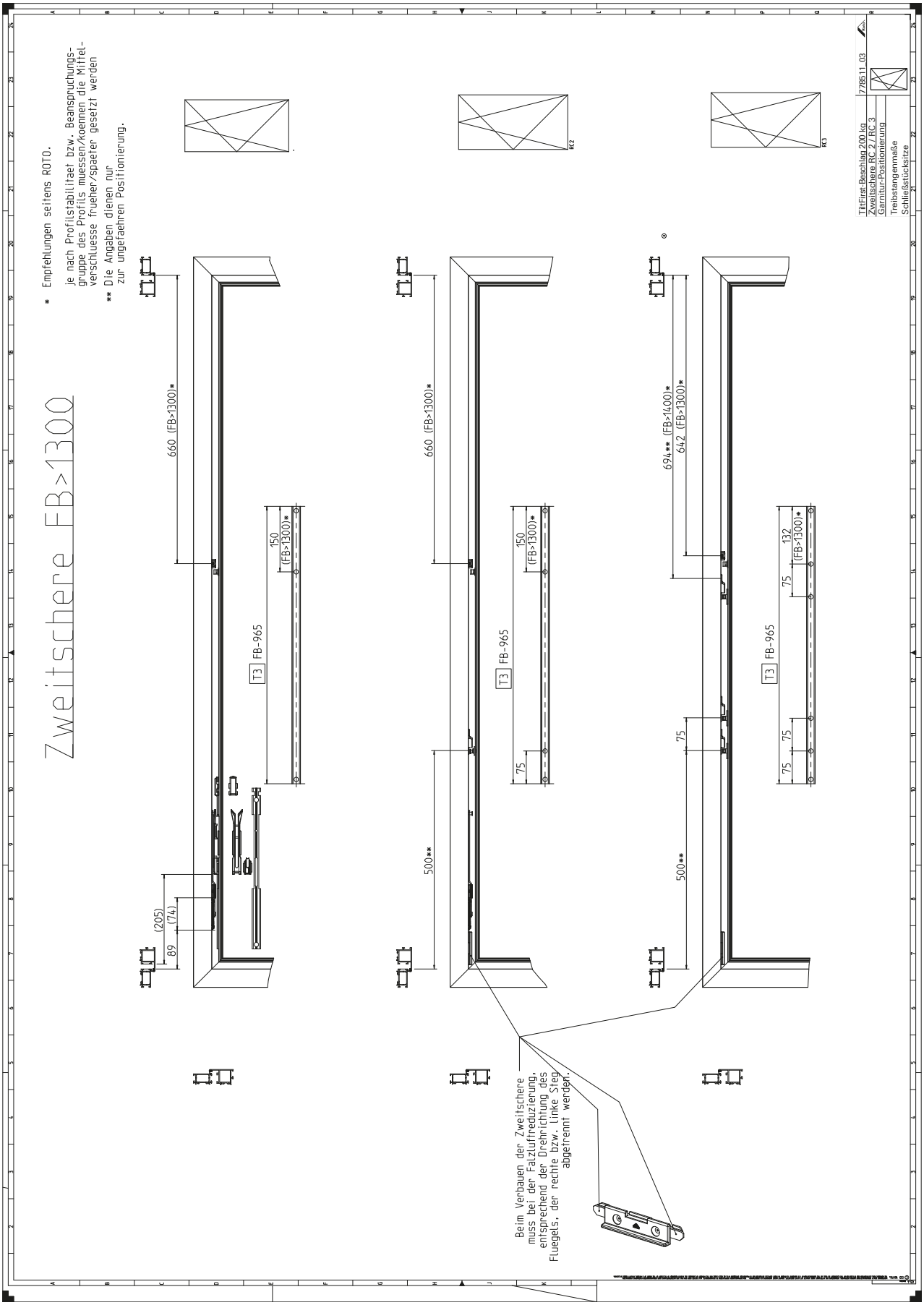

9.4 Turn-Only hardware

9.4.1 Explanation

The following markings are used in the installation drawings to emphasise references and other elements:

Marking	Translation
Abweichung Treibstange T5 / Abstand RC SST	Deviation from connecting rod CR5 / distance RC ST
Alle Schrauben für die Lagerbefestigung müssen in mindestens 8 mm Wandstärke eingeschraubt werden.	All screws for securing the bearing must be inserted up to a wall thickness of at least 8 mm.
Anwendungsbereich FH von 2700 bis 3000 mm, BD > 5 mm	Application range: sash height from 2700 to 3000 mm, hinge passage > 5 mm
Aufsatzgetriebe	Geared-handle
Bandseiten-Positionierung	Hinge side positioning
barrierefrei	Accessible
Darstellung Schließpunkt	Locking point diagram
DB	Turn restrictor
DB gebr.	Braked turn restrictor
DB Gr. 1	Damped / braked turn restrictor size 1
DB Gr. 2	Damped / braked turn restrictor size 2
DF-C-Bandseite	Turn-Only comfort hinge side
DF EU Band	Turn-Only with CD hinge
Die Angaben dienen nur zur ungefaehren Positionierung.	The information is for approximate positioning only.
Dreh-Bandseite	Turn-Only hinge side
Dreh-Beschlag	Turn-Only hardware
Dreh-Beschlag Comfort	Turn-Only hardware, comfort
Einlassgetriebe	Flush-encased gearbox
Empfehlungen seitens Roto : je nach Profilstabilitaet bzw. Beanspruchungsgruppe des Profils muessen / koennen die Mittel-verschluesse frueher / spaeter gesetzt werden.	Recommendations from Roto: depending on the profile stability or profile loading group, the centre locks must / can be put in place at an earlier / later point.
Ergänzende Unterlagen: Einbauzeichnungen ST	Additional documents: floating mullion installation drawings
EU-Band	CD hinge
FB	Sash width
FH	Sash height
Flügelheber	Sash lifter
für alle Widerstandsklassen	For all resistance classes
Garnitur-Positionierung	Set positioning
generell bei allen Koppelstellen, wenn nichts anderes angegeben	Generally for all coupling points, unless otherwise specified
GH	Handle height
Mindesteinschraubtiefe Optionale Befestigung mit 2 zusätzlichen Schrauben	Minimum screw-in depth Optional fastening with two additional screws
Mindesteinschraubtiefe Befestigung mit 6 Senkschrauben ST4,8 x 19	Minimum screw-in depth Secured with six countersunk screws ST4.8 x 19
mit DB	With turn restrictor
Mitgeltende Unterlagen für die Montage beachten!	Comply with the other applicable documents for installation.
ohne DB	Without turn restrictor
ohne Eckumlenkung	Without corner drive
ohne EU	
Position	Position
Position ** für Funktion des Flügelhebers muss gegebenenfalls nachgestellt werden.	The position ** may have to be readjusted to enable the sash lifter to work properly.
RBi	Frame width, internal
RC... Ausführung	Resistance class... version
RHi	Frame height, internal
Schließstücksitze	Striker positions
Standard	Standard
Stulp-Beschlag	Floating-mullion hardware
Stulp DIN L	DIN left floating mullion
Treibstangenmaße	Connecting rod dimensions
Treibstangenstanzung Getriebesperre	Connecting rod punched hole for espagnolette lock

Marking	Translation
Vorbohren Abhängig von Eckverbinder	Predrilling depending on the corner connector
X = frei positionierbar (Vorschlag: ...)	X = freely positionable (suggestion: ...)
zusätzliche Hinweise Drehbegrenzer (DB)	Additional information on the turn restrictor (TR)
1 - Position: Voreinstellung über den Anschlag im Rahmenprofil vornehmen.	1 – position: perform presetting via the stop in the frame profile.
2 - Position: Feineinstellung erfolgt über den Exzenter am Flügel-heber (Hebearmeinstellung)	2 – position: precision adjustment is performed via the eccentric on the sash lifter (lift arm adjustment)

9.4.2 T-O hinge side with CD hinge | 50 kg, 80 kg, 100 kg

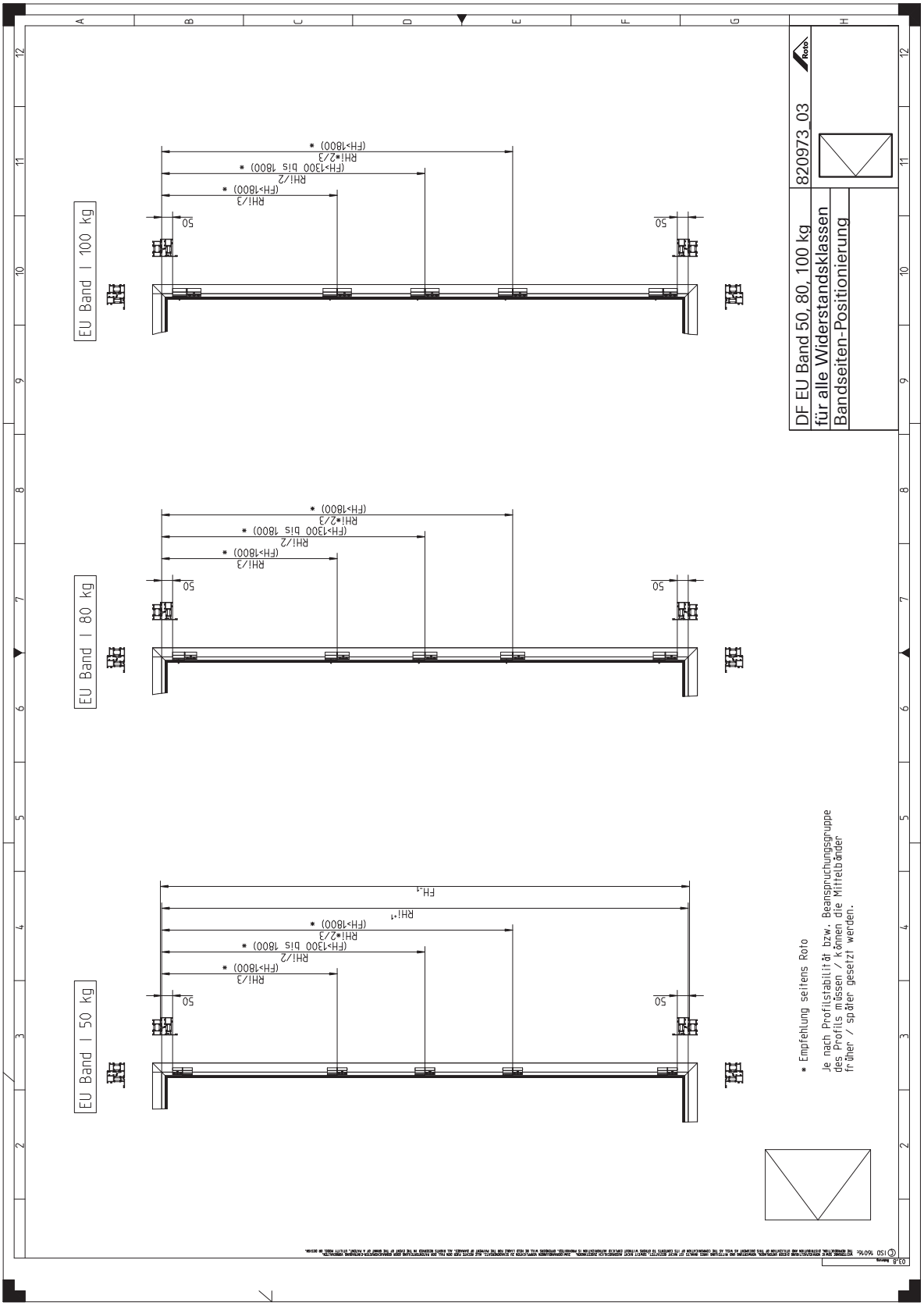

9.4.3 T-O hinge side | 90 - 130 kg

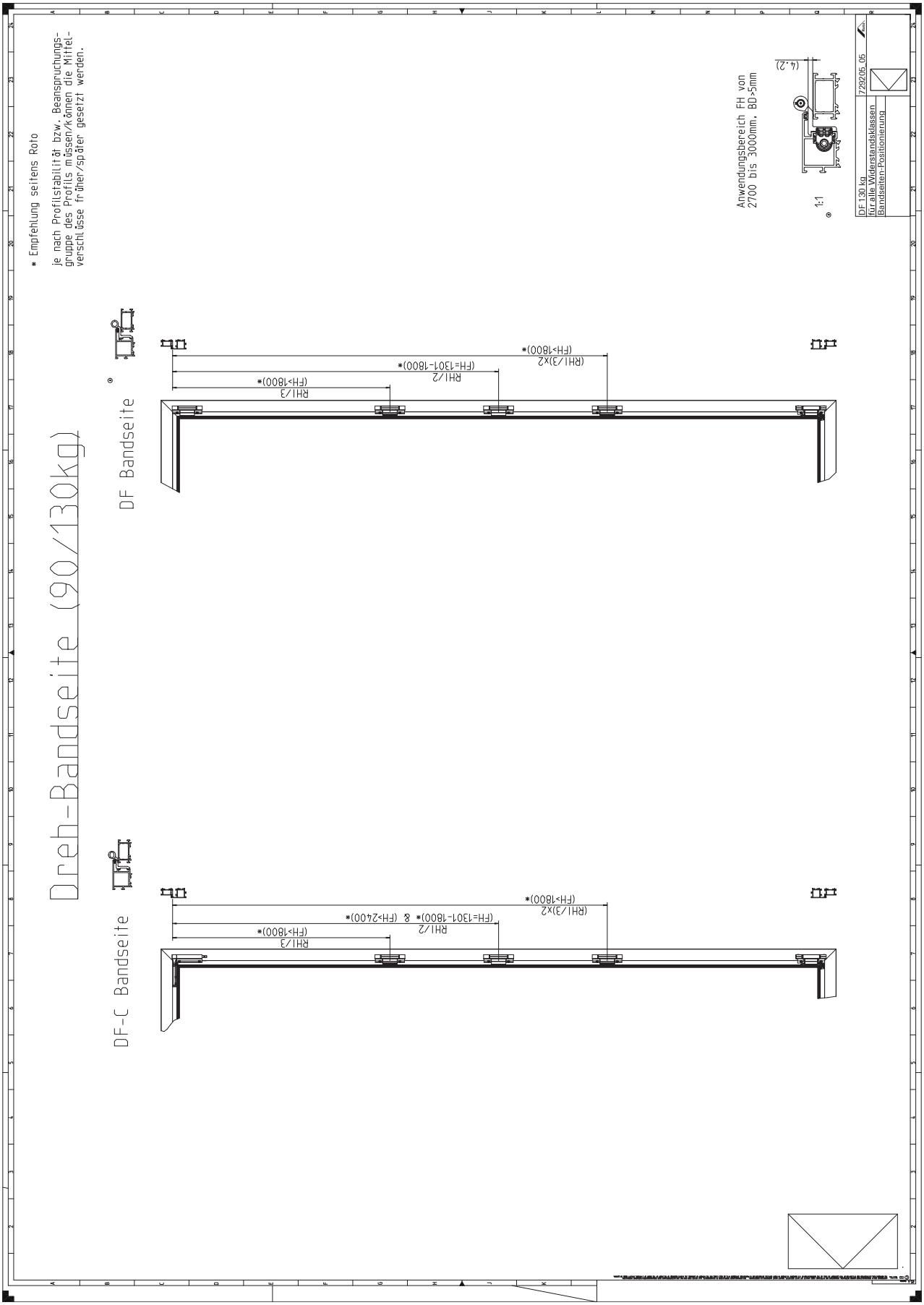

9.4.4 T-O | 90 - 130 kg

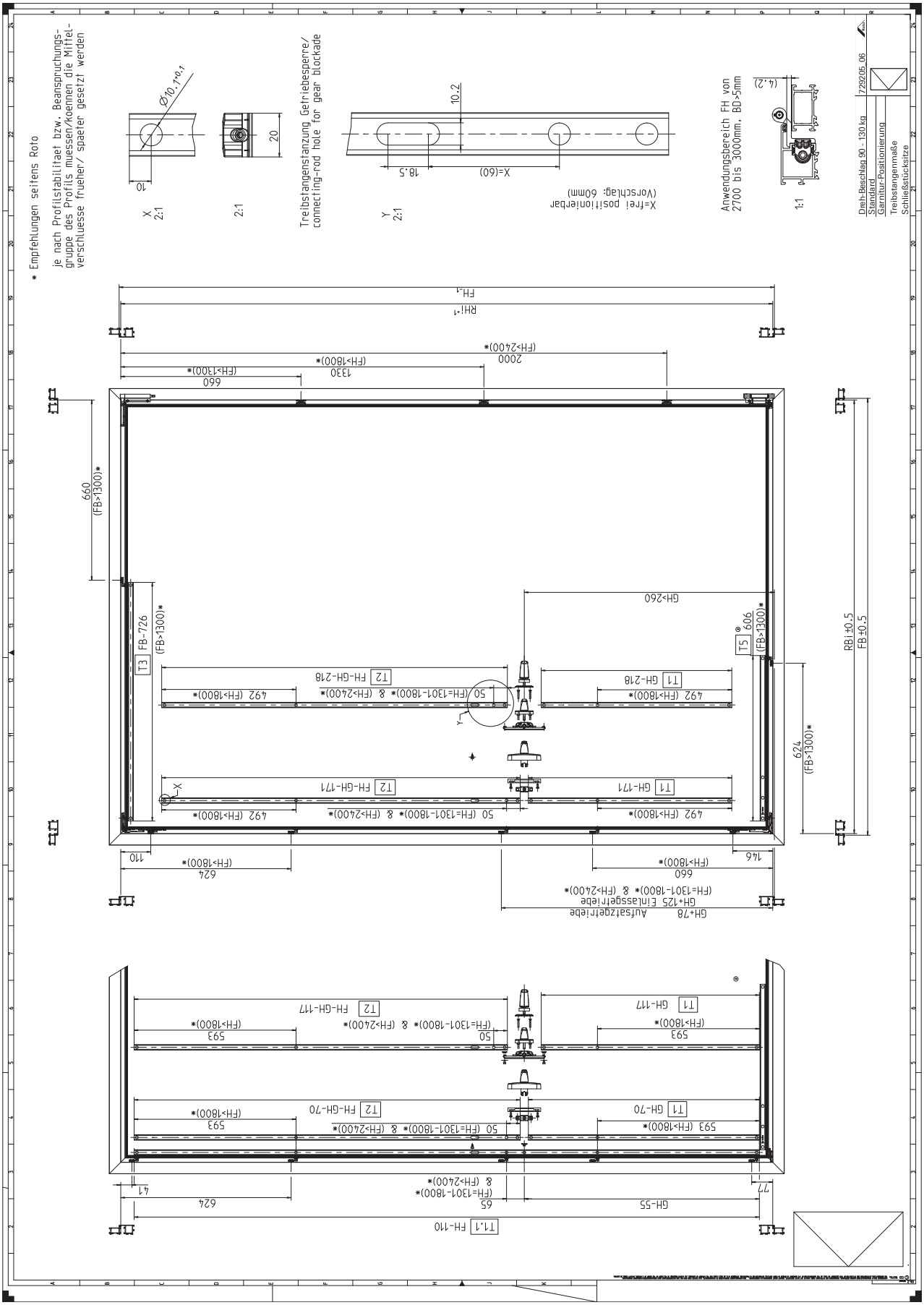

9.4.5 T-O | RC 2 | 90 - 130 kg

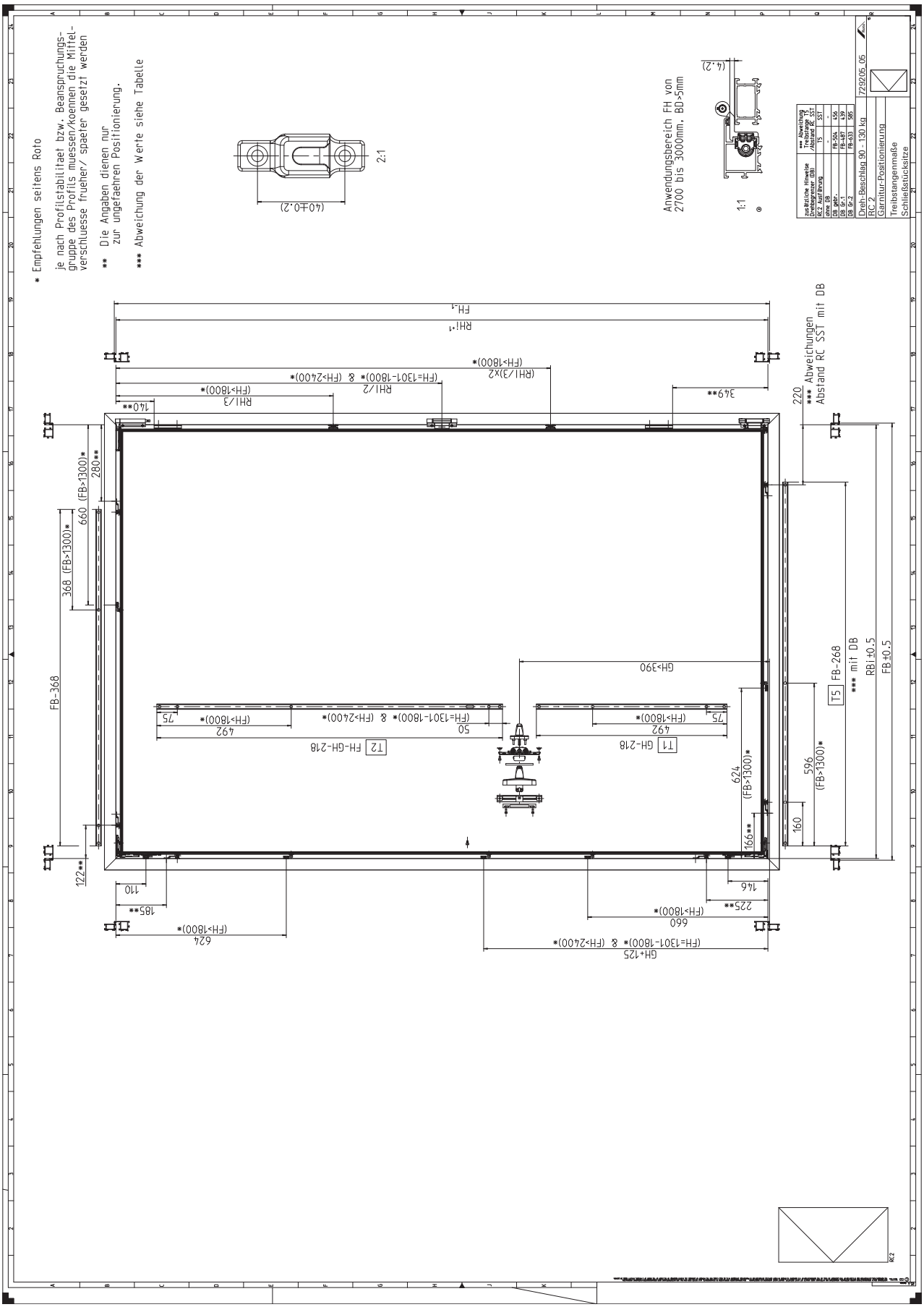

9.4.6 T-O | RC 3 | 90 - 130 kg

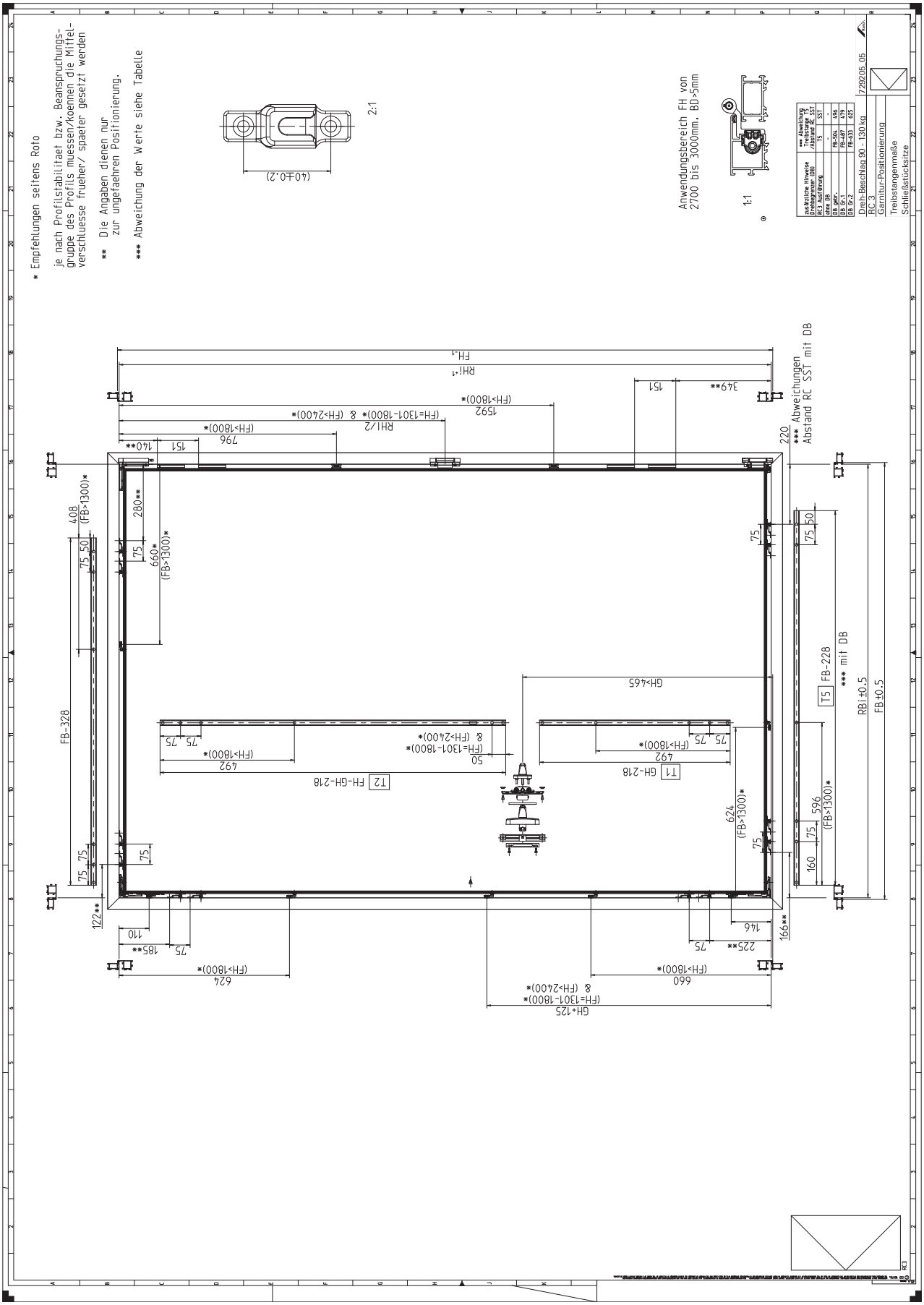

9.4.7 T-O | accessible | 90 - 130 kg

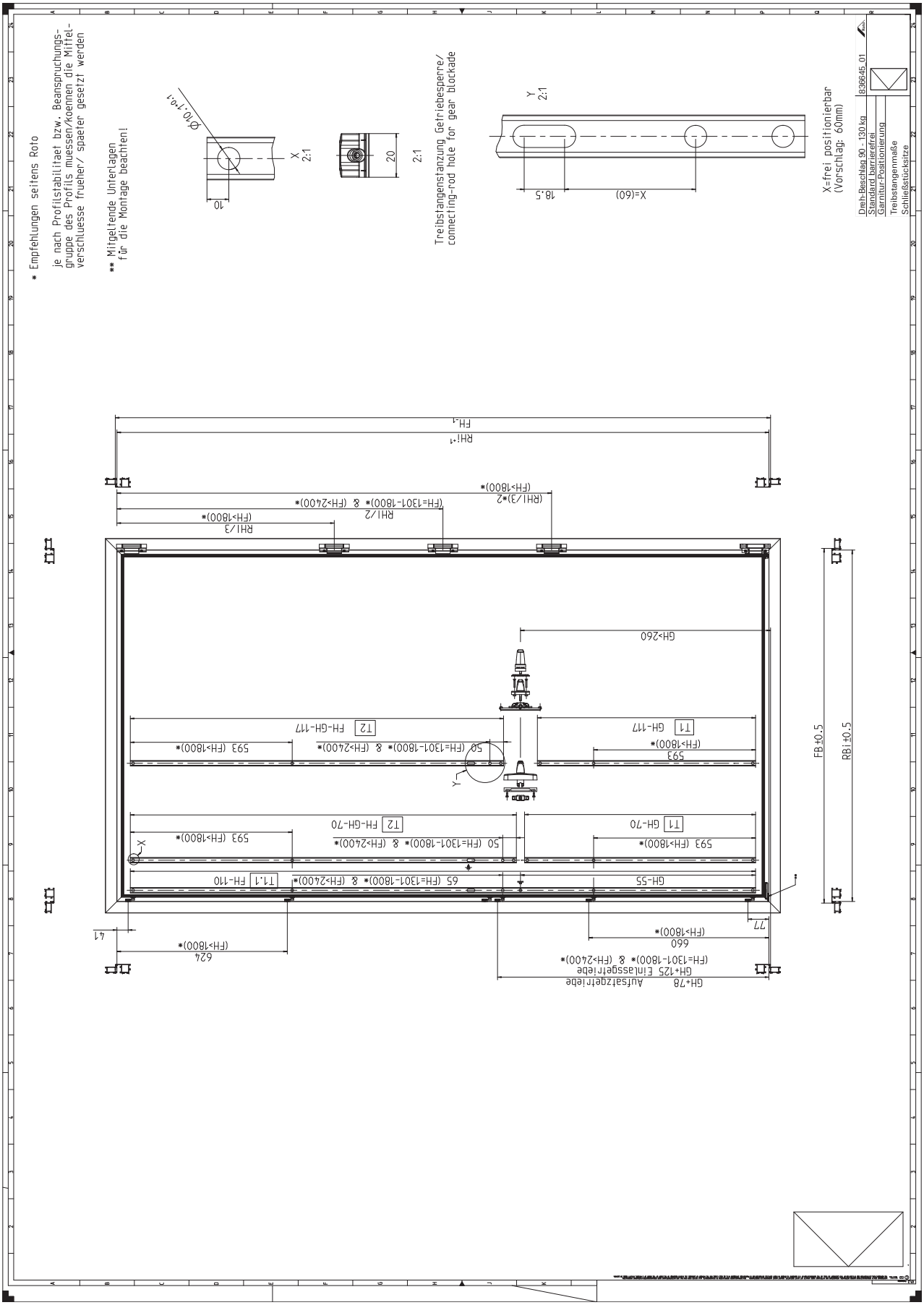

9.4.8 T-O-C hinge side | 160 kg

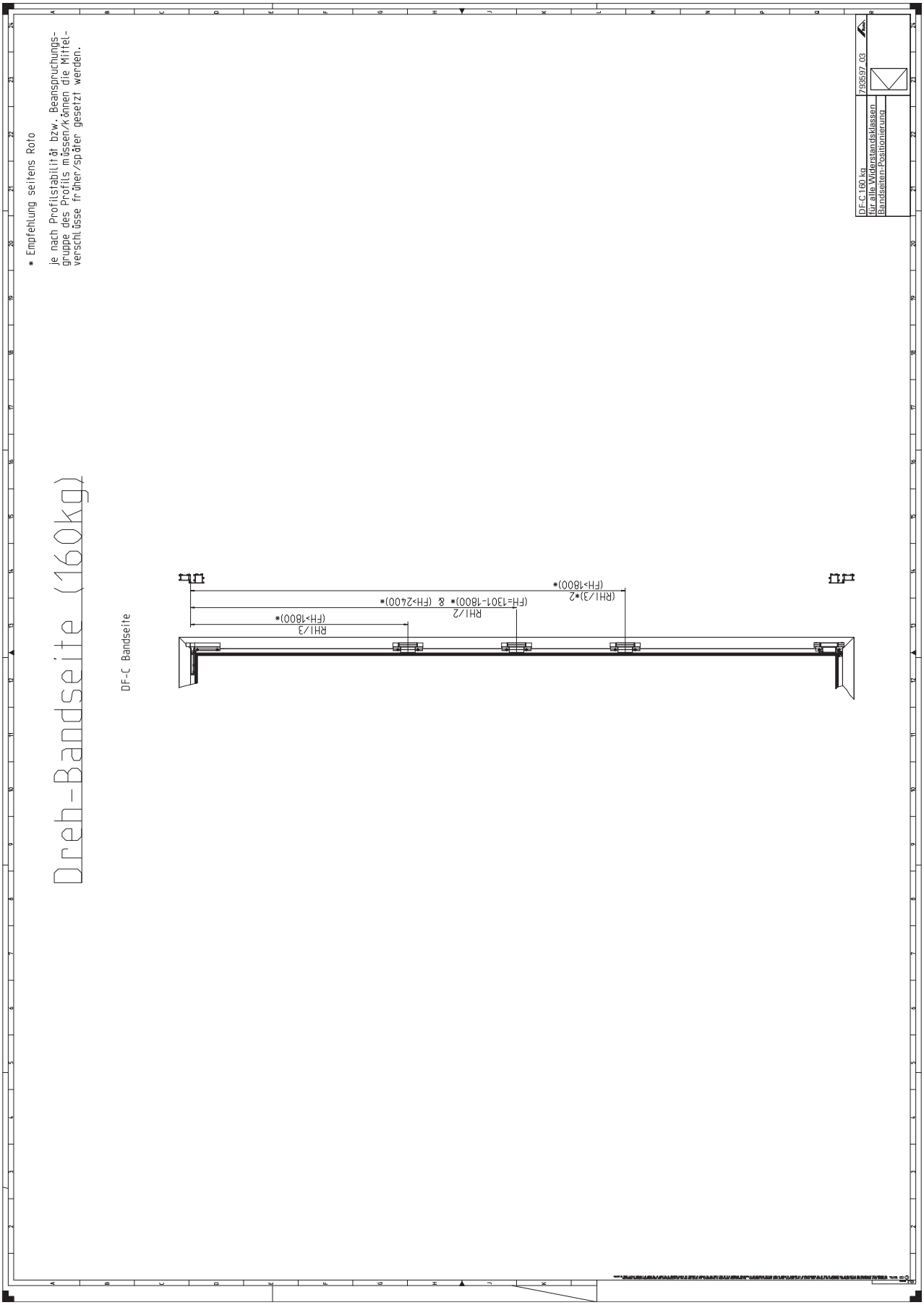

9.4.9 T-O-C | 160 kg

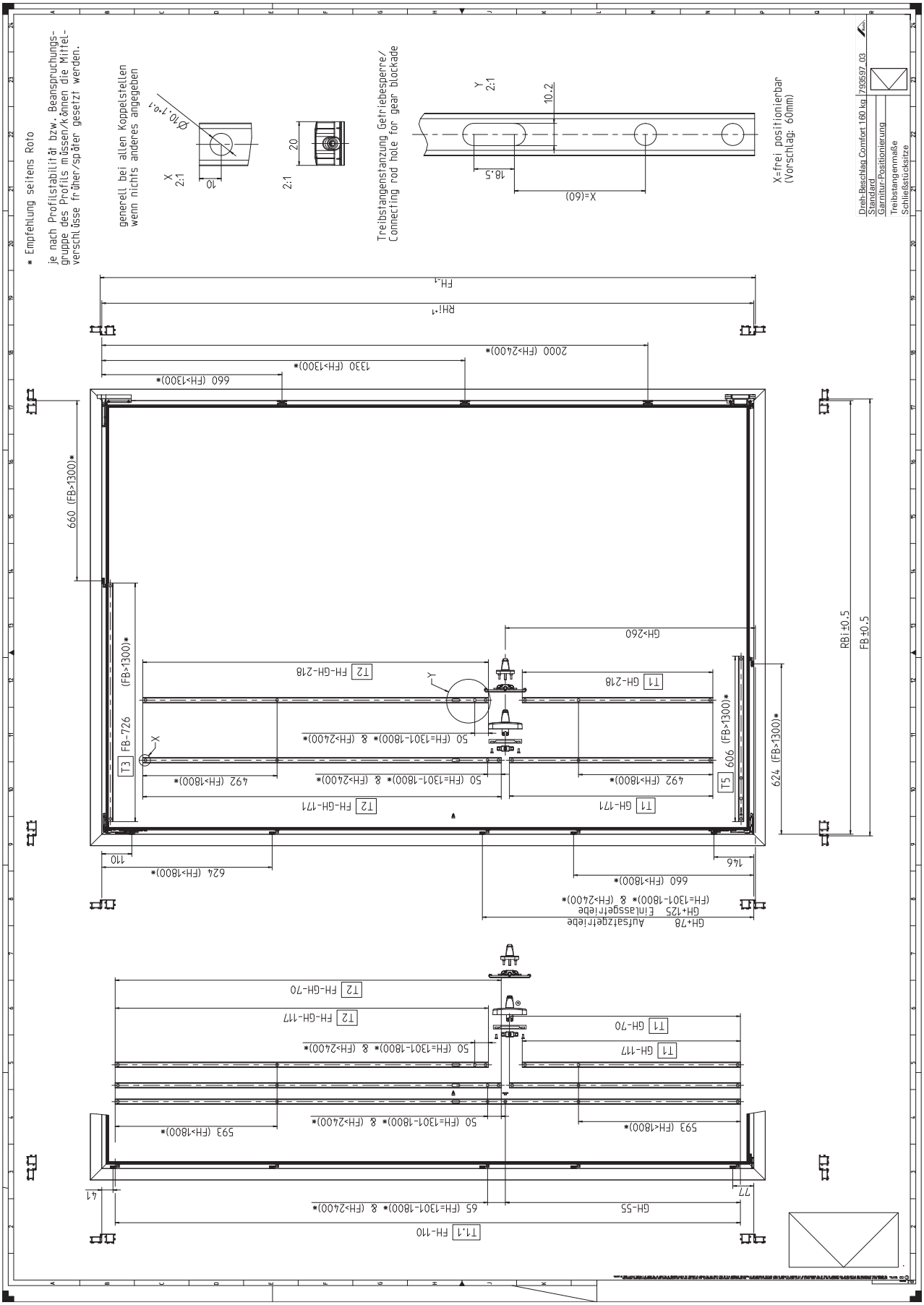

9.4.10 T-O-C | RC 2 | 160 kg

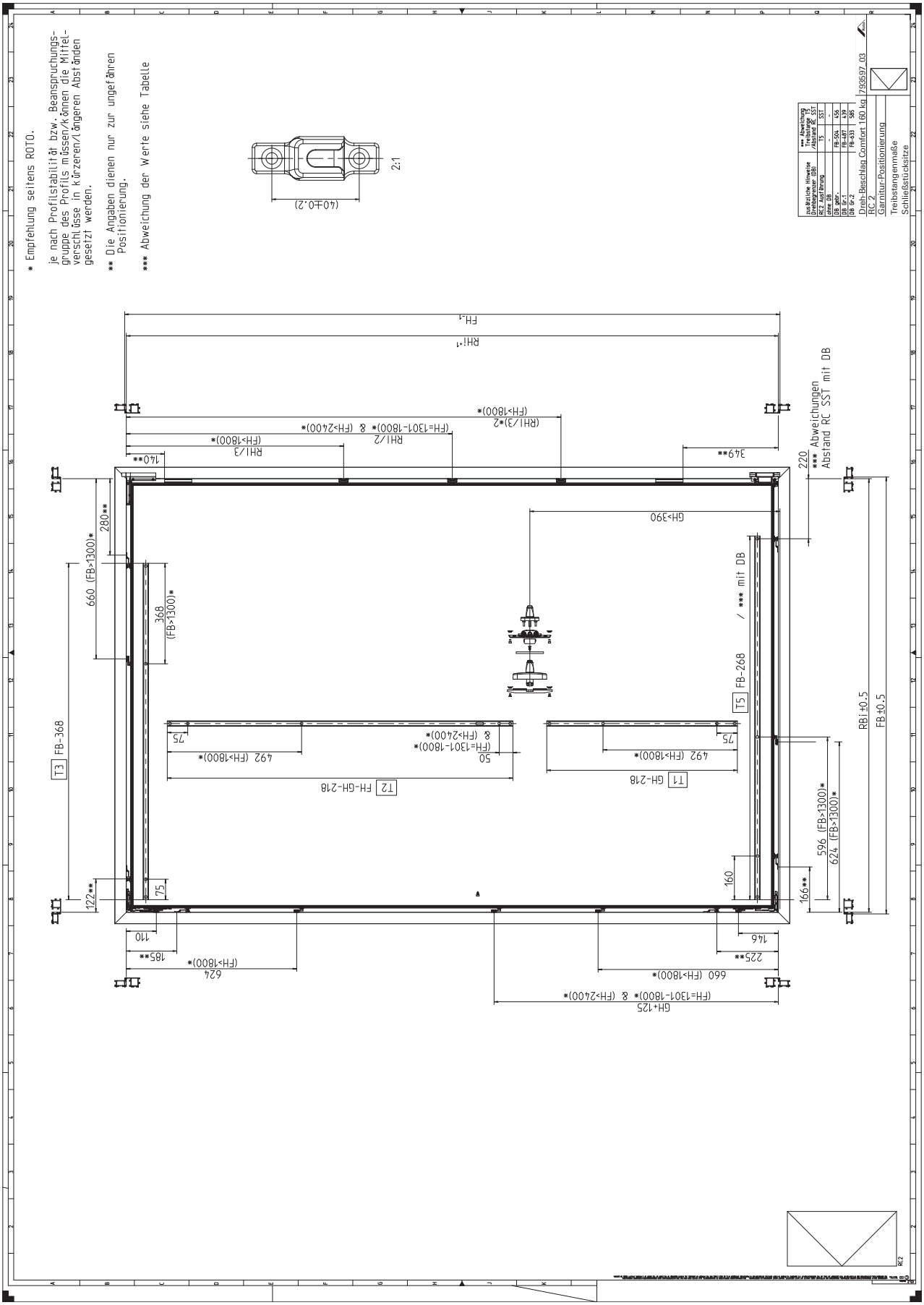

9.4.11 T-O-C | RC 3 | 160 kg

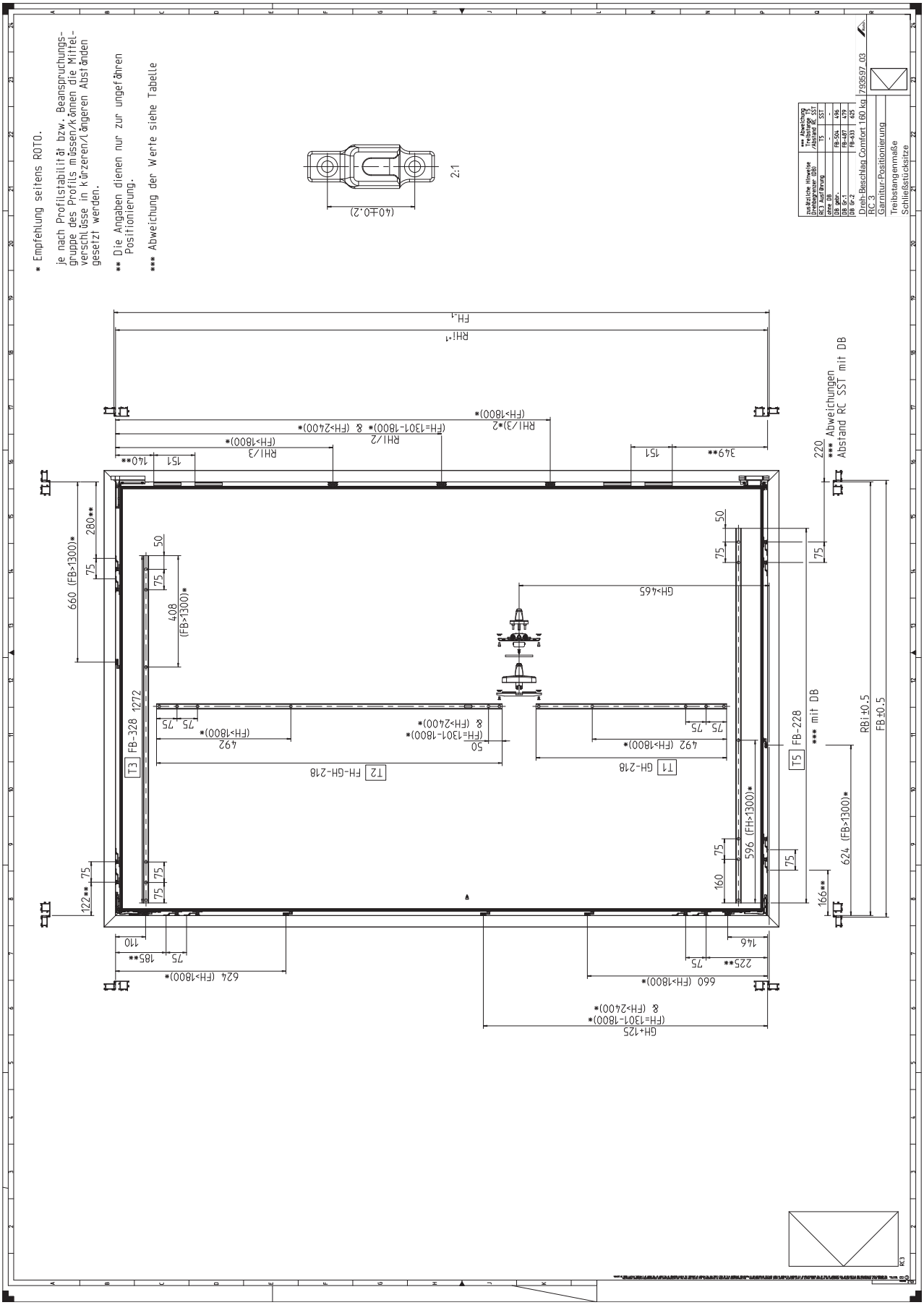

9.4.12 T-O | 200 kg

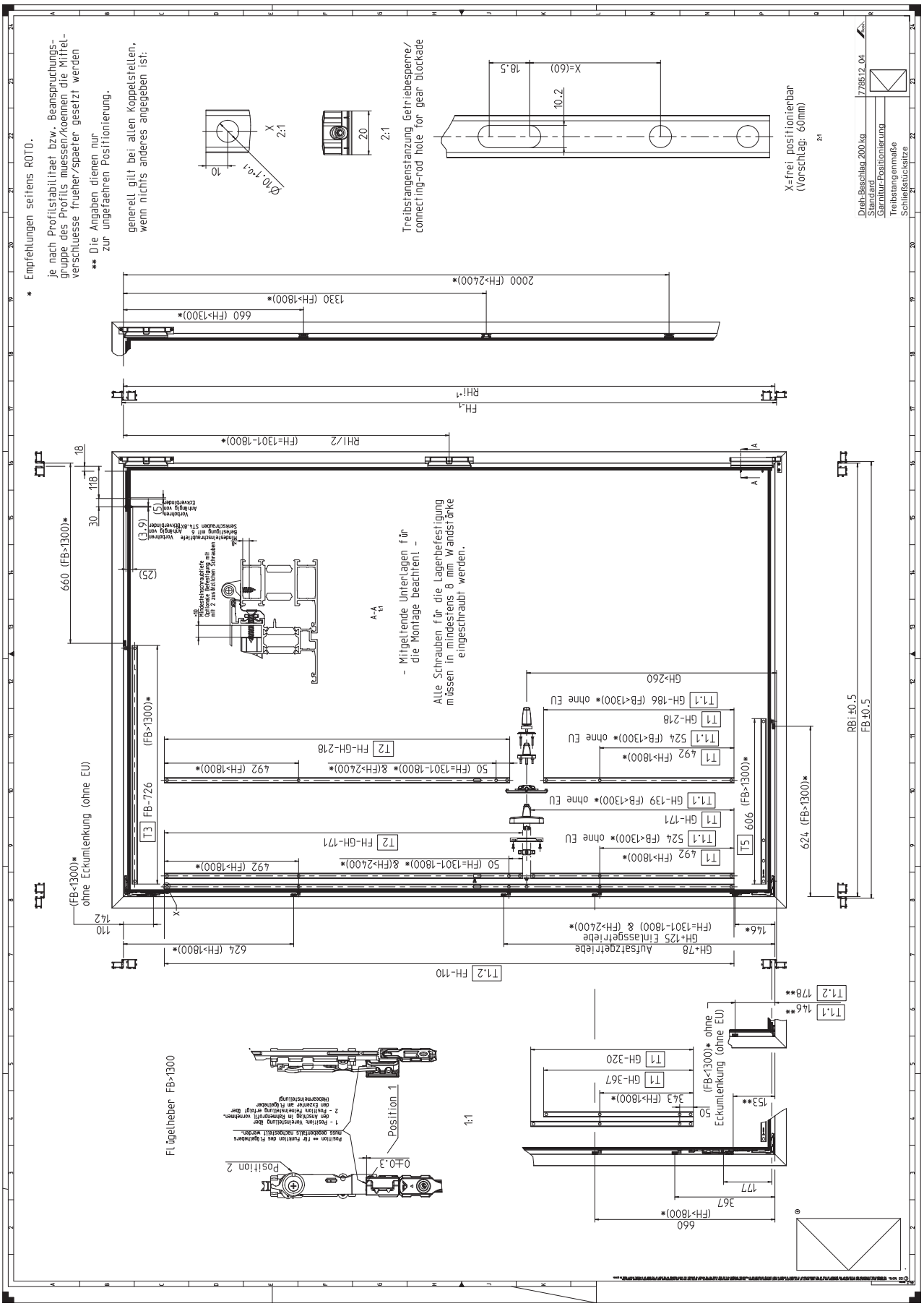

9.4.13 T-O | 300 kg

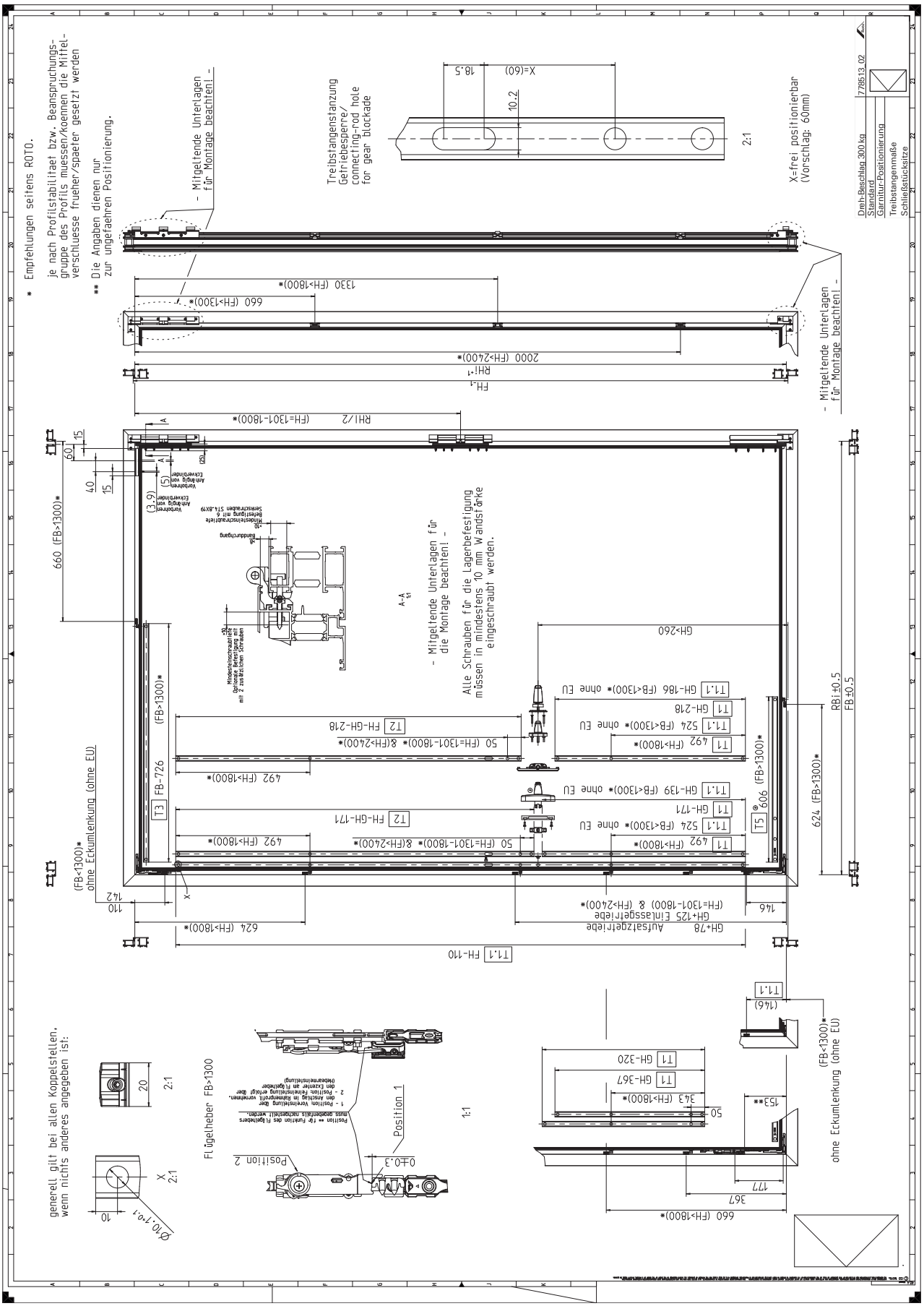

9.5 Tilt-Only hardware

9.5.1 Explanation

The following markings are used in the installation drawings to emphasise references and other elements:

Marking	Translation
Aufsatzgetriebe / Aufsatzgetr.	Geared-handle
Banddurchgang	Hinge passage
Bandseiten	Hinge sides
Bandseiten-Positionierung	Hinge side positioning
Bohrung im Vollmaterial	Drill hole in solid material
Die Angaben dienen nur zur ungefaehren Positionierung.	The information is for approximate positioning only.
Dreh-Bandseite	Turn-Only hinge side
Eindrehen mit gefettetem Schraubengewinde	Screw in with greased screw thread
Einlassgetriebe / Einlassgetr.	Flush-encased gearbox
Empfehlungen seitens Roto : je nach Profilstabilitaet bzw. Beanspruchungsgruppe des Profils muessen / koennen die Mittel-verschluesse frueher / spaeter gesetzt werden.	Recommendations from Roto: depending on the profile stability or profile loading group, the centre locks must / can be put in place at an earlier / later point.
EU Band	CD hinge
FB	Sash width
FH	Sash height
für alle Widerstandsklassen	For all resistance classes
Garnitur-Positionierung	Set positioning
generell bei allen Koppelstellen, wenn nichts anderes angegeben	Generally for all coupling points, unless otherwise specified
Getriebe	Espagnolette
GH	Handle height
Griff oben	Handle at the top
Griff seitlich	Handle at the side
KF Bandseiten-Set & KF Mittelband-Set	Tilt-Only hinge side set and Tilt-Only central hinge set
KFo mit EU Band	Tilt-Only with CD hinge
Kipp-Beschlag	Tilt-Only hardware
Kippweite ... bis ...	Tilt distance ... to ...
Kippweite liegt zwischen... und ...	The tilt distance is between ... and ...
min.	Minimum
min. Einschraubtiefe	Minimum screw-in depth
Position der Kippscheren	Position of the Tilt-Only stay arms
Position der Kippscheren, Schließstücke und Länge der Treib-stangen/-stanzungen	Position of the Tilt-Only stay arms, strikers and length of the connecting rods / punched holes
RBi	Frame width, internal
RHi	Frame height, internal
Scheren-Positionierung	Scissor stay positioning
Schließstücksitze	Striker positions
SST	Striker
Treibstangenmaße	Connecting rod dimensions
Treibstangenstanzung Getriebesperre	Connecting rod punched hole for espagnolette lock
X = frei positionierbar (Vorschlag: ...)	X = freely positionable (suggestion: ...)
Mitgeltende Unterlagen für die Montage beachten!	Comply with the other applicable documents for installation.

9.5.2 TiSt with CD hinge | 50 kg

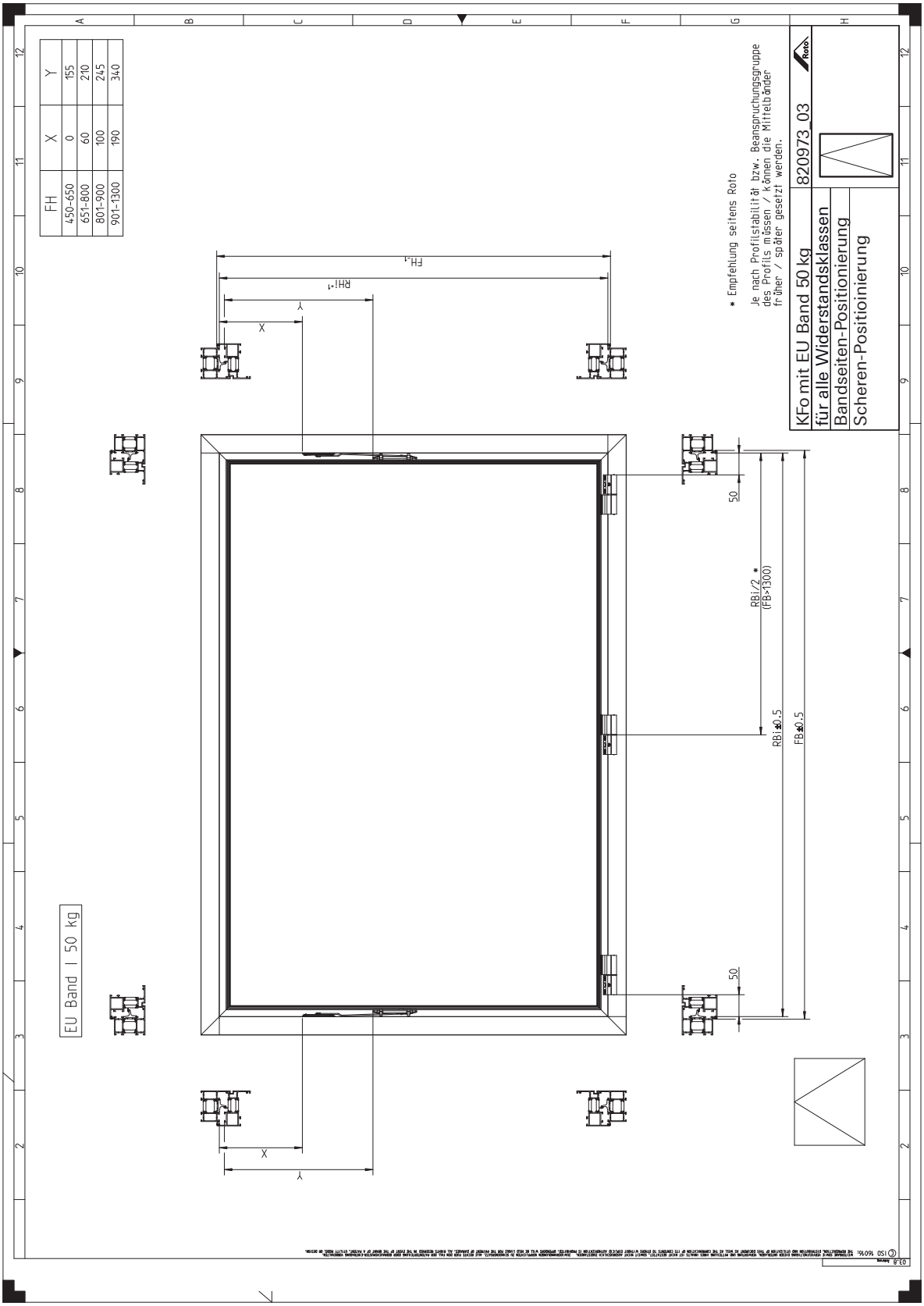

9.5.3 TiS hinge side | 130 kg

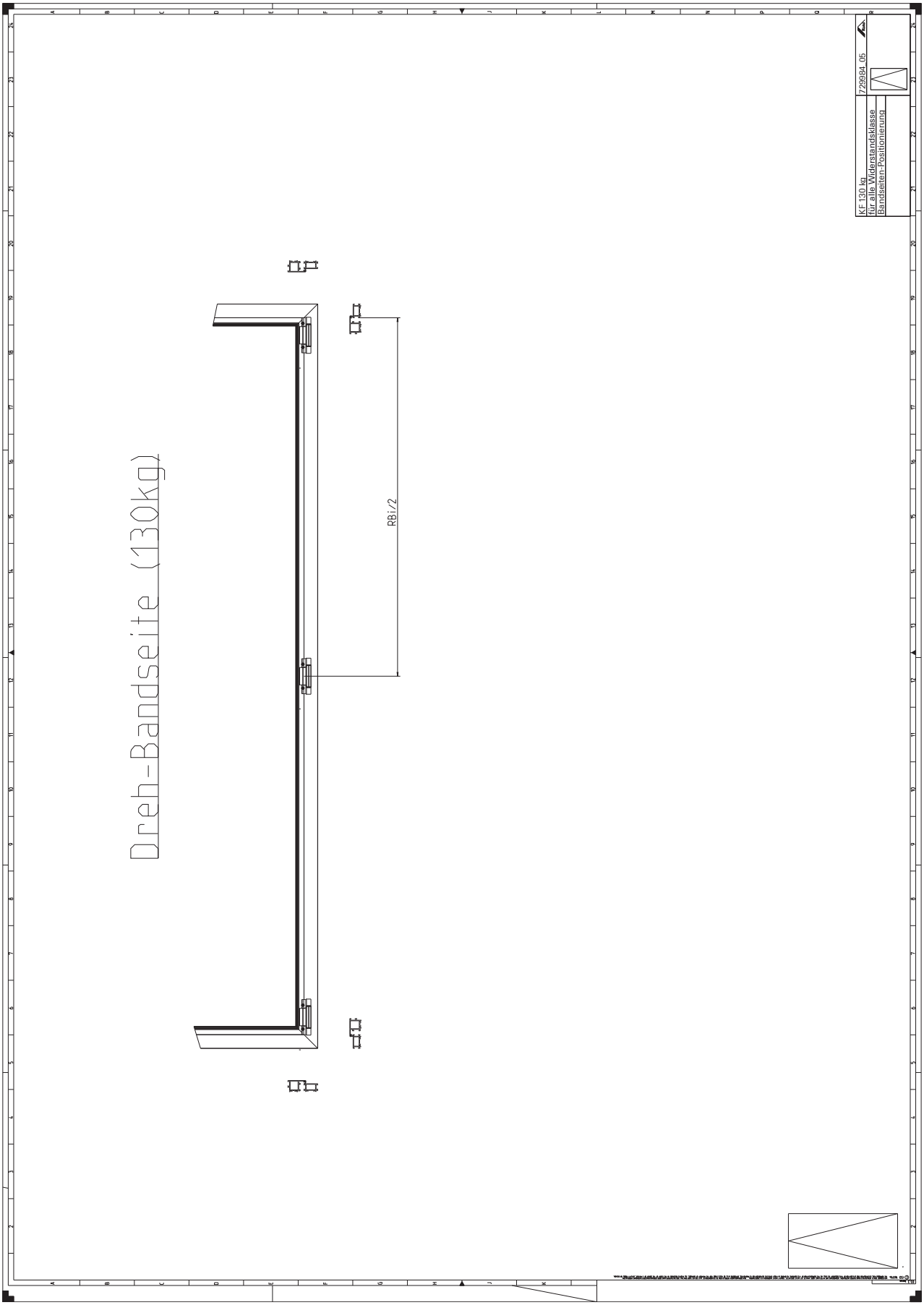

9.5.4 TiS hinge side | 200 kg

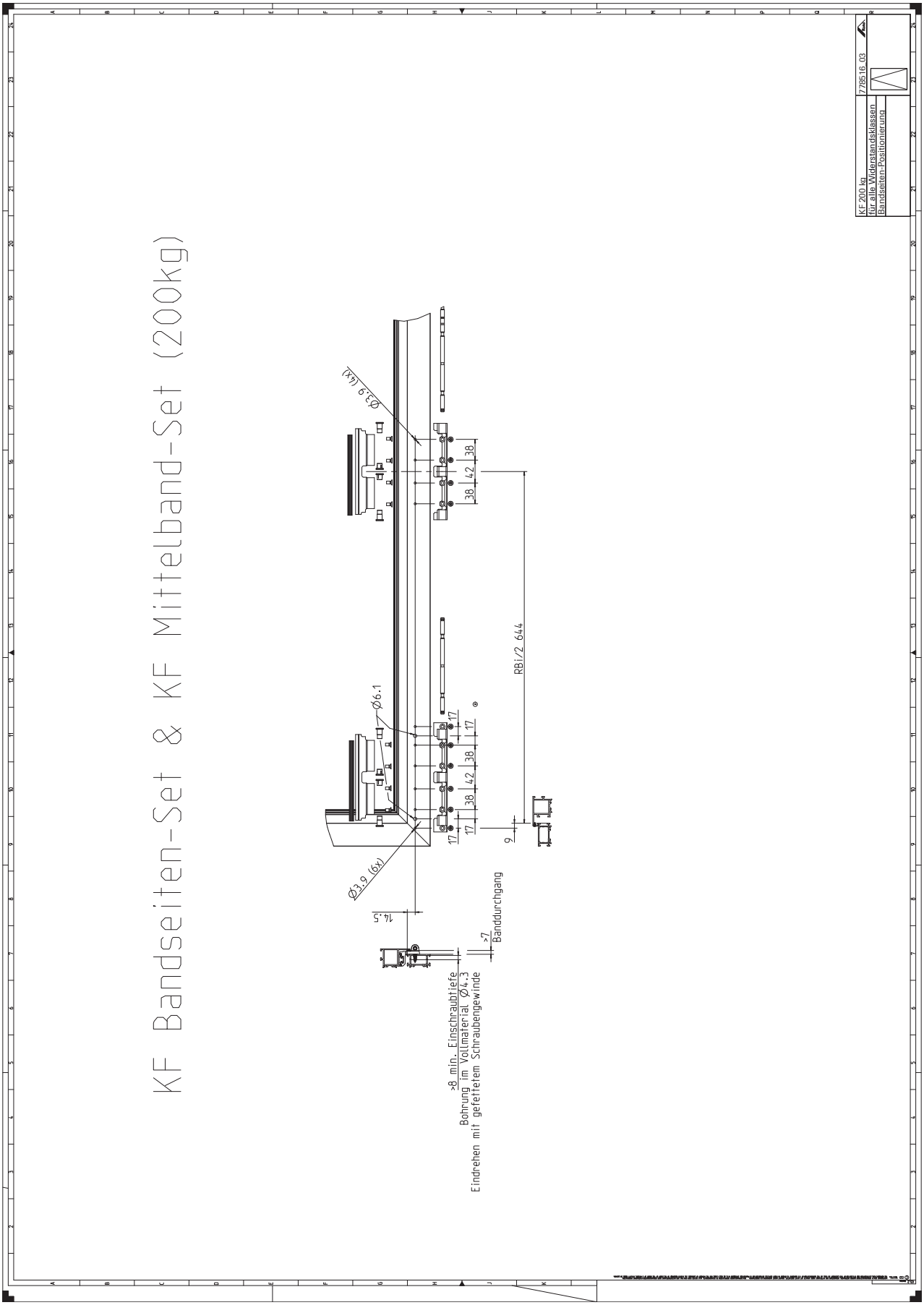

9.5.5 TiSt | 130 kg

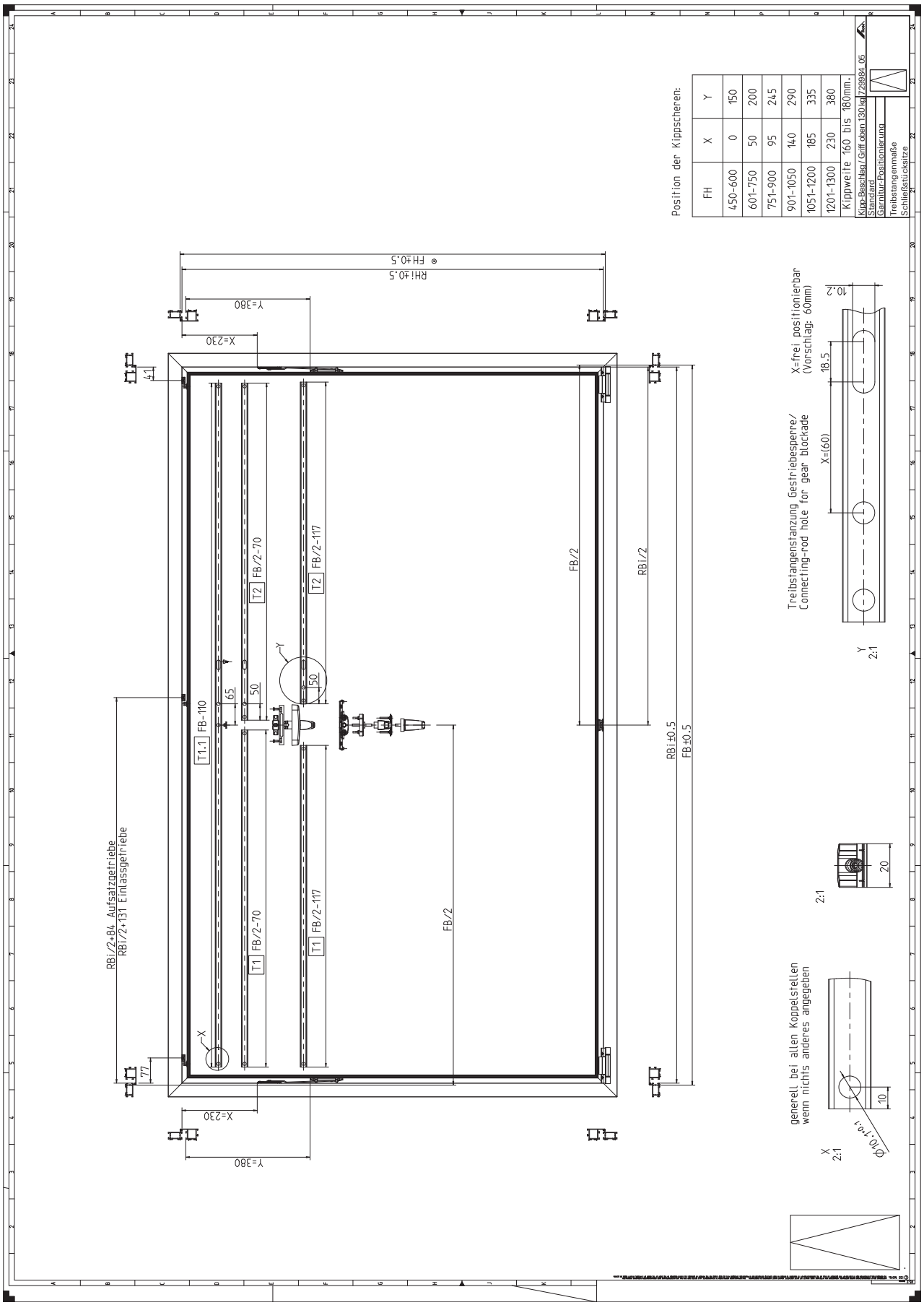

9.5.6 TiSt | RC 2 | 130 kg

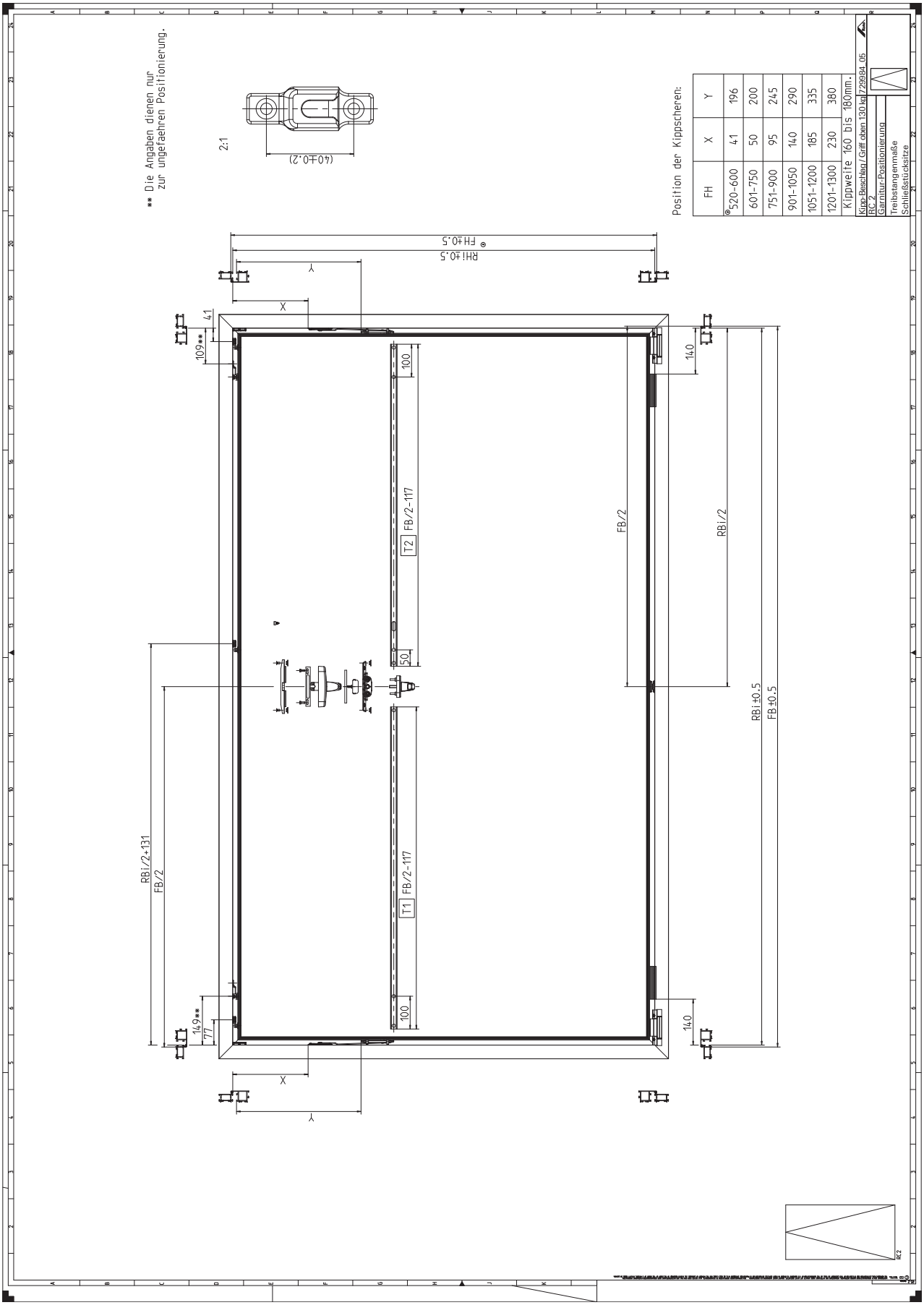

9.5.7 TiSt | RC 3 | 130 kg

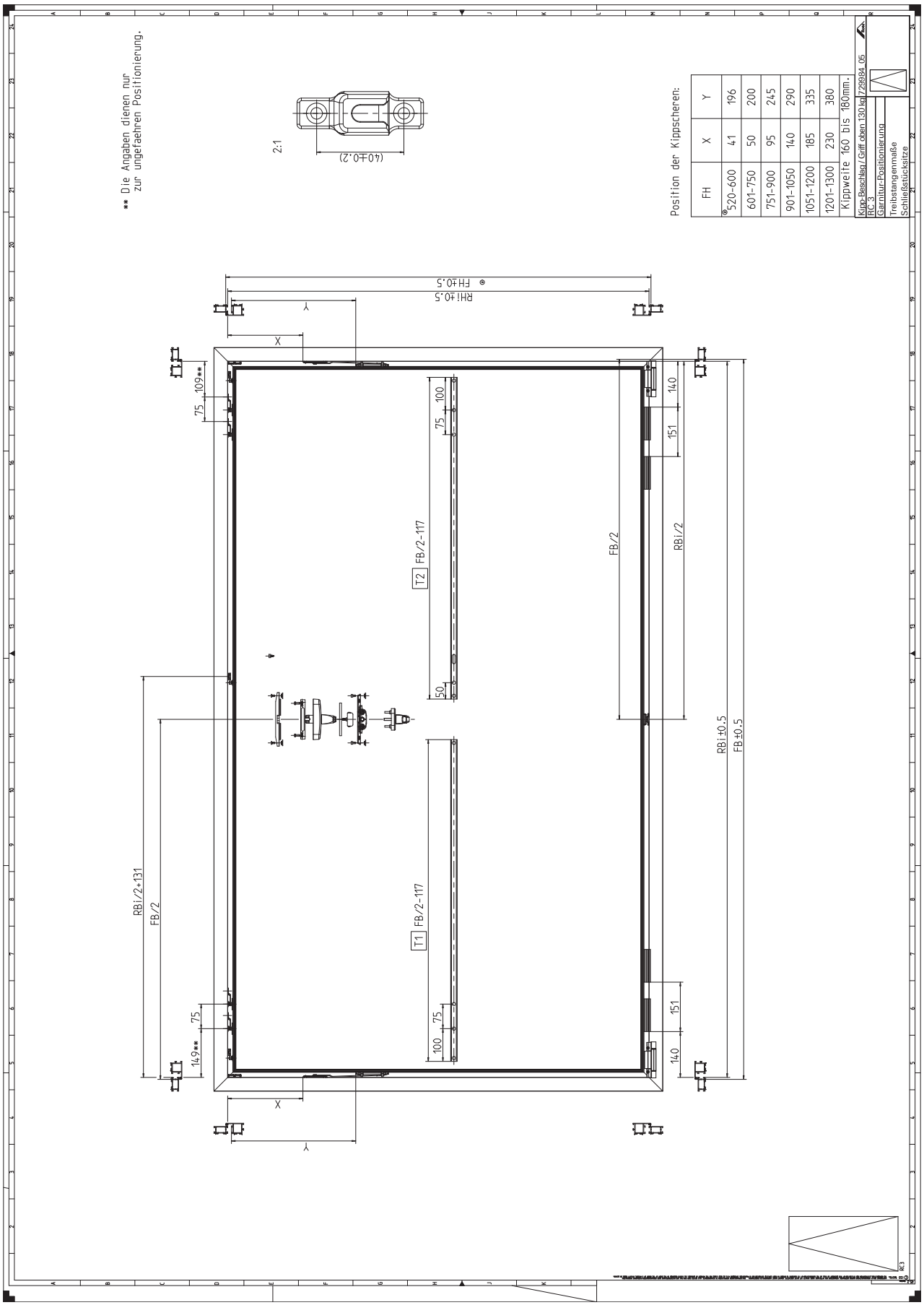

9.5.8 TiSt | 200 kg

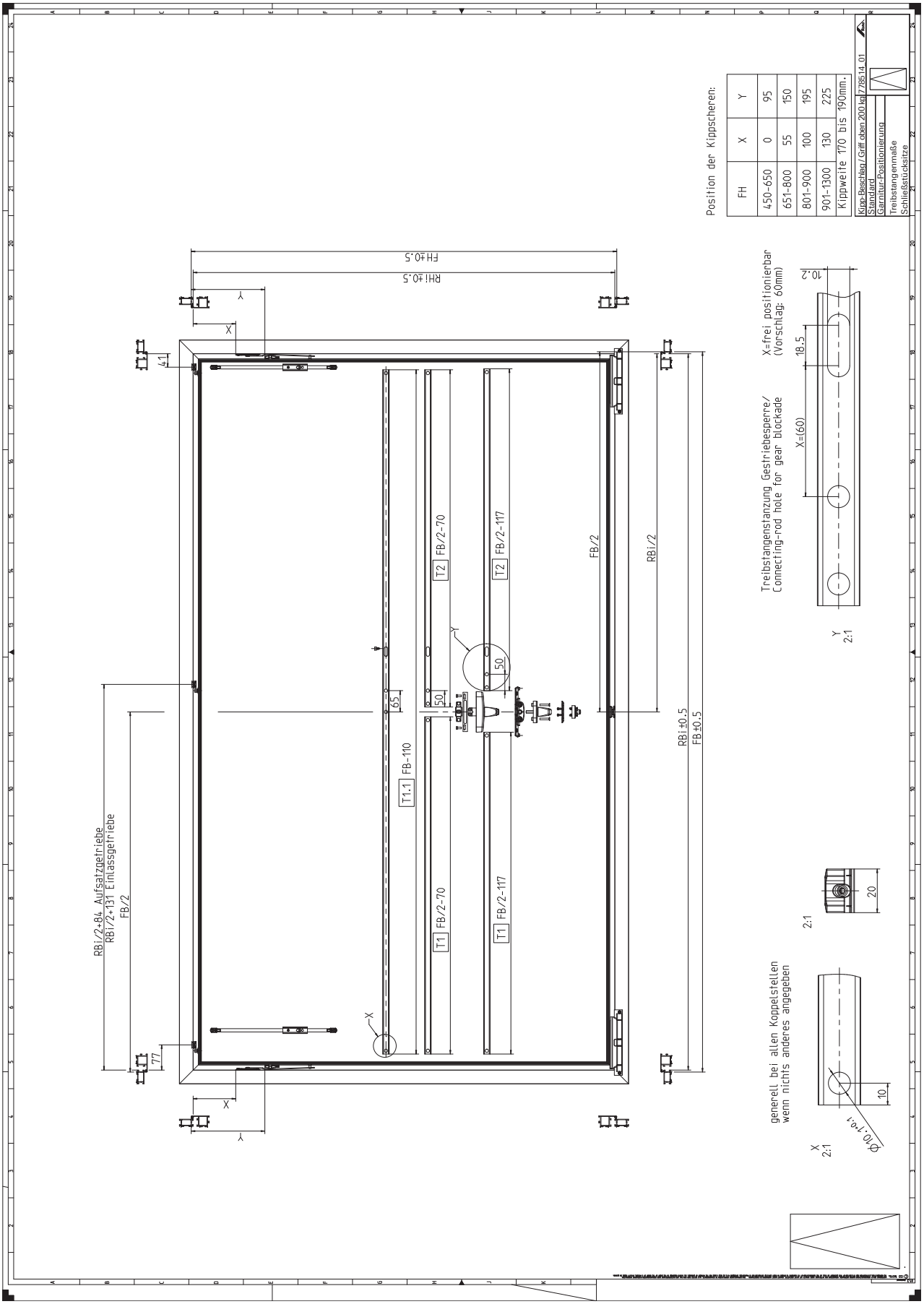

9.5.9 TiSt night vent

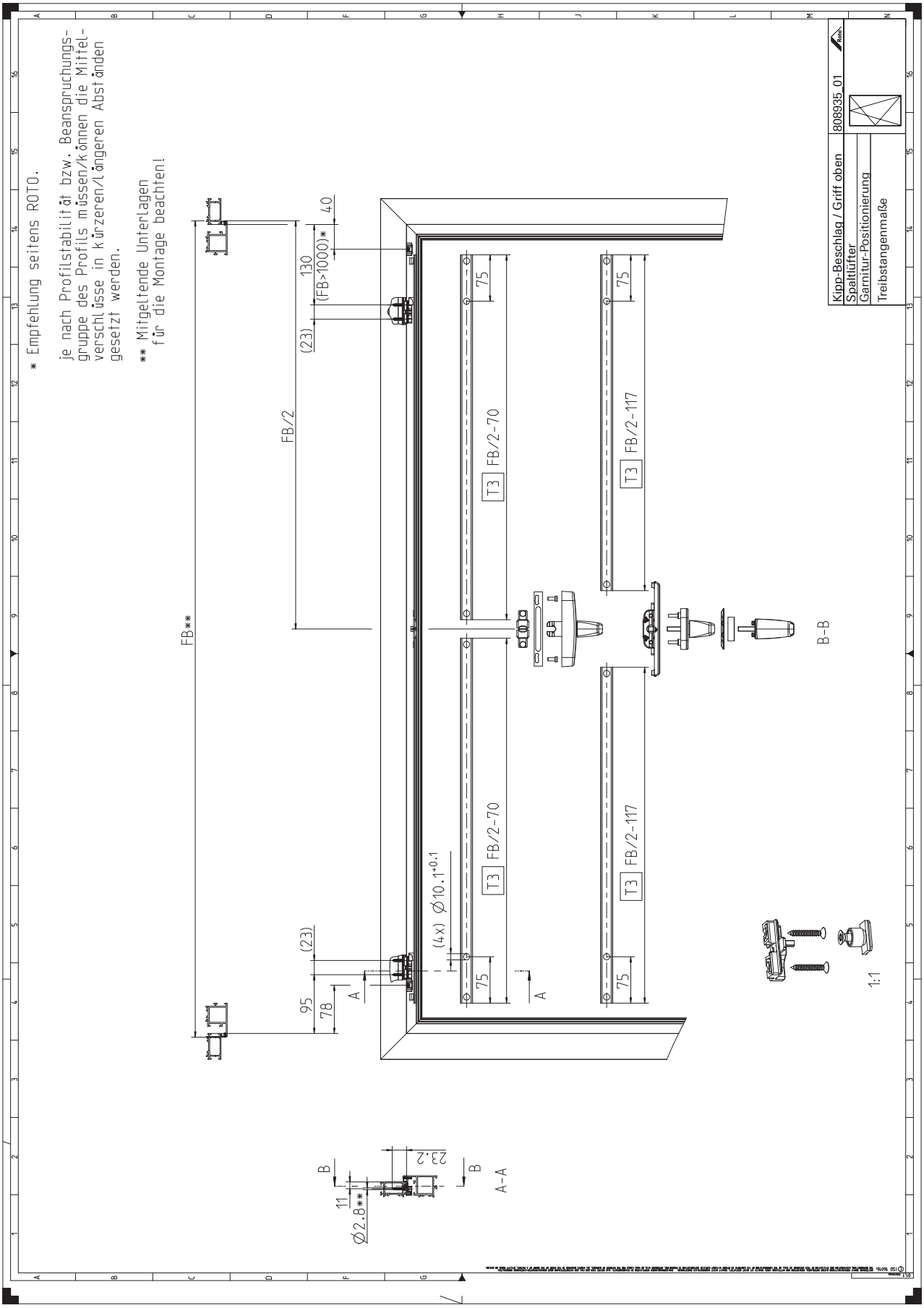

9.5.10 TiSs | 130 kg

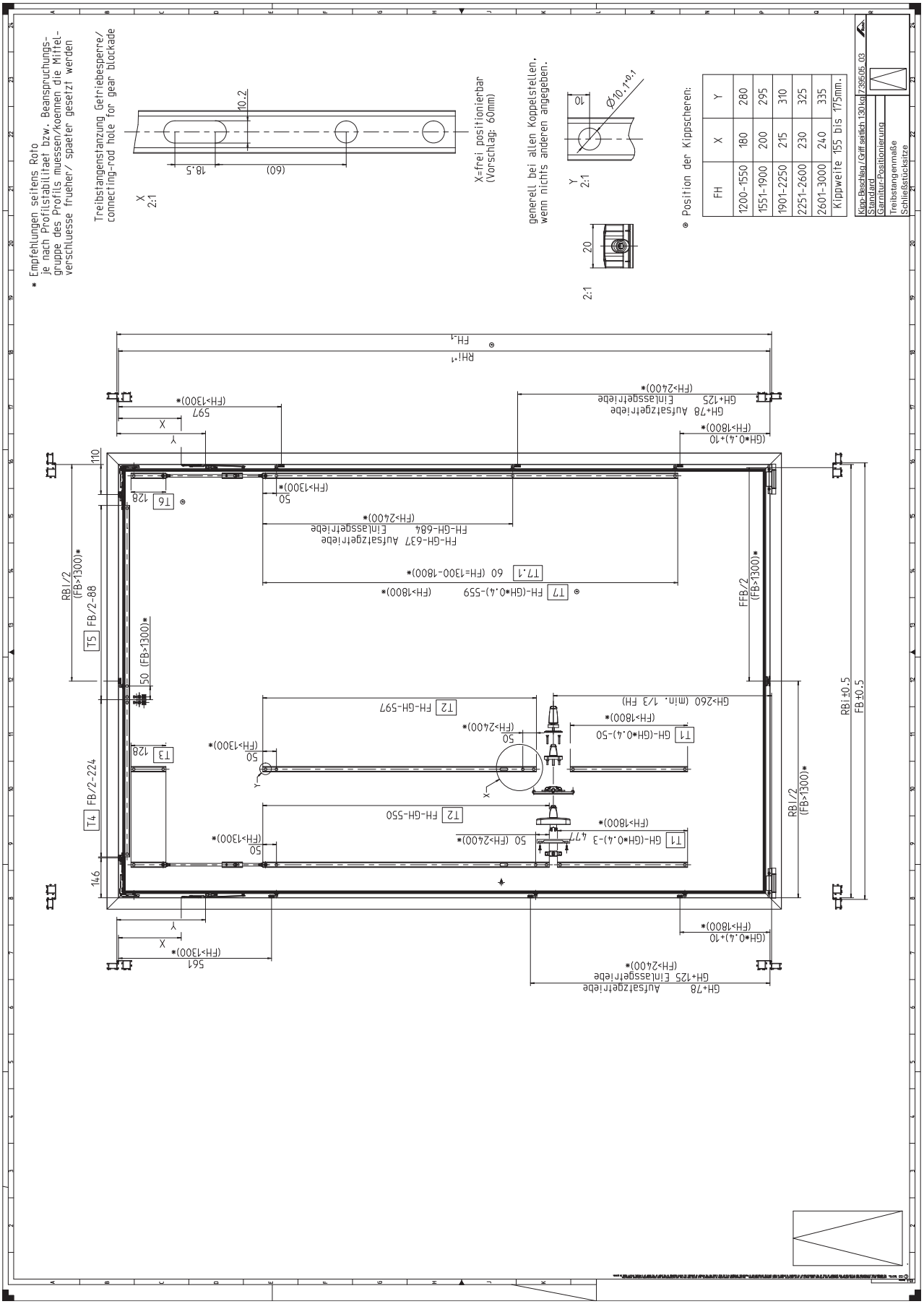

9.5.11 TiSs | RC 2 | 130 kg

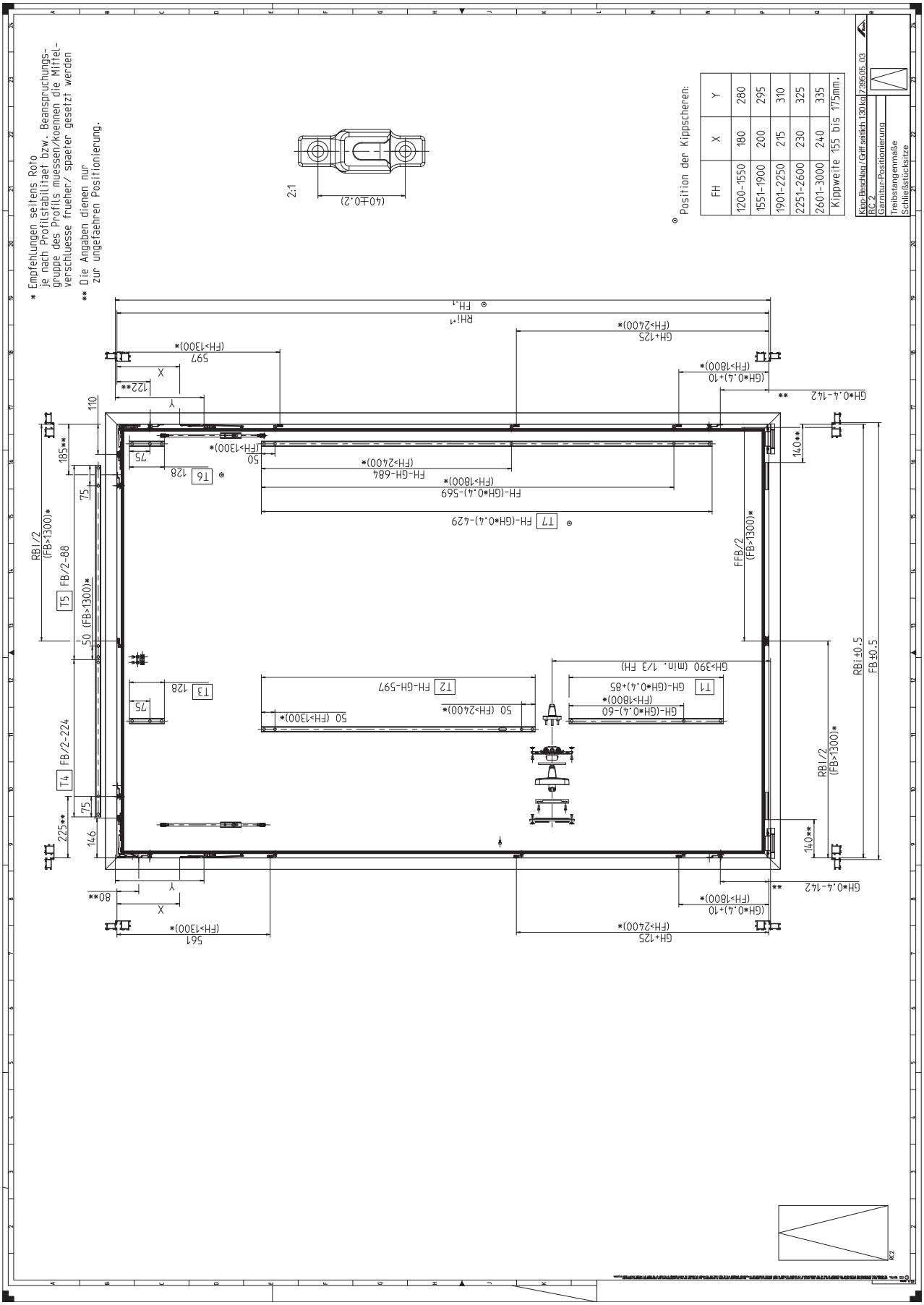

9.5.12 TiSs | RC 3 | 130 kg

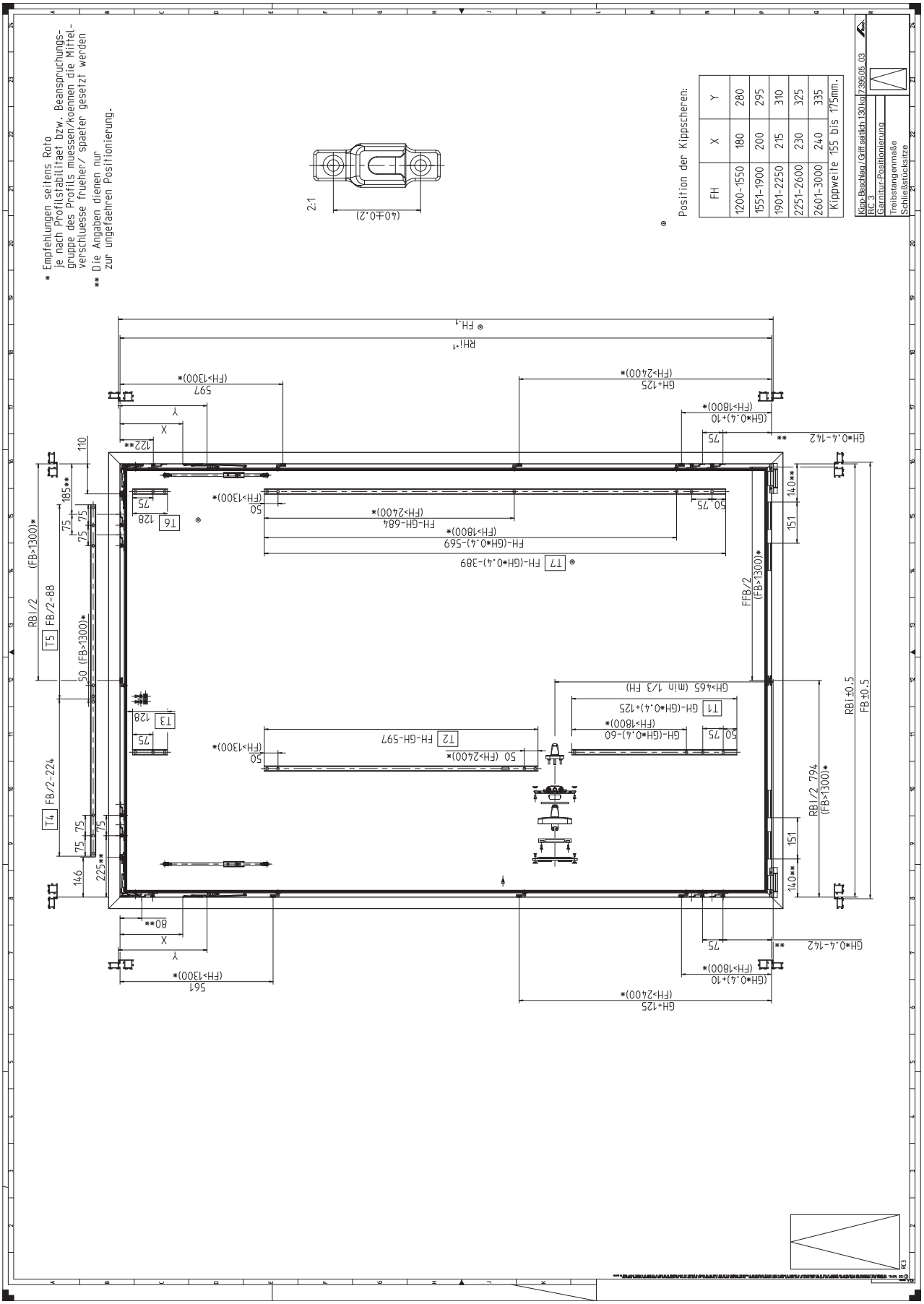

9.5.13 TiSs | 200 kg

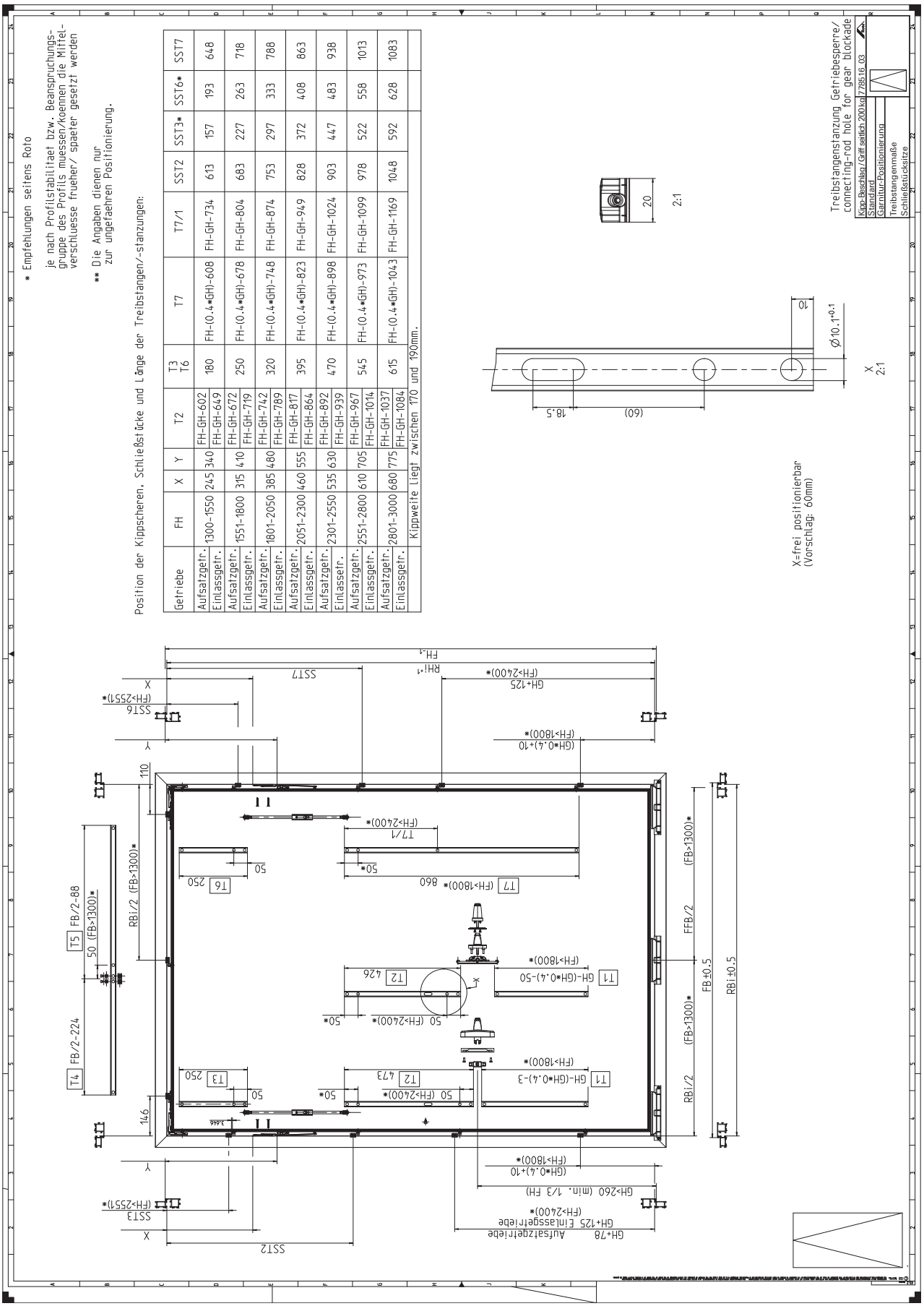

Getriebe	FH	X	Y	T2	T3 T6	T7	T7/1	SST2	SST3*	SST6*	SST7
Aufsatzgetr.	1300-1550	245	340	FH-GH-602	180	FH-(0.4*GH)-608	FH-GH-734	613	157	193	648
Einlassgetr.				FH-GH-649							
Aufsatzgetr.	1551-1800	315	410	FH-GH-672	250	FH-(0.4*GH)-678	FH-GH-804	683	227	263	718
Einlassgetr.				FH-GH-719							
Aufsatzgetr.	1801-2050	385	480	FH-GH-742	320	FH-(0.4*GH)-748	FH-GH-874	753	297	333	788
Einlassgetr.				FH-GH-789							
Aufsatzgetr.	2051-2300	460	555	FH-GH-817	395	FH-(0.4*GH)-823	FH-GH-949	828	372	408	863
Einlassgetr.				FH-GH-864							
Aufsatzgetr.	2301-2550	535	630	FH-GH-892	470	FH-(0.4*GH)-898	FH-GH-1024	903	447	483	938
Einlassetr.				FH-GH-939							
Aufsatzgetr.	2551-2800	610	705	FH-GH-967	545	FH-(0.4*GH)-973	FH-GH-1099	978	522	558	1013
Einlassgetr.				FH-GH-1014							
Aufsatzgetr.	2801-3000	680	775	FH-GH-1037	615	FH-(0.4*GH)-1043	FH-GH-1169	1048	592	628	1083
Einlassgetr.				FH-GH-1084							

9.6 Floating-mullion hardware

9.6.1 Explanation

The following markings are used in the installation drawings to emphasise references and other elements:

Marking	Translation
Abweichungen Abstand RC SST mit DB	Deviations from distance RC striker with turn restrictor
Abweichung bei DB Gr.2 und FB2 > 1300: Soll=15	Deviation with TR size 2 and SW2 > 1300: target=15
Abweichung der Werte siehe Tabelle	Refer to the table for deviations in the values
Aktiv Abweichung Treibstange T5 / Abstand RC SST	Active deviation from connecting rod CR5 / distance RC striker
Aufsatzgetriebe	Geared-handle
DB gebr.	Braked turn restrictor
DB Gr. 1	Damped / braked turn restrictor size 1
DB Gr. 2	Damped / braked turn restrictor size 2
Die Angaben dienen nur zur ungefaehren Positionierung.	The information is for approximate positioning only.
Dreh (Zweitöffnender Flügel)	Turn-Only (second opening sash)
Dreh-Kipp (Erstöffnender Flügel)	Tilt&Turn (first opening sash)
Einlassgetriebe	Flush-encased gearbox
Empfehlungen seitens Roto : je nach Profilstabilitaet bzw. Beanspruchungsgruppe des Profils muessen / koennen die Mittel-verschluesse frueher / spaeter gesetzt werden.	Recommendations from Roto: depending on the profile stability or profile loading group, the centre locks must / can be put in place at an earlier / later point.
Ergänzende Unterlagen: Einbauzeichnungen ST	Additional documents: floating mullion installation drawings
FB	Sash width
FH	Sash height
Garnitur-Positionierung	Set positioning
generell bei Stulp Koppelstellen, wenn nichts anderes angegeben	Generally for floating mullion coupling points, unless otherwise specified
Gezeichnet in Drehstellung	Drawn in the turn position
GH	Handle height
Hinweis: Position und Orientierung der Schliessstücke beim Passiv-flügel abweichend zum Standard.	Note: the position and orientation of the strikers on the second opening sash differ from the standard position and orientation.
Hinweis: Schließstücke (für T1 und T2) auf Stulpprofil sind vom Flügelüberschlag bemaßt.	Note: strikers (for CR1 and CR2) on the floating-mullion profile are dimensioned from the sash overlap.
in verriegeltem Zustand arretieren	Stop when locked
Laenge der Treibstangen nach Bedarf anpassen	Adapt the length of the connecting rods as required
min.	Minimum
Mindestabmessungen	Minimum dimensions
Öffnungsarten	Opening types
ohne DB	Without turn restrictor
Passiv Abweichung Treibstange T... / Abstand RC SST	Passive deviation from connecting rod CR... / distance RC striker
RBi	Frame width, internal
RC... Ausführung	RC... version
RHi	Frame height, internal
Schalthebel gefräst	Operating lever, routed
Schliessbewegung der Treibstange	Connecting rod closing movement
Schliesser	Cam
Schliessstück	Striker
Schließstücksitze	Striker positions
SH-Schliesser	SEC cam
SH-Schliessstück	SEC striker
SH-Verriegelung-Positionierung	SEC locking positioning
ST	Floating-mullion espagnolette, internal
ST-A	Floating-mullion espagnolette, surface-mounted
ST-AS	Floating-mullion espagnolette, surface-mounted, narrow version
ST-BS	Floating-mullion espagnolette, internal, accessible
ST-K	Floating-mullion shootbolt
ST koppelbar	Floating-mullion espagnolette, internal, couplable
ST-R	Floating-mullion espagnolette, slider
Stulpflügelgetriebe	Floating-mullion espagnolette
Stulpgetriebe	Floating-mullion espagnolette

Marking	Translation
Treibstangenmaße	Connecting rod dimensions
zusätzliche Hinweise Drehbegrenzer (DB)	Additional information on the turn restrictor (TR)

9.6.2 FM and FM, couplable | accessible

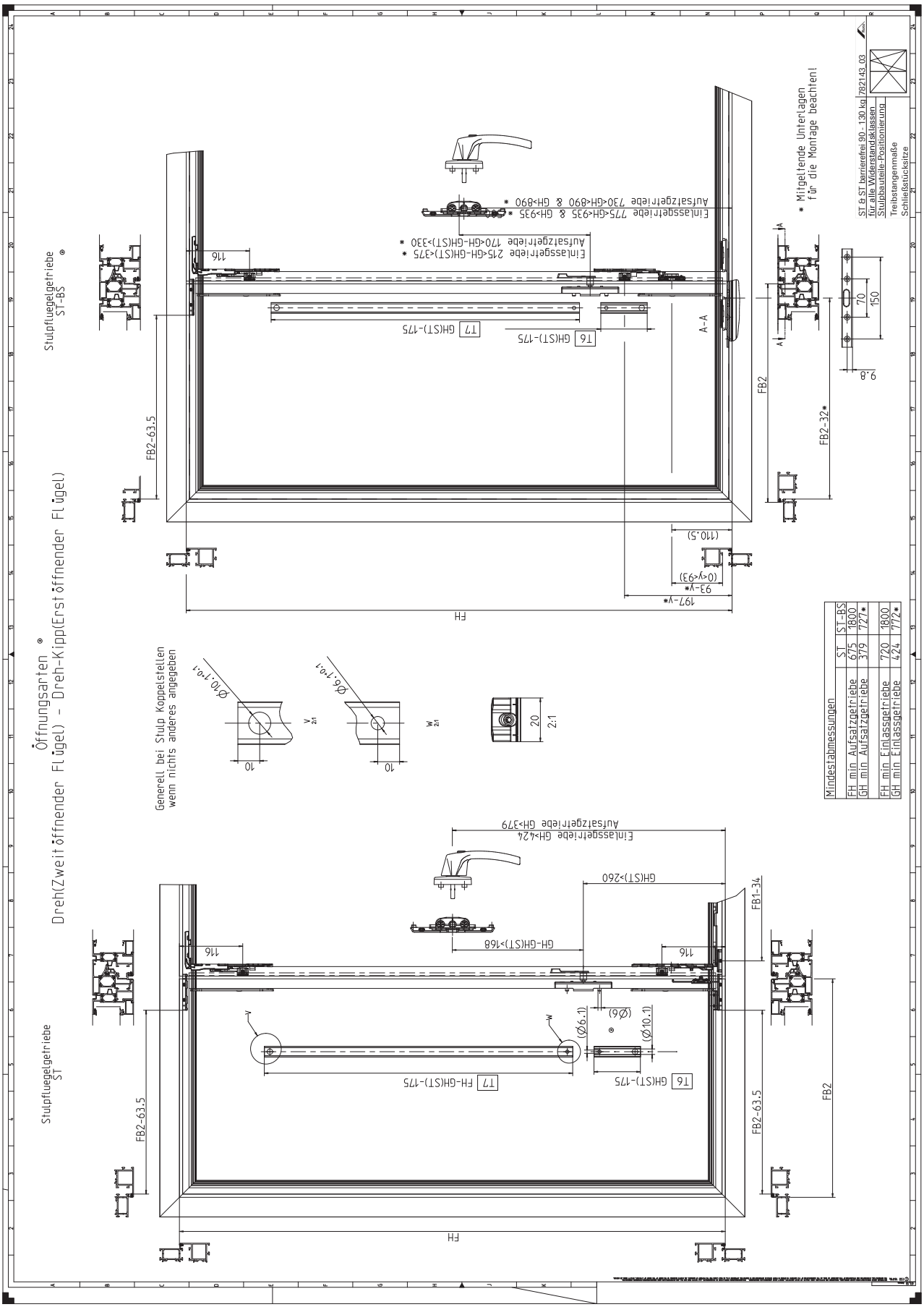

9.6.3 FM-Su and FM-R

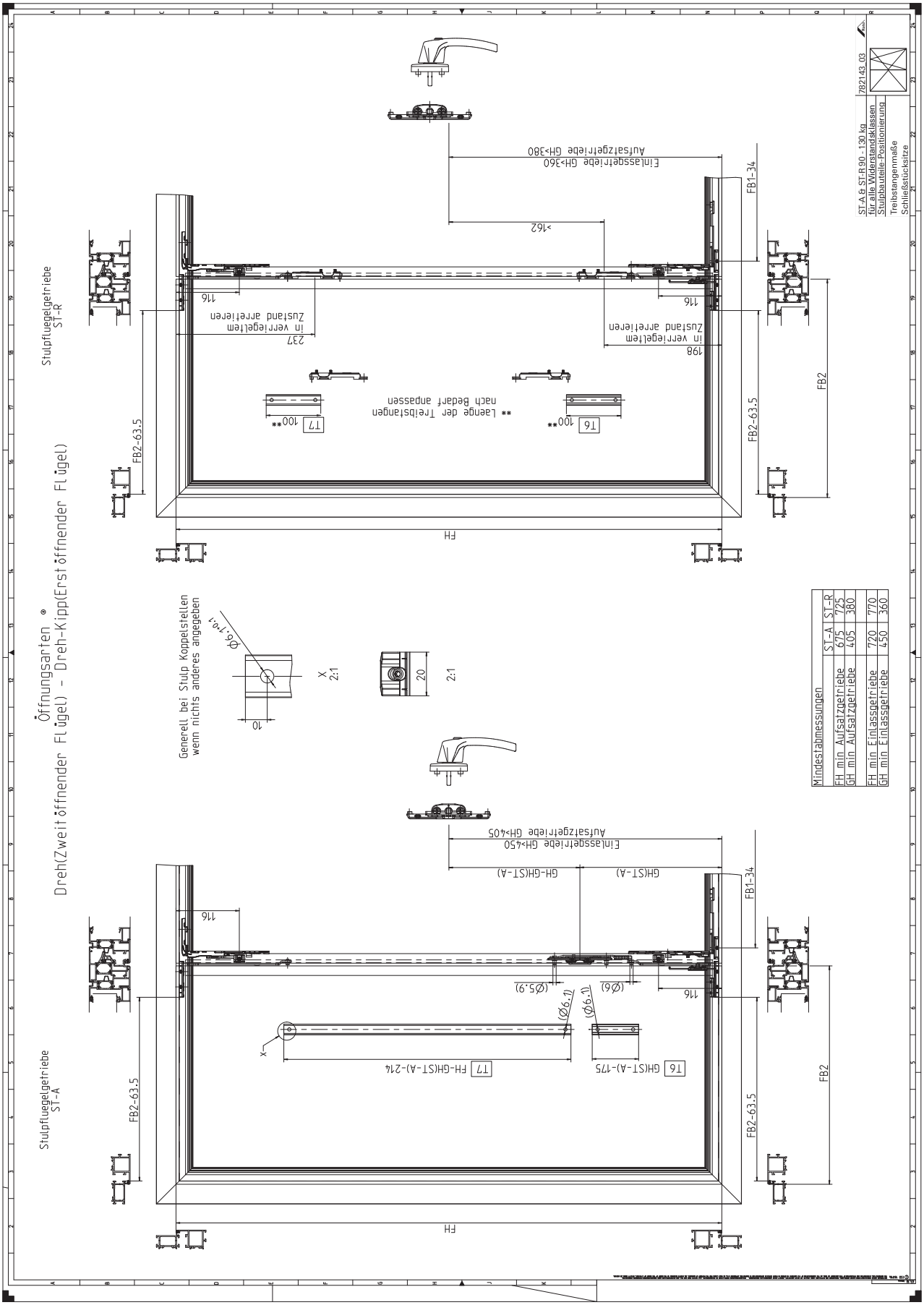

Mindestabmessungen	ST-A	ST-R
FH min Aufsatzgetriebe	675	725
GH min Aufsatzgetriebe	405	380
FH min Einlassgetriebe	720	770
GH min Einlassgetriebe	450	360

9.6.4 FM-SuN and FM-Sh

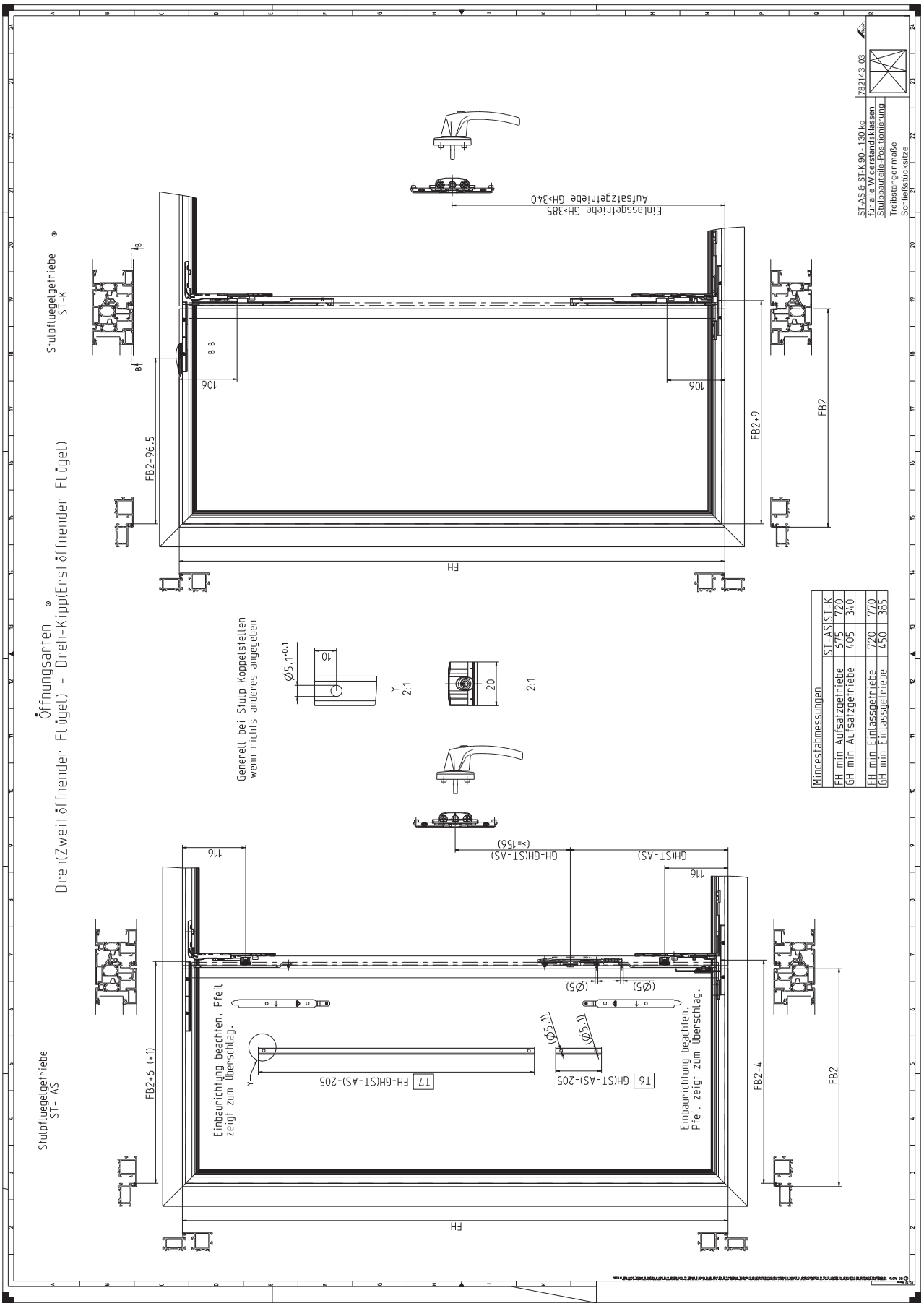

Mindestabmessungen	ST-AS	ST-K
FH min Aufsatzgetriebe	675	720
GH min Aufsatzgetriebe	405	340
FH min Einlassgetriebe	720	770
GH min Einlassgetriebe	450	385

9.6.5 FM, couplable | 90 - 130 kg

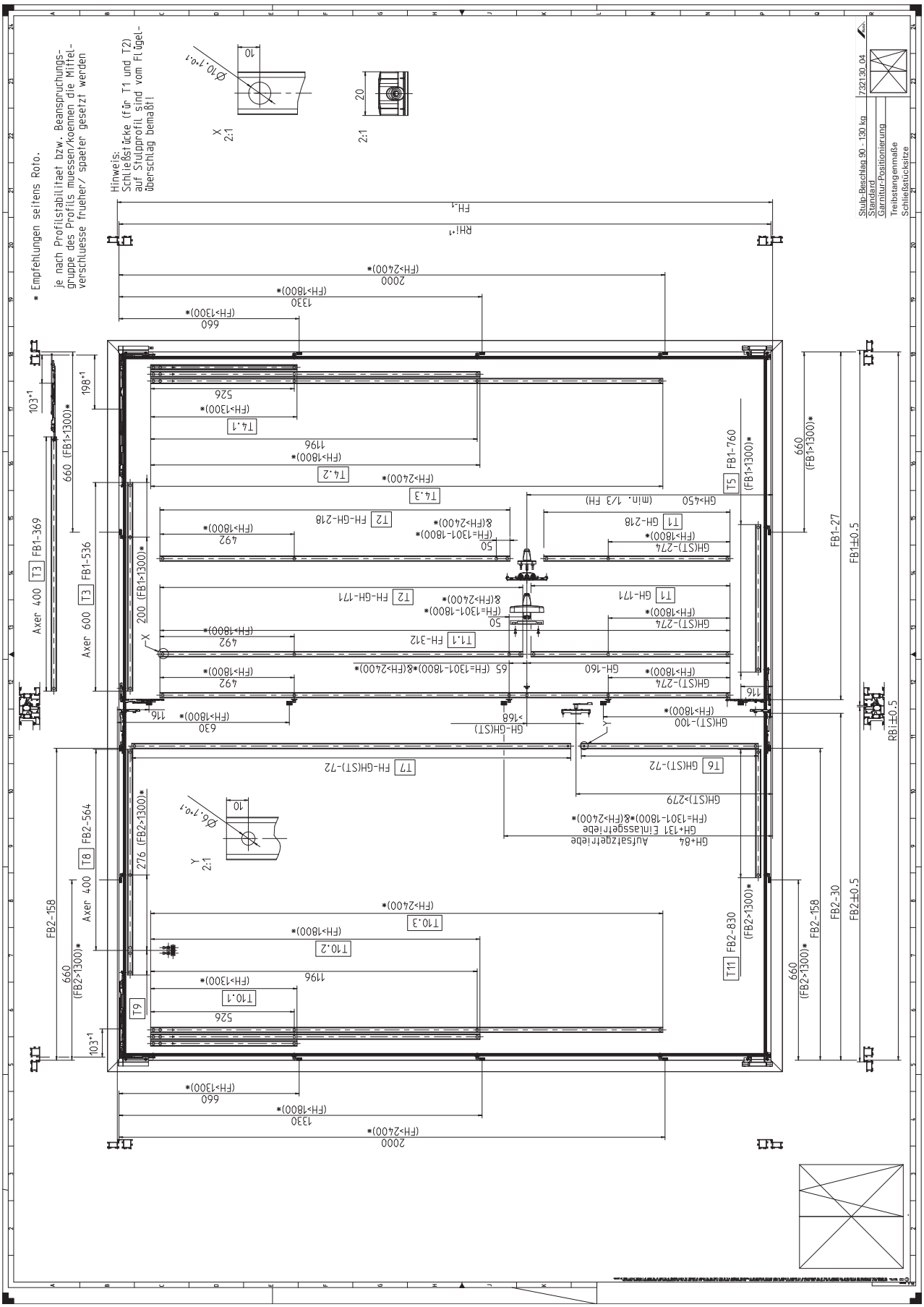

9.6.6 FM, couplable | RC 2 | 90 - 130 kg

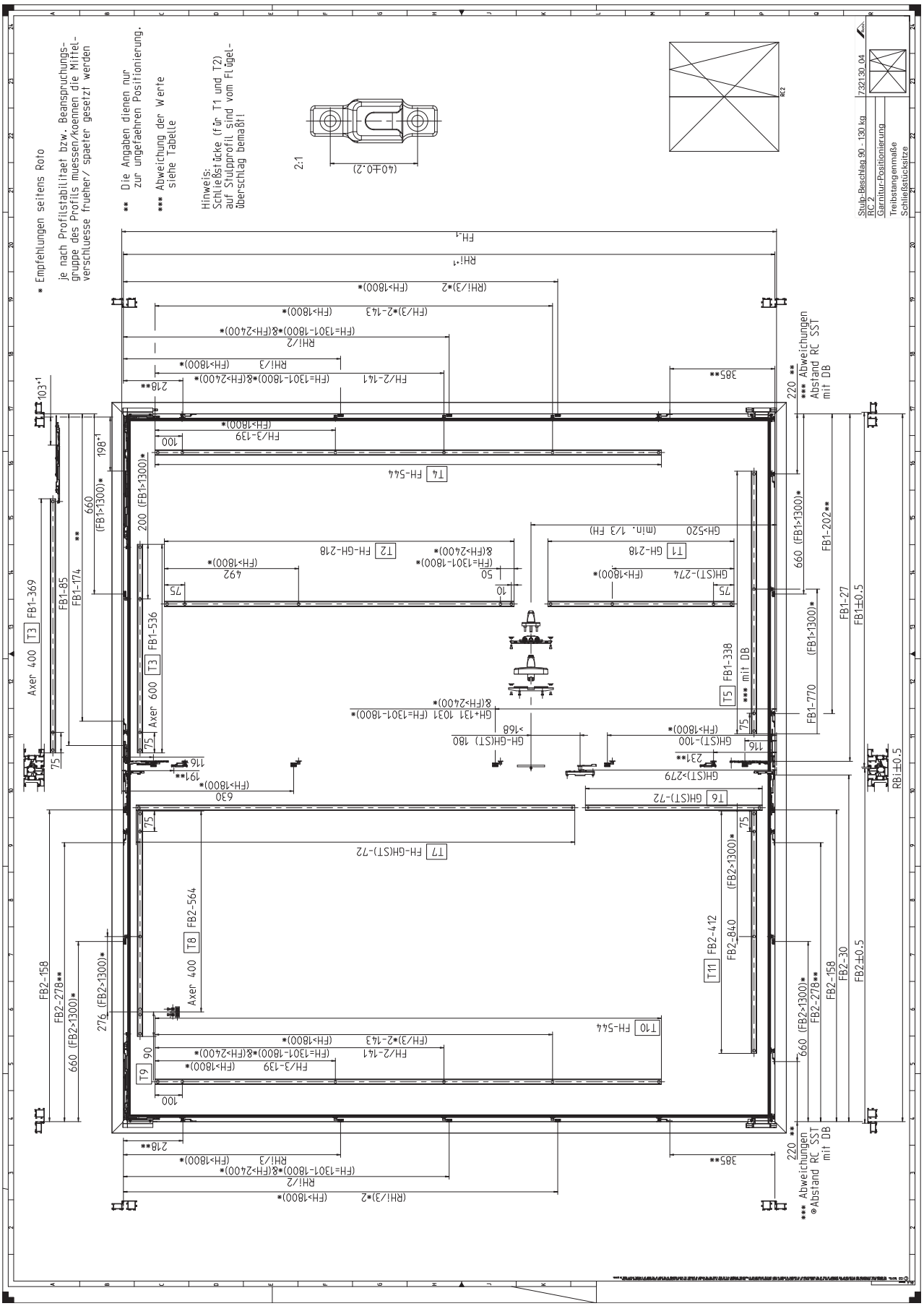

9.6.7 FM, couplable | RC 3 | 90 - 130 kg

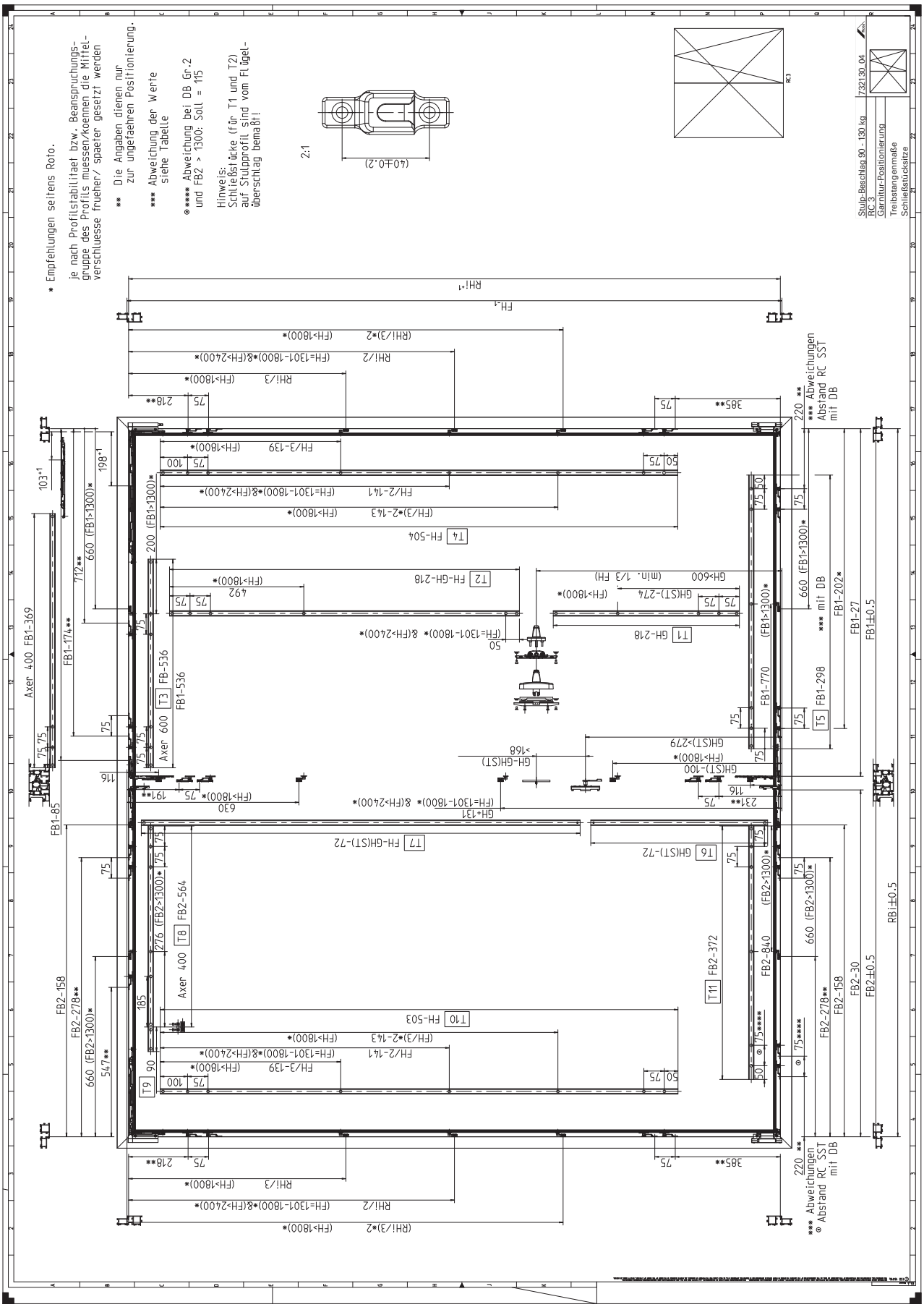

9.6.8 FM, couplable | 160 kg

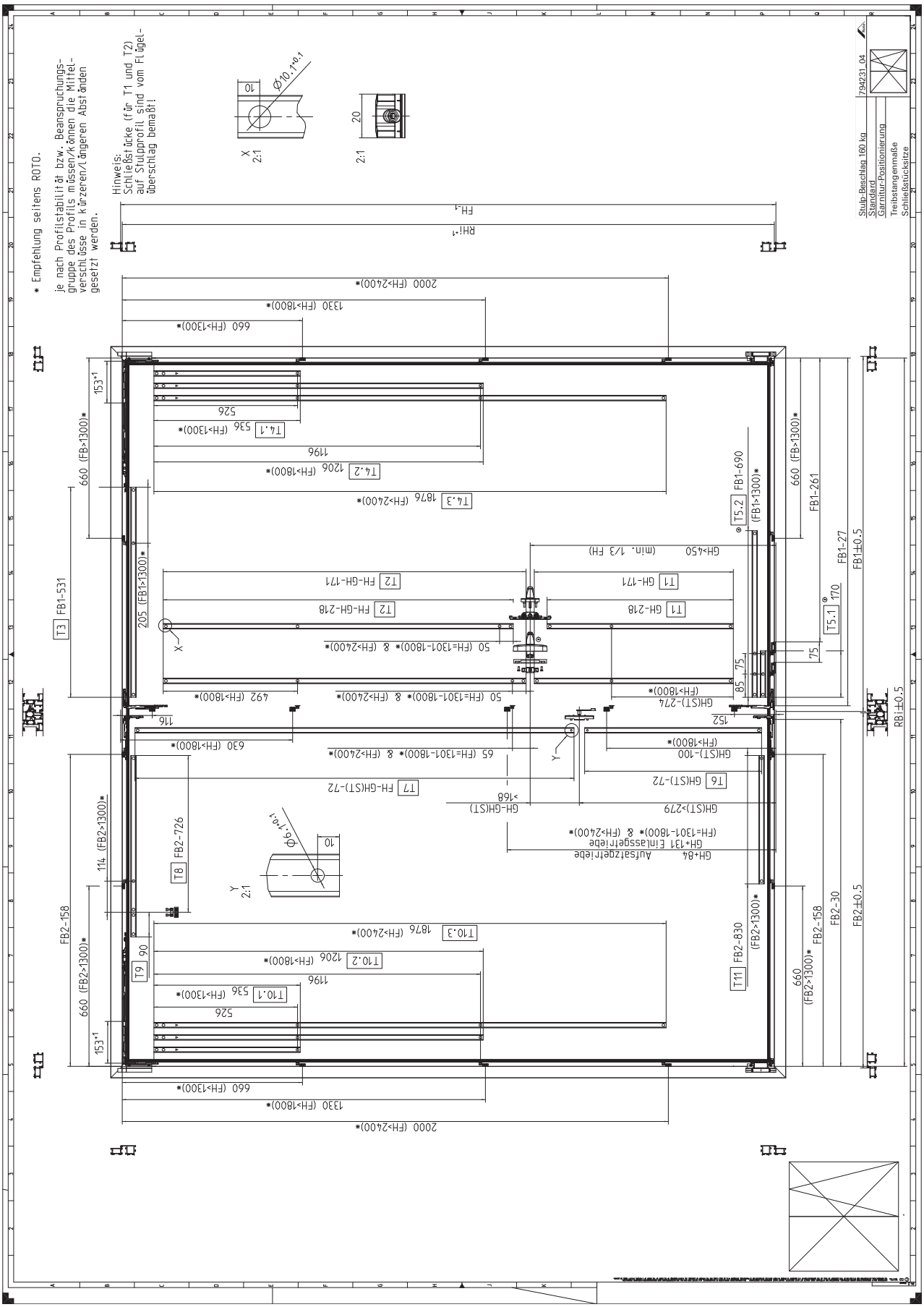

9.6.9 FM, couplable | RC 2 | 160 kg

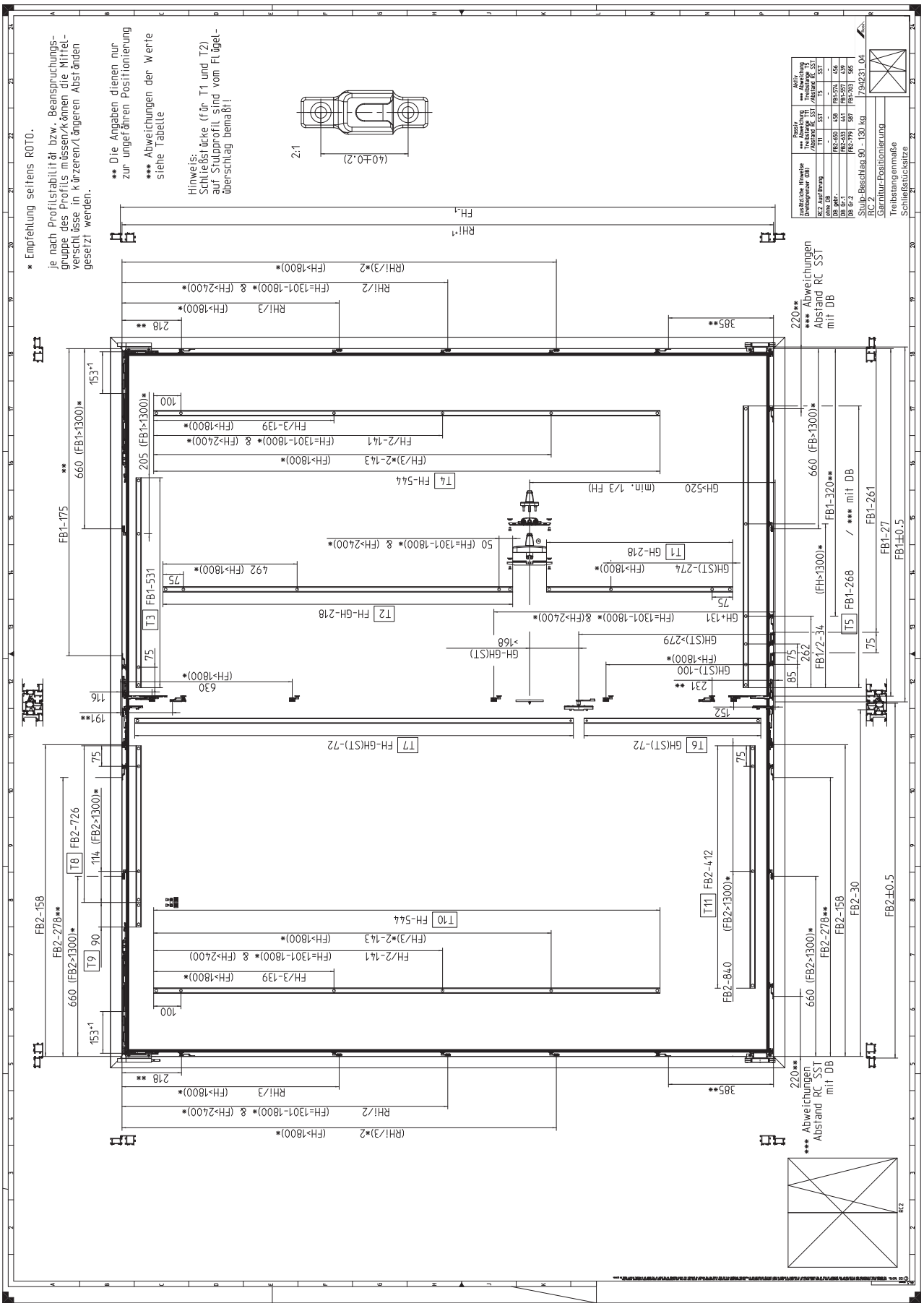

9.6.10 FM, couplable | RC 3 | 160 kg

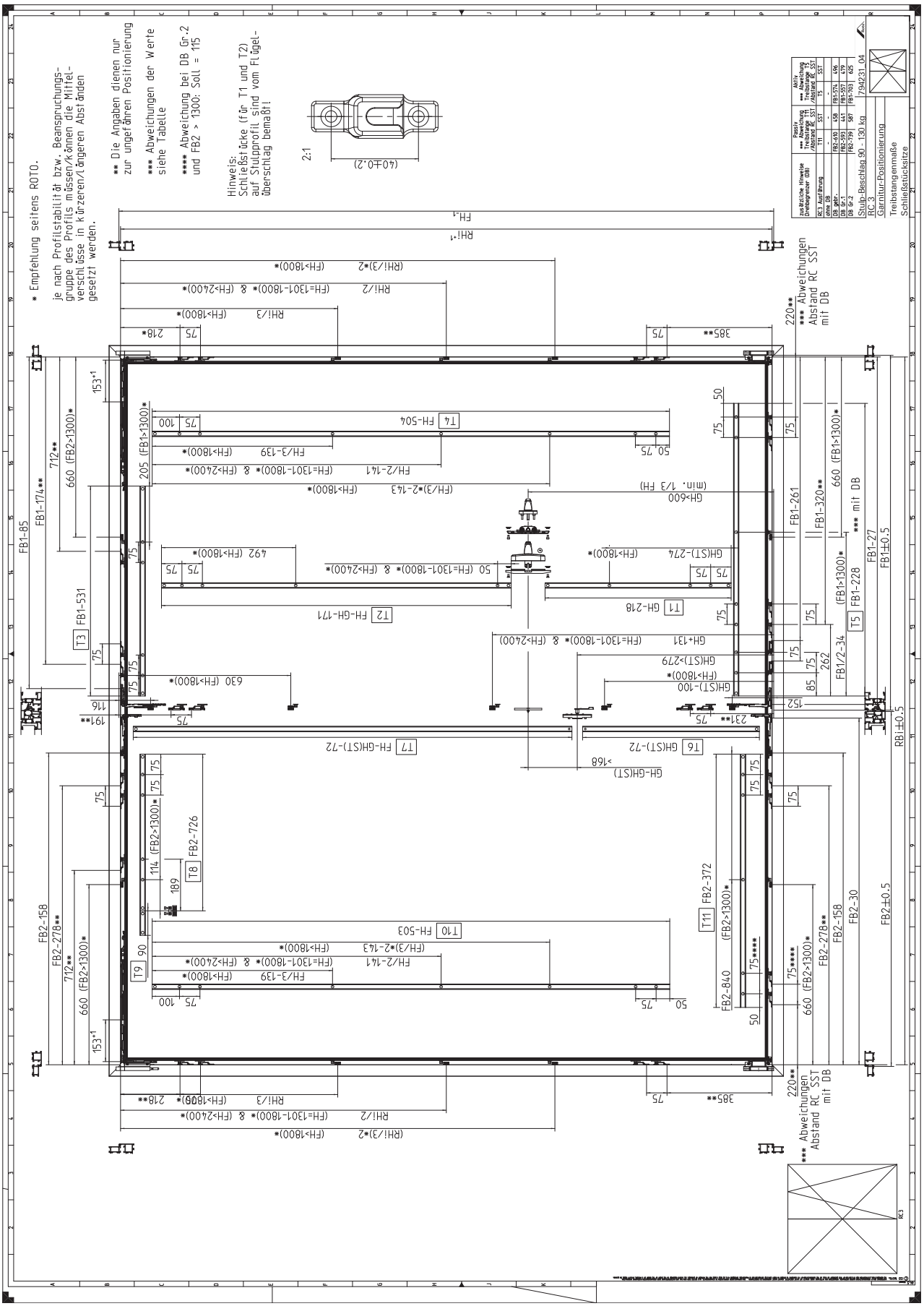

9.6.11 FM, couplable | SEC locking | RC 2 / RC 3

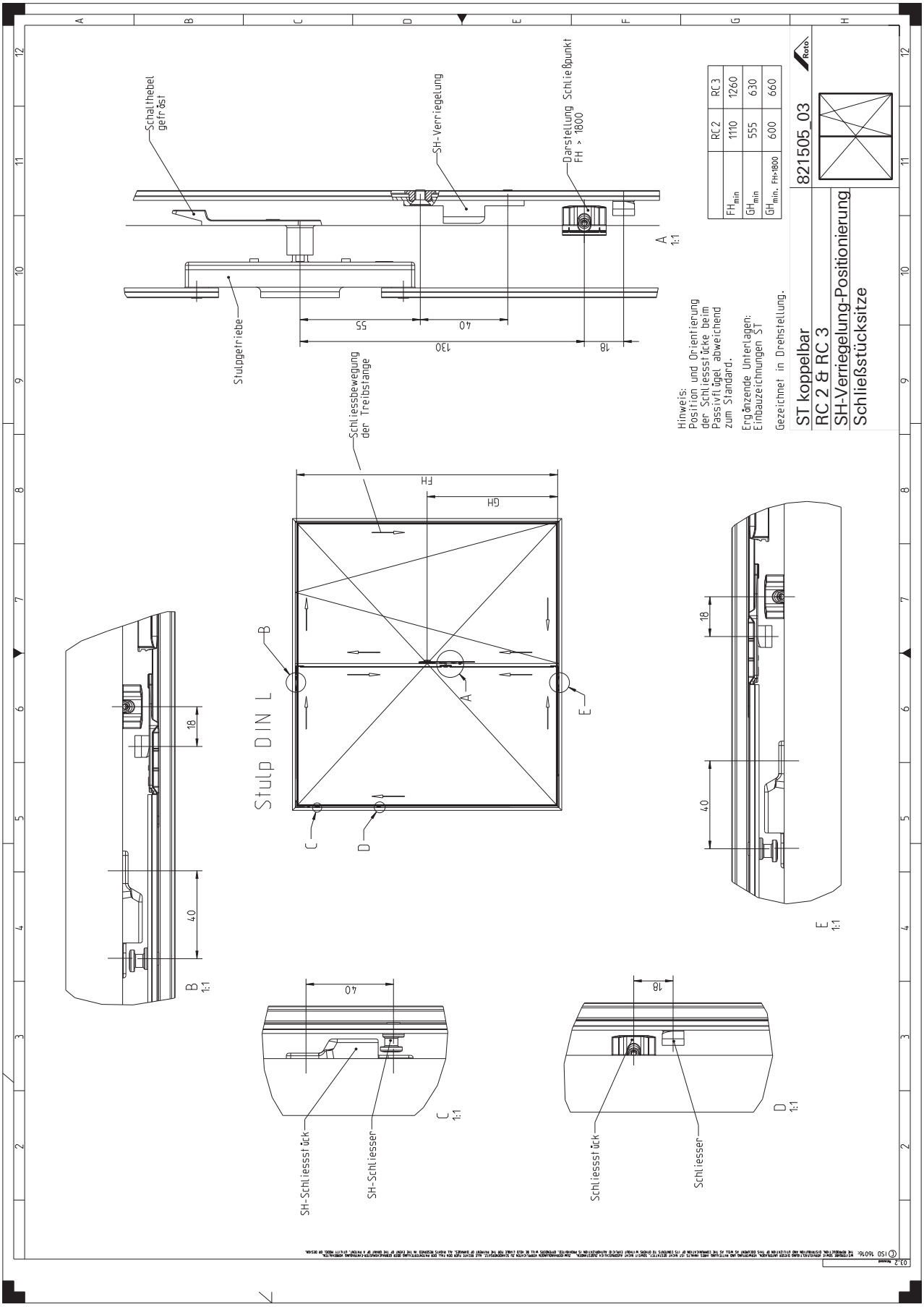

10 Adjustment

INFO
Roto hardware components may only be adjusted by authorised professionals when the element is installed.

10.1 Gasket compression adjustment

10.1.1 Cam, insertable

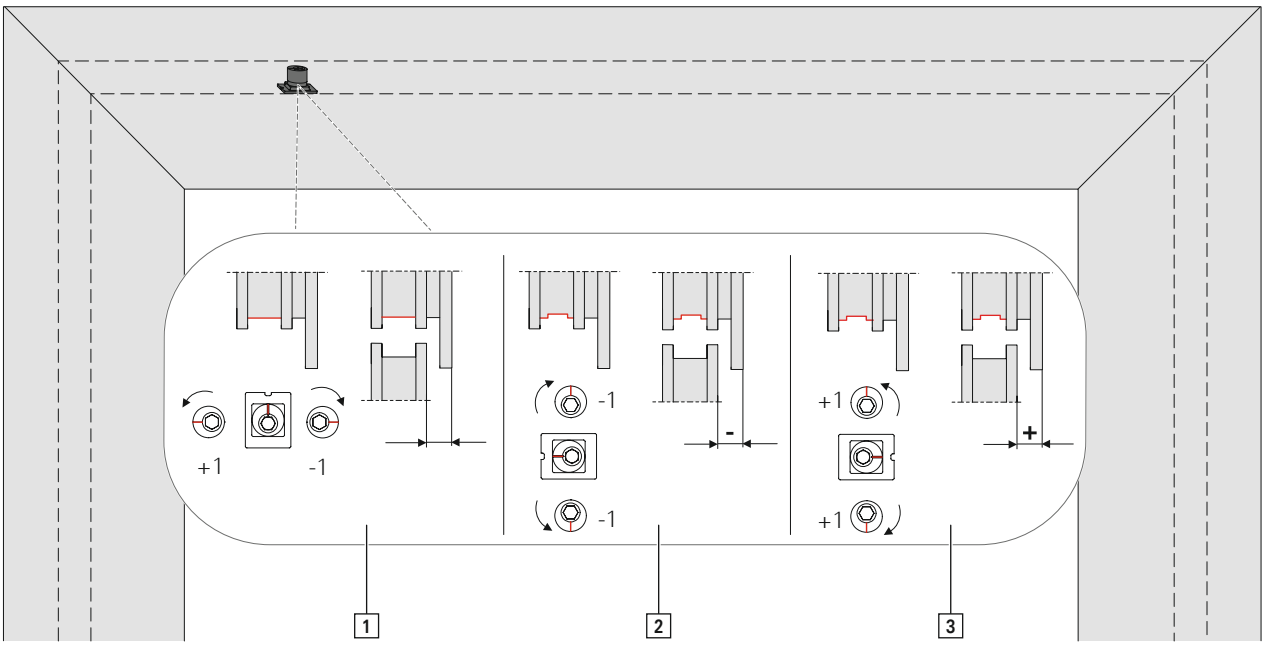

Adjusting the cam, insertable

1. Adjust the gasket compression on the cam with a size 4 hex key.

- [1] Increase / reduce the gasket compression.
- [2] Reduce the gasket compression.
- [3] Increase the gasket compression.

10.2 Tilt&Turn hardware

10.2.1 Lateral adjustment

10.2.1.1 Sash stay | 90 - 160 kg

Adjusting the sash stay

1. Open the window sash.

2. Lateral adjustment ±2 mm with size 4 hex key.

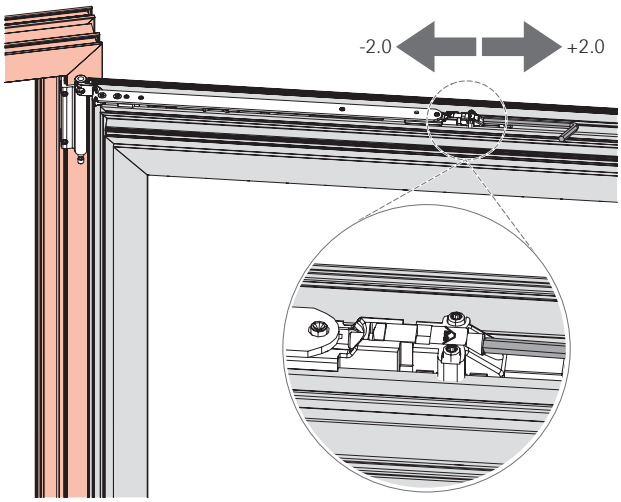

10.2.1.2 Sash stay | 200 kg

Adjusting the sash stay

1. Open the window sash.

2. Lateral adjustment -1 mm and +4 mm with size 4 hex key.

DANGER
Proceed with caution when unhinging the sash.
- Roto hardware components may only be adjusted by authorised professionals.
- The gap must be smaller than 5.5 mm.

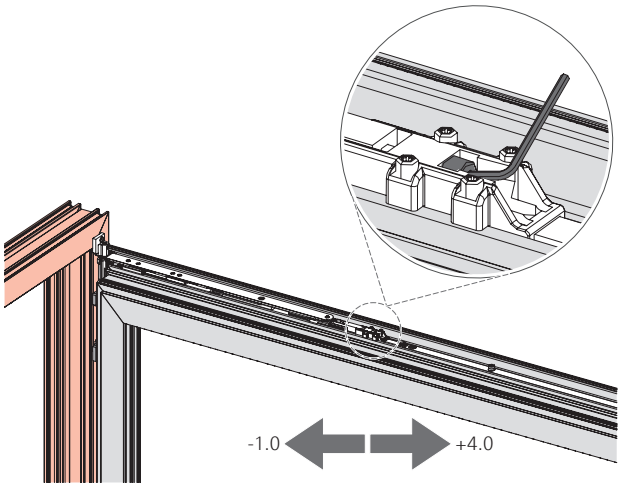

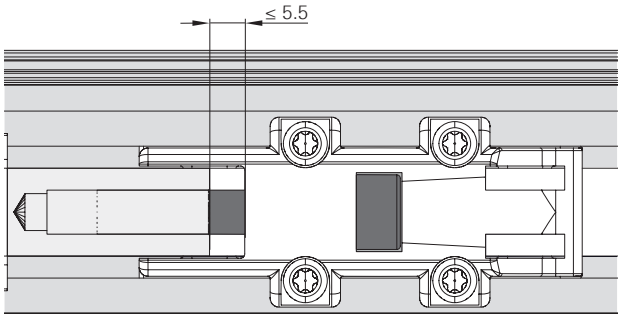

10.2.1.3 Pivot rest | 90 - 160 kg

Adjusting the pivot rest

⇨ Before adjustment:

- Remove the load on the sash and protect it from falling down.

1. Open the window sash.

2. Lateral adjustment ±1 mm using screw in the pivot rest with size 2.5 hex key.

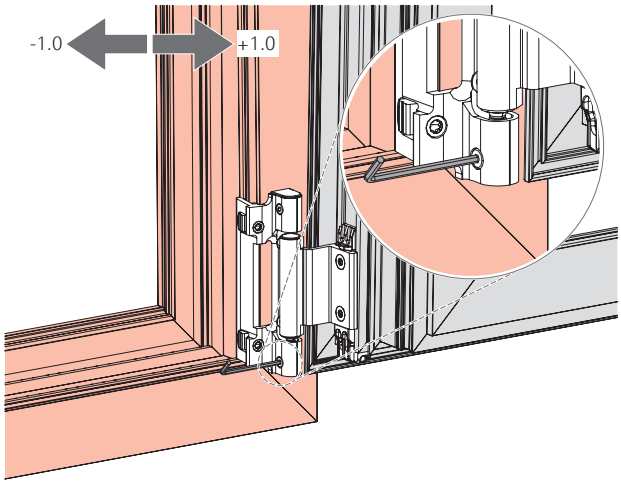

10.2.2 Height adjustment

10.2.2.1 Pivot rest | 90 - 130 kg

Adjusting the pivot rest

⇨ Before adjustment:

- On elements with SH > 2700 mm, perform adjustments on the corner hinge (see corner hinge | 160 kg → *from page 496*).
- Remove the load on the sash and protect it from falling down.
- Undo the clampable corner bracket on the corner hinge (loosen the screws [1] by one turn).
- Undo the screws on the hinge side of all T-O hinges.

Torque: 3.5 – 5.0 Nm

1. Open the window sash.

2. Height adjustment on the clampable corner bracket +1.5 mm / -1 mm with size 4 hex key.

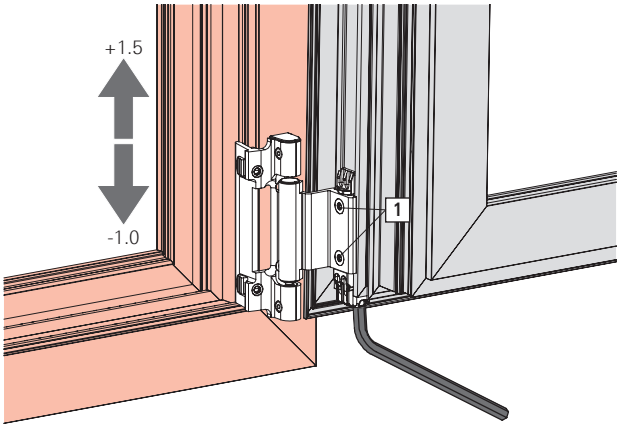

3. After adjustment, retighten all screws that were loosened.

10.2.2.2 Corner hinge | 160 kg

Adjusting the corner hinge

1. Tilt the window sash and remove the cap on the pivot rest and corner hinge [A].

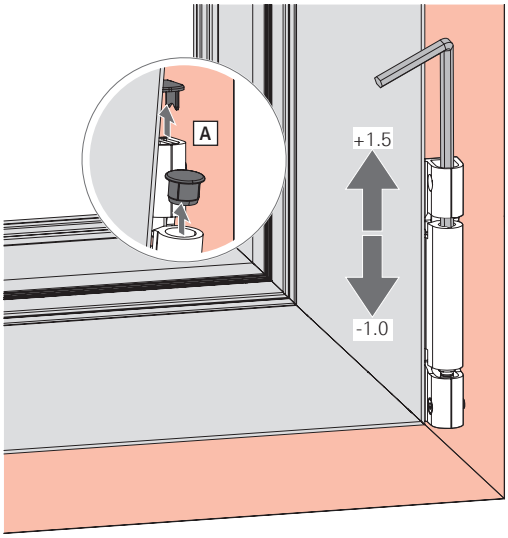

2. Return the window sash to the closed position.

3. Height adjustment using bearing in the hinge ±1.5 mm with size 4 hex key .

4. Tilt the window sash and fit the cap on the pivot rest and corner hinge.

10.2.2.3 Pivot rest | 200 kg

Adjusting the pivot rest

⇨ Before adjustment:

- Remove the load on the sash and protect it from falling down.

1. Remove the cap on the bearing.

2. Height adjustment +1.5 mm / -1 mm with size 4 hex key.

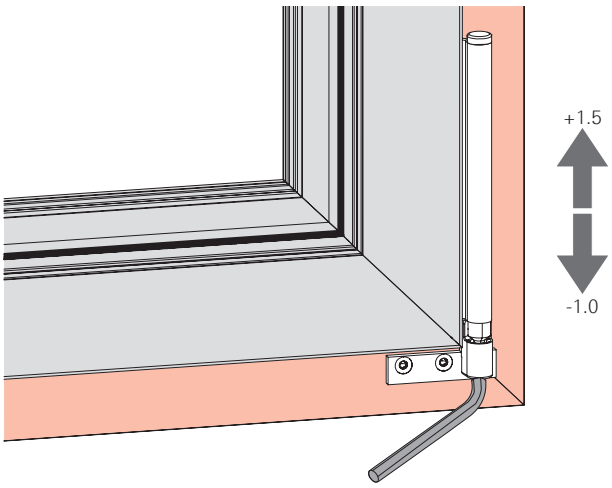

3. Place the cap on the bearing.

10.2.2.4 Sash lifter

Adjusting the sash lifter

1. Precision adjustment can be carried out via the eccentric on the sash lifter (lift arm adjustment).

2. Height adjustment ±0.75 mm using Phillips screwdriver.

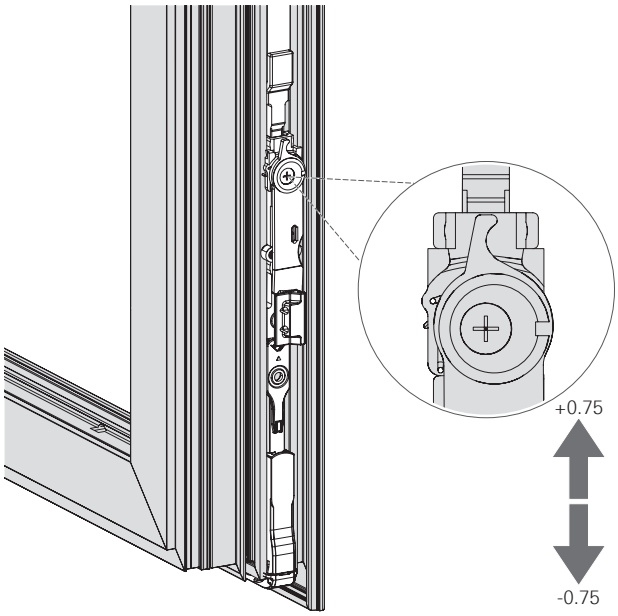

10.3 TiltFirst hardware

10.3.1 Lateral adjustment

10.3.1.1 Sash stay | 90 - 160 kg

Adjusting the sash stay

1. Open the window sash.

2. Lateral adjustment ±2 mm with size 4 hex key.

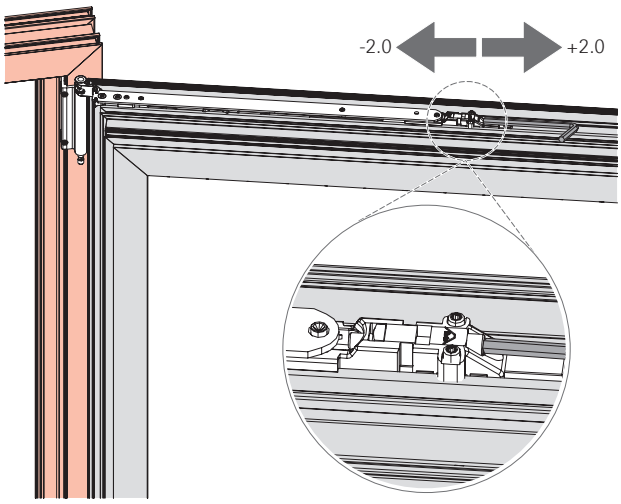

10.3.1.2 Pivot rest | 90 - 160 kg

Adjusting the pivot rest

⇨ Before adjustment:

- Remove the load on the sash and protect it from falling down.

1. Open the window sash.

2. Lateral adjustment ±1 mm using screw in the pivot rest with size 2.5 hex key.

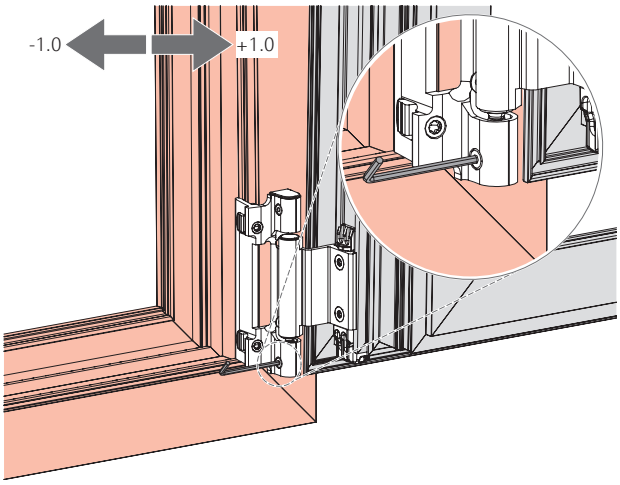

10.3.2 Height adjustment

10.3.2.1 Pivot rest | 90 - 130 kg

Adjusting the pivot rest

⇨ Before adjustment:

- On elements with SH > 2700 mm, perform adjustments on the corner hinge (see corner hinge | 160 kg → *from page 496*).
- Remove the load on the sash and protect it from falling down.
- Undo the clampable corner bracket on the corner hinge (loosen the screws [1] by one turn).

- Undo the screws on the hinge side of all T-O hinges.

Torque: 3.5 – 5.0 Nm

1. Open the window sash.

2. Height adjustment on the clampable corner bracket +1.5 mm / -1 mm with size 4 hex key.

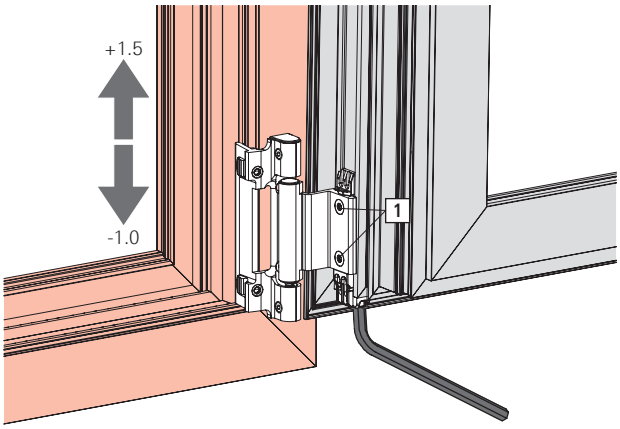

3. After adjustment, retighten all screws that were loosened.

10.3.2.2 Corner hinge | 160 kg

Adjusting the corner hinge

1. Tilt the window sash and remove the cap on the pivot rest and corner hinge [A].

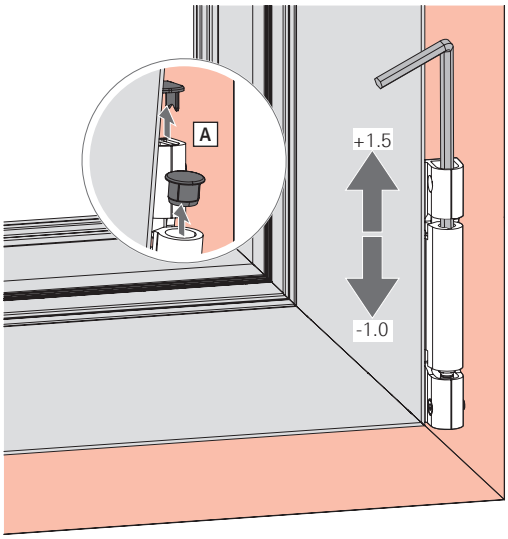

2. Return the window sash to the closed position.

3. Height adjustment using bearing in the hinge ±1.5 mm with size 4 hex key .

4. Tilt the window sash and fit the cap on the pivot rest and corner hinge.

10.4 Turn-Only hardware

10.4.1 Lateral adjustment

10.4.1.1 CD hinge | 50 kg

1. Unhinge the sash → *from page 373*.

INFO
Unless otherwise stated, dismantling is performed in reverse order to installation.

2. Remove the Turn-Only hinge bushes and reinstall in the required position.

INFO
Only install Turn-Only hinge bushes that are not damaged.

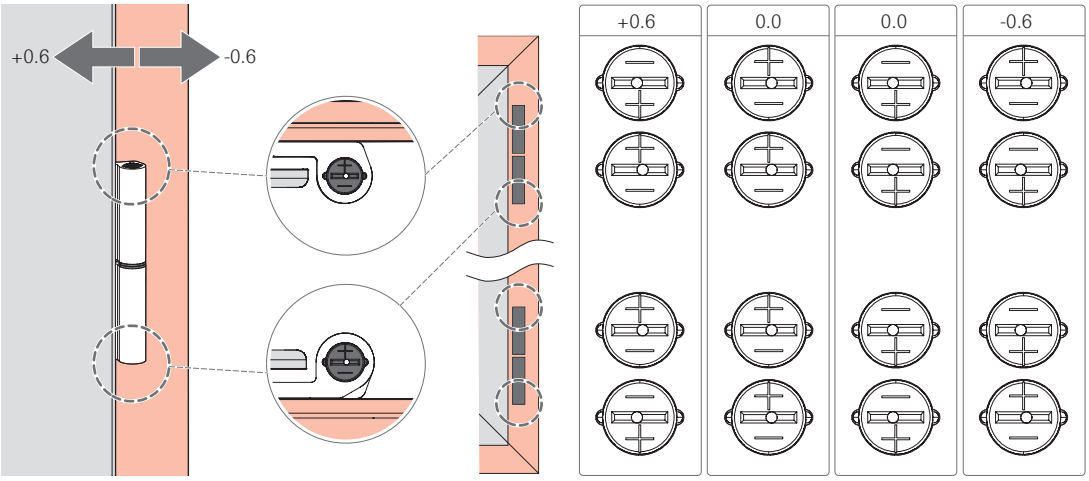

Join the sash and frame → *from page 373*.

10.4.1.2 CD hinge | 80 kg or 100 kg

1. Unhinge the sash → *from page 373*.

INFO
Unless otherwise stated, dismantling is performed in reverse order to installation.

2. Remove the Turn-Only hinge bushes and reinstall in the required position.

INFO
Only install Turn-Only hinge bushes that are not damaged.

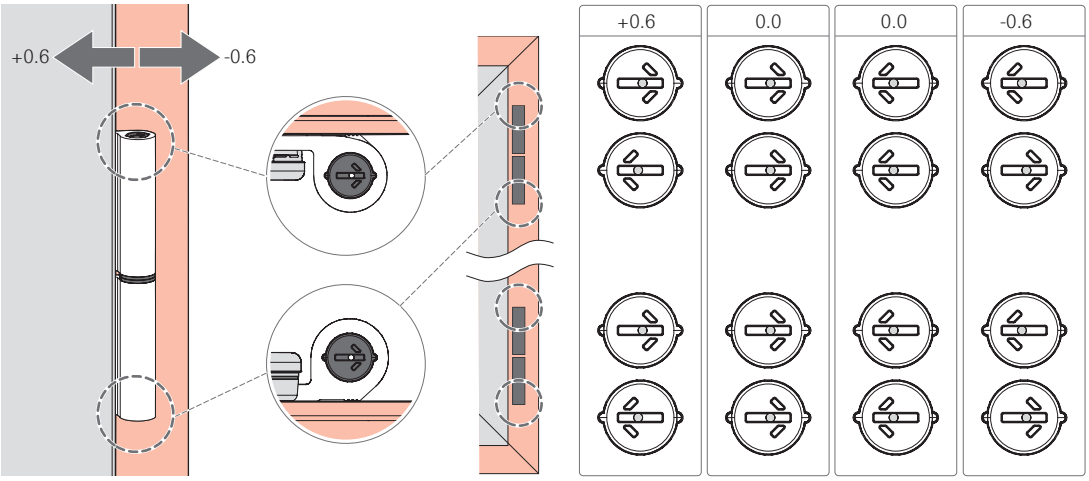

Join the sash and frame → *from page 374*.

10.4.1.3 Pivot rest | 90 - 160 kg

Adjusting the pivot rest

⇨ Before adjustment:

- Remove the load on the sash and protect it from falling down.

1. Open the window sash.

2. Lateral adjustment ±1 mm using screw in the pivot rest with size 2.5 hex key.

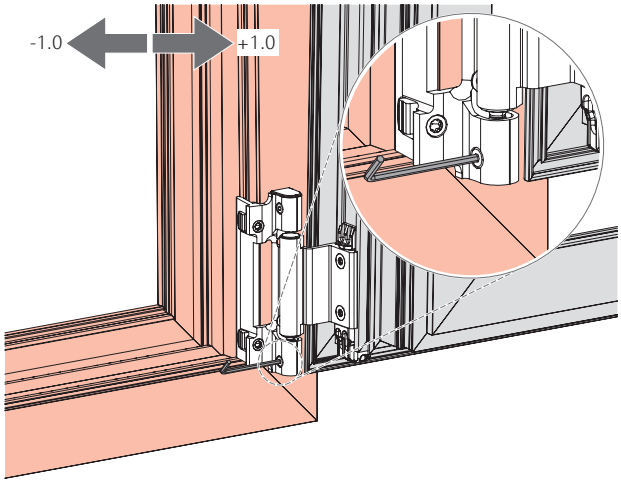

10.4.1.4 Turn-Only stay hinge | 90 - 160 kg

Adjusting the Turn-Only stay hinge

1. Open the window sash.

2. Lateral adjustment ±2 mm with size 4 hex key.

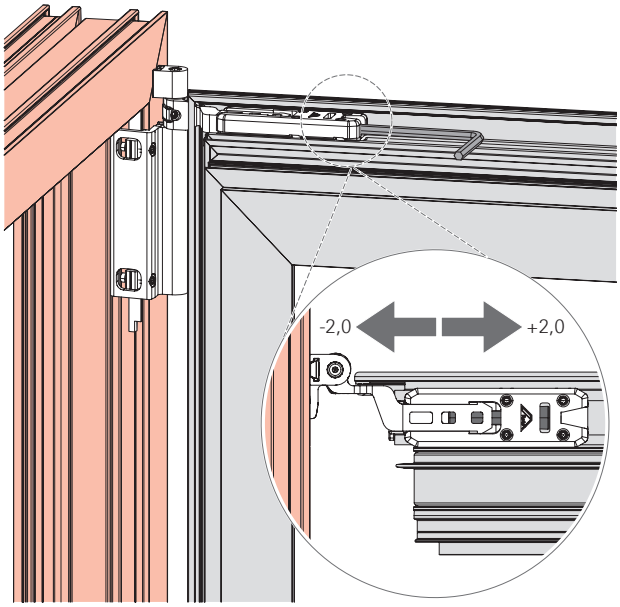

10.4.2 Height adjustment

10.4.2.1 Pivot rest | 90 - 130 kg

Adjusting the pivot rest

⇨ Before adjustment:

- On elements with SH > 2700 mm, perform adjustments on the corner hinge (see corner hinge | 160 kg → *from page 496*).
- Remove the load on the sash and protect it from falling down.
- Undo the clampable corner bracket on the corner hinge (loosen the screws [1] by one turn).

- Undo the screws on the hinge side of all T-O hinges.

Torque: 3.5 – 5.0 Nm

1. Open the window sash.

2. Height adjustment on the clampable corner bracket +1.5 mm / -1 mm with size 4 hex key.

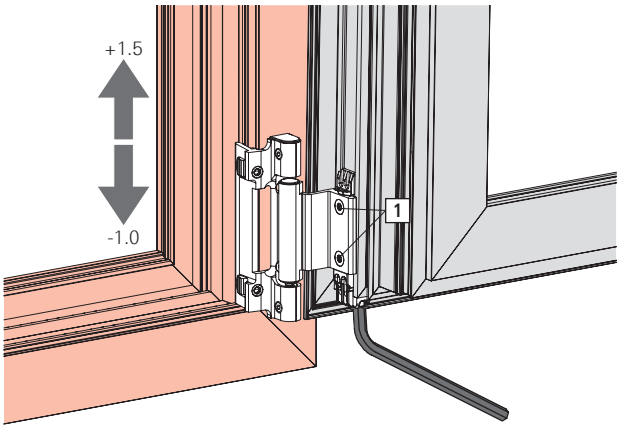

3. After adjustment, retighten all screws that were loosened.

10.4.2.2 Corner hinge | 160 kg

Adjusting the corner hinge

1. Tilt the window sash and remove the cap on the pivot rest and corner hinge [A].

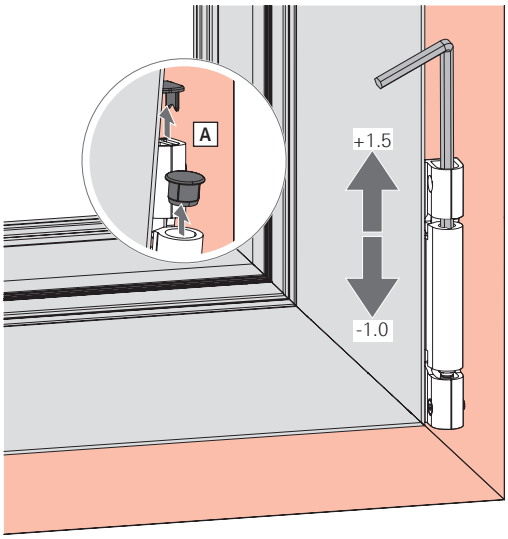

2. Return the window sash to the closed position.

3. Height adjustment using bearing in the hinge ±1.5 mm with size 4 hex key .

4. Tilt the window sash and fit the cap on the pivot rest and corner hinge.

10.4.2.3 Pivot rest | 200 kg

Adjusting the pivot rest

⇨ Before adjustment:

- Remove the load on the sash and protect it from falling down.

1. Remove the cap on the bearing.
2. Height adjustment +1.5 mm / -1 mm with size 4 hex key.

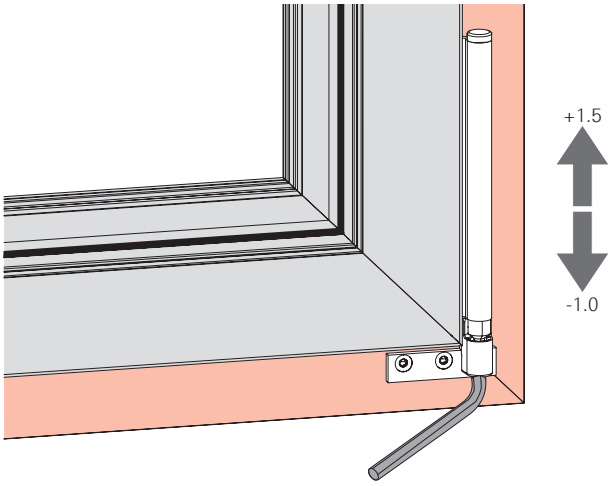

3. Place the cap on the bearing.

10.4.2.4 Corner hinge | 300 kg

Adjusting the corner hinge

1. Remove the load from the window sash. Remove the cap on the bearing [A].

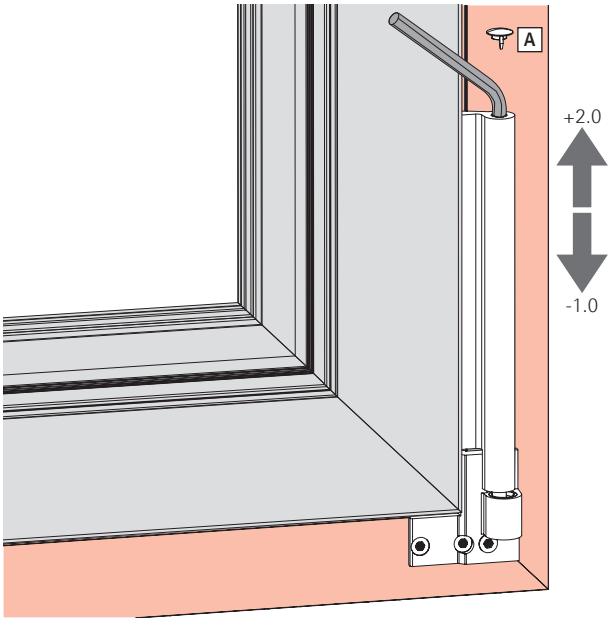

2. Height adjustment +2 mm / -1 mm with size 4 hex key.
3. Place the cap on the bearing.

10.4.2.5 Sash lifter

Adjusting the sash lifter

1. Precision adjustment can be carried out via the eccentric on the sash lifter (lift arm adjustment).

2. Height adjustment ±0.75 mm using Phillips screwdriver.

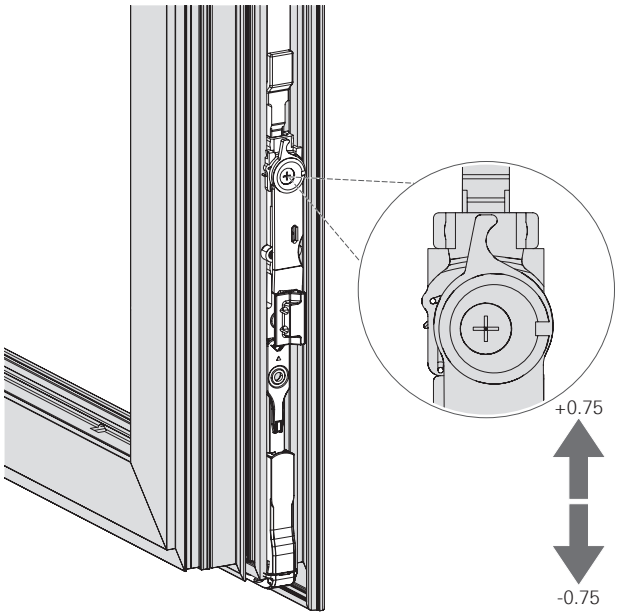

11 Operation

11.1 Operating information

The windows and balcony doors are operated using a handle.

The following symbols illustrate the different handle positions and the resultant sash positions of the windows and balcony doors.

11.1.1 Handle position with Tilt&Turn hardware

Handle position	Sash position	Meaning
		Sash in closed position.
		Sash in turned, open position.
	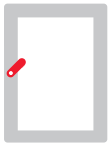	Sash in night ventilation position.
		Sash in tilted, open position.

11.1.2 Handle position with TiltFirst hardware

Handle position	Sash position	Meaning
		Sash in closed position.
	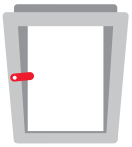	Sash in tilted, open position.
	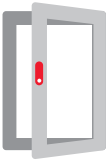	Sash in turned, open position.

11.1.3 Handle position with Turn-Only hardware

Handle position	Sash position	Meaning
		Sash in closed position.
		Sash in turned, open position.

11.1.4 Handle position with Tilt-Only hardware

Handle position	Sash position	Meaning
TiSt		
		Sash in closed position.
		Sash in tilted, open position.
TiSs		
		Sash in closed position.
		Sash in tilted, open position.

11.1.5 Incorrect position

Handle position	Sash position	Meaning
	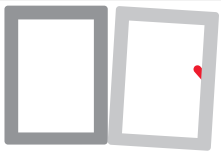	Sash in incorrect position.

11.2 Fault assistance

Fault	Cause	Corrective action	To be carried out by
Handle is difficult to turn.	Frame components have not been greased.	Grease the frame components.	☐
	Handle is damaged.	Replace the handle.	■
	Handle screwed into place too tightly.	Undo the screw fixing slightly.	■
	Sash components with slanting screws.	Screw the sash components in straight.	■
	Sash components are damaged.	Replace the sash components.	■
	Incorrect striker positions.	Adapt the striker positions.	■
	Sash stay gasket compression is too strong (accumulation on gasket).	Adjust the sash stay gasket compression or clean the gasket.	■
Handle cannot be turned 180°.	Sash components hinged or installed incorrectly.	Check the setting in the turn position (potentially rehang – start from the T&T espagnolette).	■
	Connecting rod dimensions not OK.	Check the connecting rod dimensions.	■
Sash falls into the tilt position when in the turn position.	Excessive clearance at the top.	Check the fit of the corner hinge.	■
		Check the fit of the pivot rest.	■
		Adjust the corner hinge so that it is positioned higher (pay attention to the tilt striker).	■
Sash falls into the turn position when in the tilt position.	Tilt striker damaged.	Replace the tilt striker.	■
	Scissor stay inclusion not OK due to incorrect connecting rod dimensions.	Check the connecting rod dimensions.	■
Sash scrapes in the tilt position.	Insufficient clearance at the top.	Lower the corner hinge (pay attention to the tilt striker).	■
Locking cam brushes against the striker.	Sash mounted incorrectly.	Rehang the sash.	■
	Incorrect striker position.	Adapt the striker position.	■

☐ = May be carried out by a specialist company or the end user

■ = **Must** be carried out by a specialist company

12 Maintenance

CAUTION

Performing maintenance work incorrectly can lead to injuries.

Performing maintenance incorrectly can lead to injuries.

- Ensure that there is sufficient space for installation before starting work.
- Ensure that the installation site is clean and tidy.
- Always have hardware adjustment and replacement work performed by a specialist company.
- Secure the sash against unintentionally opening or closing.
- Do not unhinge the sash for maintenance.

ATTENTION

Incorrect or improper testing may cause property damage.

Incorrect or improper testing of the hardware may cause the element to malfunction.

- Have the hardware checked by a specialist company when installed.
- If defects need to be remedied, have the element unhinged and remounted by a specialist company.

INFO

The manufacturer must draw the attention of builders and end consumers to these maintenance instructions.

Roto Frank Fenster- und Türtechnologie GmbH recommends the manufacturer conclude a maintenance agreement with their end users.

No legal claims can be derived from the following recommendations; their application is to be based on the specific individual case.

	Responsibility	
Maintenance interval	☐	→ *from page 510*
Cleaning		→ *from page 510*
Clean hardware	☐	
Care		→ *from page 510*
Lubricate movable parts	☐	
Lubricate locking points	☐	
Performance test		→ *from page 512*
Check that hardware components are fitted securely	☐	
Inspect hardware components for wear	☐	
Check that movable parts work properly	☐	
Check that locking points work properly	☐	
Check ease of movement	■	
Repair		→ *from page 512*
Retighten screws	■	
Replace damaged components	■	

☐ = May be carried out by a specialist company or the end user

■ = **Must** be carried out by a specialist company

12.1 Maintenance intervals

ATTENTION

Failure to adhere to maintenance intervals may cause property damage.

The maintenance interval for all tasks relating to the hardware components is **annually** at the least. In hospitals, schools and hotels, the maintenance interval is **six-monthly**.
Regular maintenance is necessary in order to maintain the proper and smooth-running operation of the hardware and to prevent premature wear or even defects.

- Determine and adhere to the appropriate maintenance interval in accordance with the ambient conditions.

12.2 Cleaning

ATTENTION

Using incorrect cleaning agents and sealing compounds may cause property damage.

Cleaning agents and sealing compounds may damage the surfaces of components and gaskets.

- Do not use aggressive or flammable liquids, acidic cleaners or abrasive cleaners.
- Only use mild, pH-neutral cleaning agents that have been diluted.
- Apply a thin protective film to the components, for example using a cloth soaked in oil.
- Avoid aggressive vapours (e.g. produced by formic acid, acetic acid, ammonia, amine compounds, ammonia compounds, aldehyde, carbolic acid, chlorine, tannic acid) around the element.
- Do not use any acetic acid-crosslinking or acid-crosslinking sealing compounds or those with the aforementioned constituents as both direct contact with the sealing compound and its fumes can corrode the surface of the components.

Cleaning the hardware

- Clean deposits and contaminants off the hardware using a soft cloth.
- Lubricate movable parts and locking points after cleaning. → *12.3 "Care" from page 510*
- Apply a thin protective film to the hardware, for example using a cloth soaked in oil.

12.3 Care

ATTENTION

Using incorrect lubricants may cause property damage.

Substandard lubricants can prevent the hardware from working properly.

- Use high-quality lubricants.
- Only use resin-free and acid-free lubricants.

ATTENTION

Cleaning agents and lubricants may pollute the environment.

Leaking or excess cleaning agents and lubricants may pollute the environment.

- Remove any leaking or excess cleaning agents and lubricants.
- Dispose of cleaning agents and lubricants separately and properly.
- Observe the applicable directives and national laws.

Ease of movement can be improved by lubricating or adjusting the hardware. All functional hardware components must be lubricated on a regular basis.

Recommended lubricants

- Roto NX / NT grease

INFO
The figure displays the positioning of potential lubrication points. The figure does not necessarily match the installed hardware. The quantity of lubrication points varies depending on the size and design of the element.

12.3.1 Roto AL

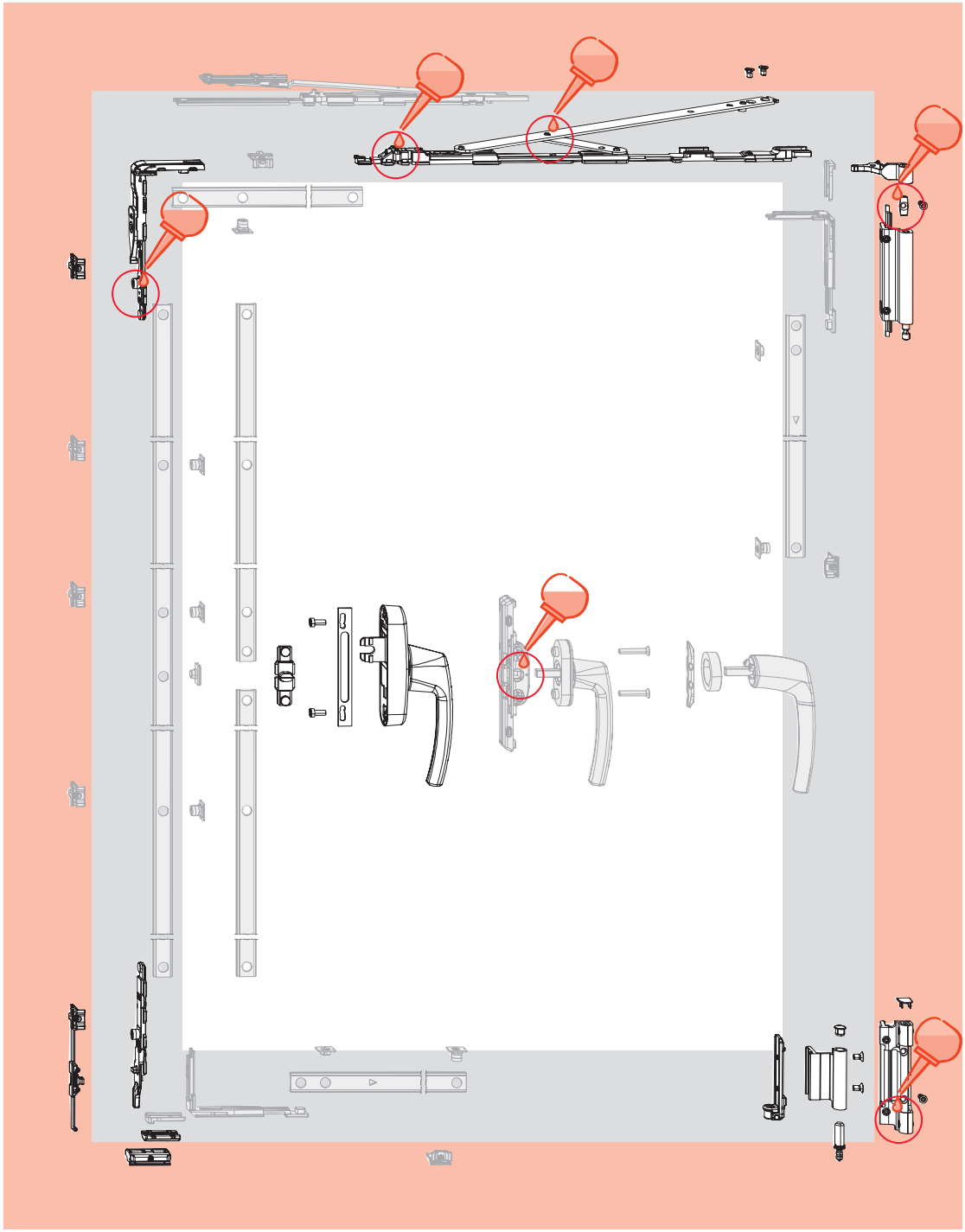

12.4 Performance test

WARNING

Improper repair work may pose a risk of death!

Improper maintenance may prevent the element from working properly and make it less safe to use.

- Always have repairs performed by a specialist company.

Check for proper operation:

- Inspect hardware components for damage, deformation and a firm fit.
- Check that windows or balcony doors run smoothly by opening and closing them.
- Check the window or balcony door gaskets for elasticity and fit.
- Check closed windows or balcony doors to ensure that they are leakproof.
- Locking and unlocking torque max. 10 Nm. The test can be performed using a torque wrench.

Have malfunctions remedied by a specialist company.

12.5 Repair

WARNING

Improper repair work may pose a risk of death!

Improper maintenance may prevent the element from working properly and make it less safe to use.

- Always have repairs performed by a specialist company.

ATTENTION

Improper screw fixings may cause property damage.

Loose or faulty screws can prevent the hardware from working properly.

- Check that the individual screws are secure and seated correctly.
- Tighten or replace loose or faulty screws.
- Use only the suggested screws.

Repair work includes replacing and repairing components and is only necessary if components have become damaged after wear or as a result of external circumstances. The hardware must be secured reliably in order to ensure that the element works properly and is safe to use.

The following tasks must only be performed by a specialist company:

- All adjustment work on the hardware,
- Replacing hardware or hardware components,
- Installing and removing windows, doors or balcony doors

The specialist company must observe the following:

- Perform the necessary repair work properly, according to generally recognised engineering practice and in accordance with the applicable regulations.
- Do not perform makeshift repairs on worn or damaged components.
- Only use original or approved spare parts for repairs.

12.6 Preventative measures

These measures are intended to preserve the surface finish and durability. They aim to prevent premature wear or contamination and thereby simplify maintenance.

Protection against corrosion

Cleaning agents can corrode the surface of the hardware.

Protect the hardware:

- Do not use aggressive or flammable liquids, acidic cleaners or abrasive cleaners.
- Only use mild, pH-neutral cleaning agents that have been diluted.

- Apply a thin protective film to the hardware, for example using a cloth soaked in oil.
- Only use high-quality components for repairs, such as stainless-steel screws.

Protection against dirt

Contamination prevents the hardware working properly.

Protect the hardware:

- Remove deposits and contaminants caused by construction materials before they bond with water, e.g. construction dust, plaster, stucco, mortar and cement.
- Always clean using a soft cloth.

Protection against (permanently) damp room air

Damp room air can lead to mould growth and corrosion caused by condensation.

Protect the hardware:

- Provide adequate ventilation for hardware, particularly during the construction phase.
- Intensively air out the room several times per day by opening all windows or balcony doors for approximately 15 minutes.

  If intensive airing is not an option, place the windows or balcony doors in the tilt position and provide airtight masking inside the room, e.g. if there is fresh screed that cannot be walked on or must not be exposed to drafts. Discharge any humidity present in the room air to the outside using condensation dryers.
- Establish a ventilation plan for more complex construction projects if necessary.
- Provide adequate ventilation during holiday periods as well.

13 Dismantling

WARNING

Improper dismantling may pose a risk of death!

The sash may fall during dismantling.

- Secure the sash to prevent it from falling, e.g. by using two people.
- Always have dismantling work performed by a specialist company.

CAUTION

Physical strain may cause injury and damage to health.

Carrying and lifting heavy loads for extended periods leads to physical injury in the long term.

- When carrying or lifting loads, maintain an ergonomically correct posture. The maximum permissible load is 25 kg for men and 10 kg for women.

INFO

Unless otherwise stated, dismantling is performed in reverse order to installation.

13.1 Handle

Removing the handle

1. Move the handle to the turn position (to the tilt position for TF).

2. Lift the escutcheon cover and turn it 90° [A].
   Undo the screws [B].
   Tool: Phillips screwdriver PH2

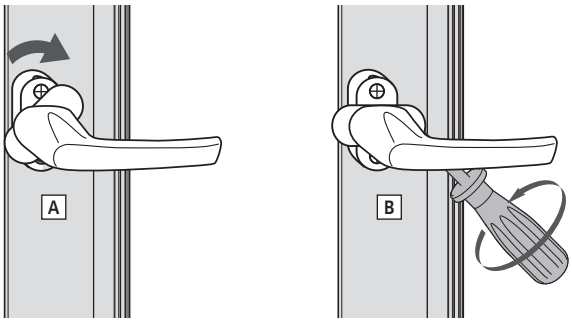

3. Remove the handle.

13.2 Flush-encased gearbox

Removing the flush-encased gearbox

1. Push the engaged clampable lugs towards the espagnolette and turn anticlockwise [C].
   Tool: flat-tip screwdriver 8 x 1.2 mm

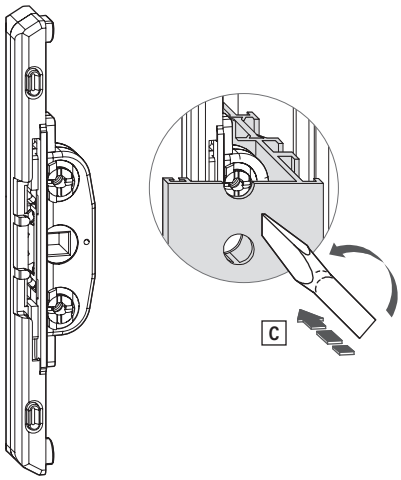

2. Remove the flush-encased gearbox by pulling it to the side.

13.3 Stay-bearing pin

Removing the stay-bearing pin

1. Open the sash.

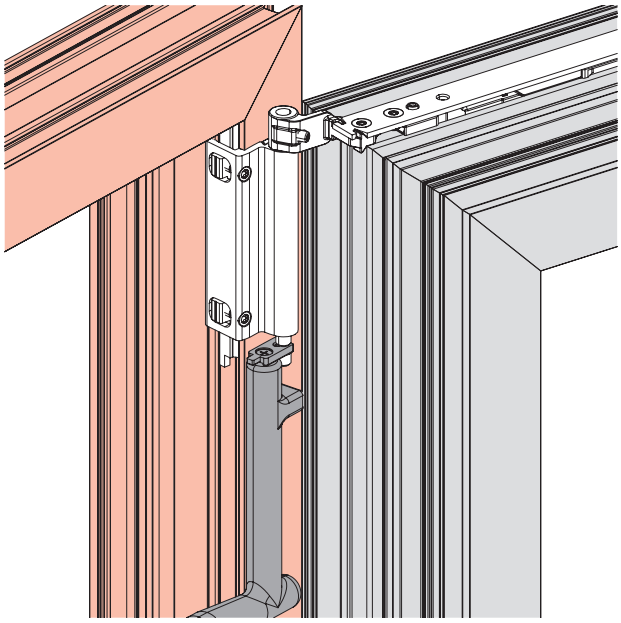

2. Undo the grub screw on the stay hinge.

3. Use the pulling tool to move the bearing pin outwards slightly from above.

INFO
Secure the sash to prevent it from falling.

4. Place the pulling tool against the bearing pin and remove the bearing pin by pulling it vertically downwards.

5. Tilt the sash with stay hinge away until the corner hinge is exposed enough to allow the sash to be lifted out of the pivot rest.

13.4 Tilt-Only stay arm

Removing the Tilt-Only stay arm

1. Push the retaining spring in the slider “view window” downwards and release the scissor stay arm from the slider.

INFO
Secure the sash to prevent it from falling.

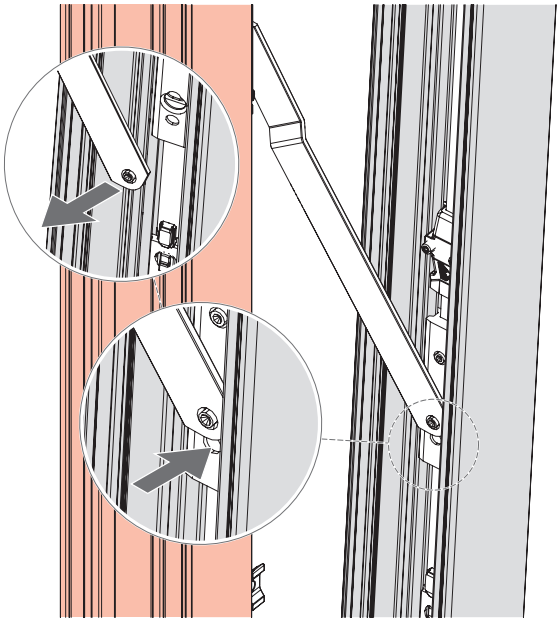

14 Transport

14.1 Transporting elements and hardware

DANGER

Improper transport poses a risk of death!

Improper procedures for transporting, loading or unloading elements may cause serious injuries and glass breakage as a result of the elements swinging open, falling or becoming overloaded.

- Note the applicable accident prevention regulations.
- Note force application points and reaction forces.
- Prevent the sash from opening uncontrollably.
- Avoid jerky movements.
- Use suitable transportation means and protective devices.
- Watch out for protruding components.
- Transport heavy loads with two people and use suitable transportation means (such as an industrial truck).

CAUTION

Trapped limbs may result in injuries.

The transported goods can skid, open, close or fall during transportation tasks. This can result in limbs being trapped and seriously injured.

- Never reach near the scissor stays.
- Close the sash after installation and secure it in place for transport.
- Wear safety gloves and protective footwear.

CAUTION

Physical strain may cause injury and damage to health.

Carrying and lifting heavy loads for extended periods leads to physical injury in the long term.

- When carrying or lifting loads, maintain an ergonomically correct posture. The maximum permissible load is 25 kg for men and 10 kg for women.

Hardware is supplied to the specialist company as complete sets. The components are packaged accordingly for each shipment. The instructions for safely transporting the hardware are described below.

Observe the following basic instructions when transporting hardware:

- Transport larger scopes of delivery using appropriate transportation means (such as industrial trucks).
- Note the transport weight in order to select appropriate transportation means.
- Immediately check the delivery for completeness and transport damage on receipt.

INFO

Submit a complaint about any defects as soon as they are identified. Claims for damages may only be made within the reclamation period.

Use the following transportation means for support when transporting, loading and unloading larger scopes of delivery:

- Industrial trucks, e.g. forklifts, telescopic handlers, pallet trucks

- Lifting equipment, e.g. transport nets, carry straps, round slings
- Protective devices, e.g. edge protection, spacer blocks

INFO
Industrial trucks and lifting devices may only be operated by qualified persons.

INFO
Lifting equipment and protective devices may only be used if they are in full working order.

14.2 Storing the hardware

Store all hardware components as follows until they are installed:

- Dry and protected
- On a level surface
- Protected against sunlight

14.3 Transport safety device

Transport safety device for flush-encased gearboxes with a handle without escutcheon.

Insert the transport safety device (included in the handle set) in the square hole after the flush-encased gearbox has been installed. Remove the transport safety device with the pull key before installing the handle.

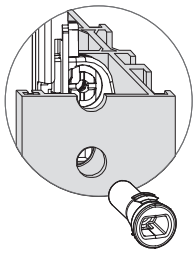

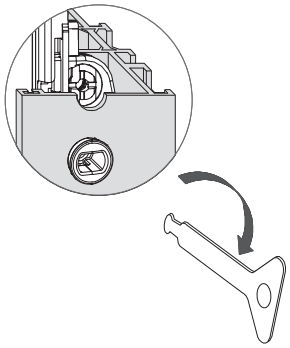

15 Disposal

ATTENTION

Incorrect disposal may pollute the environment.

Pieces of hardware are raw materials.

- Dispose of hardware for environmentally friendly material reutilisation as mixed scrap.

15.1 Disposing of packaging

The hardware is supplied as complete sets together with the packaging. Once unpacked, the installation company or builder is responsible for disposing of the packaging properly. The packaging materials are produced in accordance with current environmental protection standards. The materials can be recycled separately.

Follow the basic instructions below for the proper disposal of packaging:

- Do not dispose of packaging in household waste.
- Hand over packaging at local waste collection points or recycling centres.
- Observe the national regulations on the disposal of recyclable materials.
- Contact the local authorities if necessary.

15.2 Disposing of hardware

Once the hardware is finished with, the end user or builder is responsible for properly disposing of the windows, doors or balcony doors and the hardware, including any accessories. Hardware is produced in accordance with current environmental protection standards. The materials can be recycled separately.

Follow the basic instructions below for the proper disposal of hardware:

- Observe the information and specifications for disposal contained in the other applicable documents.
- Separate hardware components from windows, doors or balcony doors.
- Do not dispose of hardware in household waste.
- Hand over hardware at local waste collection points or recycling centres.
- Observe the national regulations on the disposal of recyclable materials.
- Contact the local authorities if necessary.

Roto Frank
Fenster- und Türtechnologie GmbH

Wilhelm-Frank-Platz 1
70771 Leinfelden-Echterdingen
Germany

Phone +49 (0) 711 7598 0
Fax +49 (0) 711 7598 253
info@roto-frank.com

www.roto-frank.com

From a single source: Optimum hardware systems to meet all challenges

Roto Tilt&Turn	The Tilt&Turn hardware system for windows and balcony doors
Roto Sliding	Hardware systems for large sliding windows and doors
Roto Door	Matching hardware technology everything about doors
Roto Equipment	Additional technology for windows and doors